NOT FOR CONSTRUCTION

CITY OF SHAWNEE, KANSAS
DEPARTMENT OF PUBLIC WORKS
CLEAR CREEK PARKWAY ROAD IMPROVEMENT PLANS
(FROM CLARE ROAD TO K–7 HIGHWAY)
SECTION 9, TOWNSHIP 12S, RANGE 23E
CITY PROJECT 3413

INDEX OF SHEETS

1	TITLE SHEET
2-6	RIGHT-OF-WAY PLANS
7	QUANTITIES (RECAPITULATION)
8-9	GENERAL NOTES, LAYOUT, & REFERENCE POINTS
10-13	TYPICAL SECTIONS
14-37	PLAN & PROFILES
38	ROUNDABOUT PLAN
39-45	INTERSECTION & ADA RAMP DETAILS
46-47	JOINT LAYOUT PLANS
48-50	GRADING PLANS
51-60	ROADWAY DETAILS
61-73	STORM SEWER PROFILES & DETAILS
74-78	REINFORCED CONCRETE BOX DETAILS
79-81	RETAINING WALL PLAN & PROFILES
82-85	RETAINING WALL DETAILS
86-96	STREET LIGHTING PLANS & DETAILS
97-107	PAVEMENT MARKING AND SIGNING PLANS & DETAILS
108-114	TRAFFIC CONTROL PLANS & DETAILS
115-120	EROSION CONTROL PLANS & DETAILS
121-123	SEEDING & SODDING PLANS & DETAILS
124-126	QUANTITIES (SUMMARY)
127-133	DRAINAGE AREA MAPS & CALCULATIONS
134-137	LANDSCAPING PLANS & DETAILS
138-172	CROSS SECTIONS (CLEAR CREEK PARKWAY)
173-176	CROSS SECTIONS (CART PATH)
177-179	CROSS SECTIONS (TRAIL CONNECTION)
180	CROSS SECTIONS (SOUTH CART PATH RECONSTRUCTION)
181	CROSS SECTIONS (SPECIAL DITCH ALONG CLARE ROAD)
182	CROSS SECTIONS (SPECIAL DITCH TO GOLF COURSE POND)

SHAFER, KLINE & WARREN
11250 Corporate Avenue
Lenexa, KS 66219-1392
913.888.7800 FAX: 913.888.7868
SURVEYING | ENGINEERING | CONSTRUCTION

GRADING
DRAINAGE
SURFACING
PAVEMENT MARKING
SIGNING
STREET LIGHTING
SEEDING
SODDING

I hereby certify that this project has been designed, and these plans prepared, to meet or exceed the design criteria of Shawnee, Kansas, in current usage except as indicated below.

Summary Of Design Criteria Exceptions

Number #	Station sta	Offset feet	Side text	Roadway text	Comments text
1	49+28.11	14.69	Lt	Clare Road	Shallow(3.5' Depth) Area Inlet #102
2	60+29.54	25.50	Lt	Clear Creek Pkwy	Shallow(7.5' Depth) Curb Inlet #903
3	60+29.54	25.50	Rt	Clear Creek Pkwy	Shallow(7.5' Depth) Curb Inlet #902

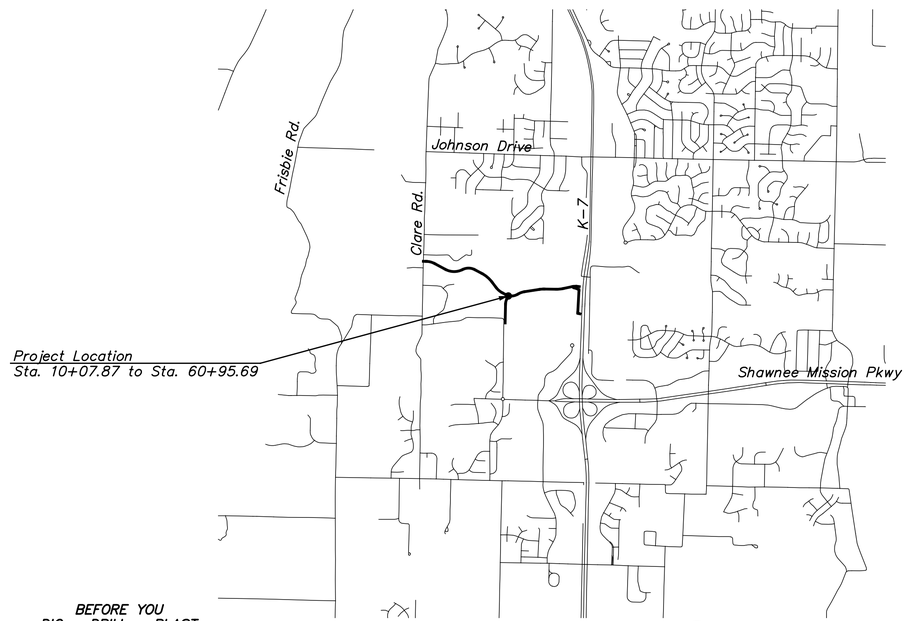

LOCATION MAP
NOT TO SCALE

BEFORE YOU
DIG – DRILL – BLAST
Call 1–800–344–7233
KANSAS ONE CALL SYSTEM, INC.

Engineer: Paul R. Parks, Jr., P.E. — Date

PAUL R. PARKS, JR. LICENSED 13914 KANSAS PROFESSIONAL ENGINEER

Approved By: City of Shawnee

Doug Wesselschmidt, P.E., City Engineer — Date

DESIGN DESIGNATION

Design Classification = Major Collector
Design Speed, V = 35 mph at Clear Creek Parkway
V = 25 mph at Roundabout
Posted Speed, V = 30 mph at Clear Creek Parkway
V = 20 mph at Roundabout
Control of Access (C of A) = None
Clear Zone = 6 feet with Curb & Gutter
Minimum SSD (Crest) = 250 Feet
Minimum SSD (Sag) = 250 Feet
Minimum K (Crest) = 29 at Clear Creek Parkway
12 at Roundabout
Minimum K (Sag) Without Lighting = 49 at Clear Creek Parkway
26 at Roundabout
Maximum Grade = 10%
Minimum Grade = 1%
Curb Return Radii = 35 feet to Back of Curb

Bicycle Design Speed, V = 12 mph
Bicycle Lean Angle = 15 degrees
Bicycle Minimum Radius = 36 feet

Beginning of Project = Sta. 10+05.65
End of Project = Sta. 60+95.69
Gross Length of Project = 5090.04 feet
Exceptions = 0.00 feet
Net Length of Project = 5,090.04 feet = 0.964 Miles
Net Length of Bridge = 0.00 feet
Net Length of Road = 5,090.04 feet = 0.964 Miles

Legend

BM Benchmark
BORING Boring Hole
CFB Cable @ Face of Building
LPCB Light Pole with Concrete Base
EM Drain Inlet
HYD Electric Meter
Fire Hydrant
Flag Pole
GA Guy Anchor
GMH Gas Manhole
GFB Gas @ Face of Building
GR Gas Filler Cap
GM Gas Riser
GUY Gas Meter
GREG Guy Pole
GV Gas Regulator
Grave Marker
Gas Valve
Gas Vent Pipe
CATV Buried Cable TV
G Buried Gas
Construction Limit (C.L.)

K.C.P&L Kansas City Power & Light Manhole
Light Pole
SIGN Lighted Sign
MH Mailbox
PB Manhole
PFB Pipe Ballard
PIV Power @ Face of Building
PM Post Indicator Valve
Parking Meter
Power Pole
Power Pole with Light
Power Pole & Transformer
P RISER Power Riser
Pay Telephone
RD Roof Drain
SCO Sewer Cleanout
SCV Sprinkler Control Valve
SAT Satellite Dish
STORM Sewer Manhole
Storm Manhole
UP Buried Power
P Overhead Power
W Buried Water

Sewer Vent Pipe
S.W.B.T. Southwestern Bell Telephone Manhole
PED Telephone Pedestal
TFB Telephone @ Face of Building
TMH Telephone Manhole
Telephone Pole
T RISER Telephone Riser
Traffic Signal Pole
SIGN Traffic Sign
TVPED Television Pedestal
UMH Unknown Manhole
Water Face Building

WM Water Meter
WM Water Meter Manhole
WV Water Valve
YL Yard Light
S Buried Sewer
T Buried Telephone
Existing TreeLine
X Existing Fence

Utility Contacts

Utility Type	Company Information	Name	Title/Role	Work Phone	Mobile Phone	Email Address
Electric	Westar Energy	Greg Roy	Technical Specialist Design	785-575-8167	785-554-5489	greg.roy@westarenergy.com
Electric	Westar Energy	Jim Godbout	Senior Technical Specialist Design	913-667-5119	913-624-4756	jimmy.godbout@westarenergy.com
Water	WaterOne	Josh Vincent, PE	Lead Development Engineer	913-895-5766		jvincent@waterone.org
Sanitary Sewer	Johnson County Wastewater (JCW)	Matt Mathew	JCW Consultant	913-715-8530		matt.matthew@jocogov.org
KDOT R/W	Kansas Dept. of Transportation	Martin Thomas	Utility Coordinator	913-764-4525	816-289-3826	mthomas@ksdot.org

LAYOUT: MODEL | BY: jadams | DATE: 20-SEP-2016 10:09:52 AM
L:\150561-010_Cad\Civil\Cover Sheet\150561-010_TITLE.dgn

NOT FOR CONSTRUCTION

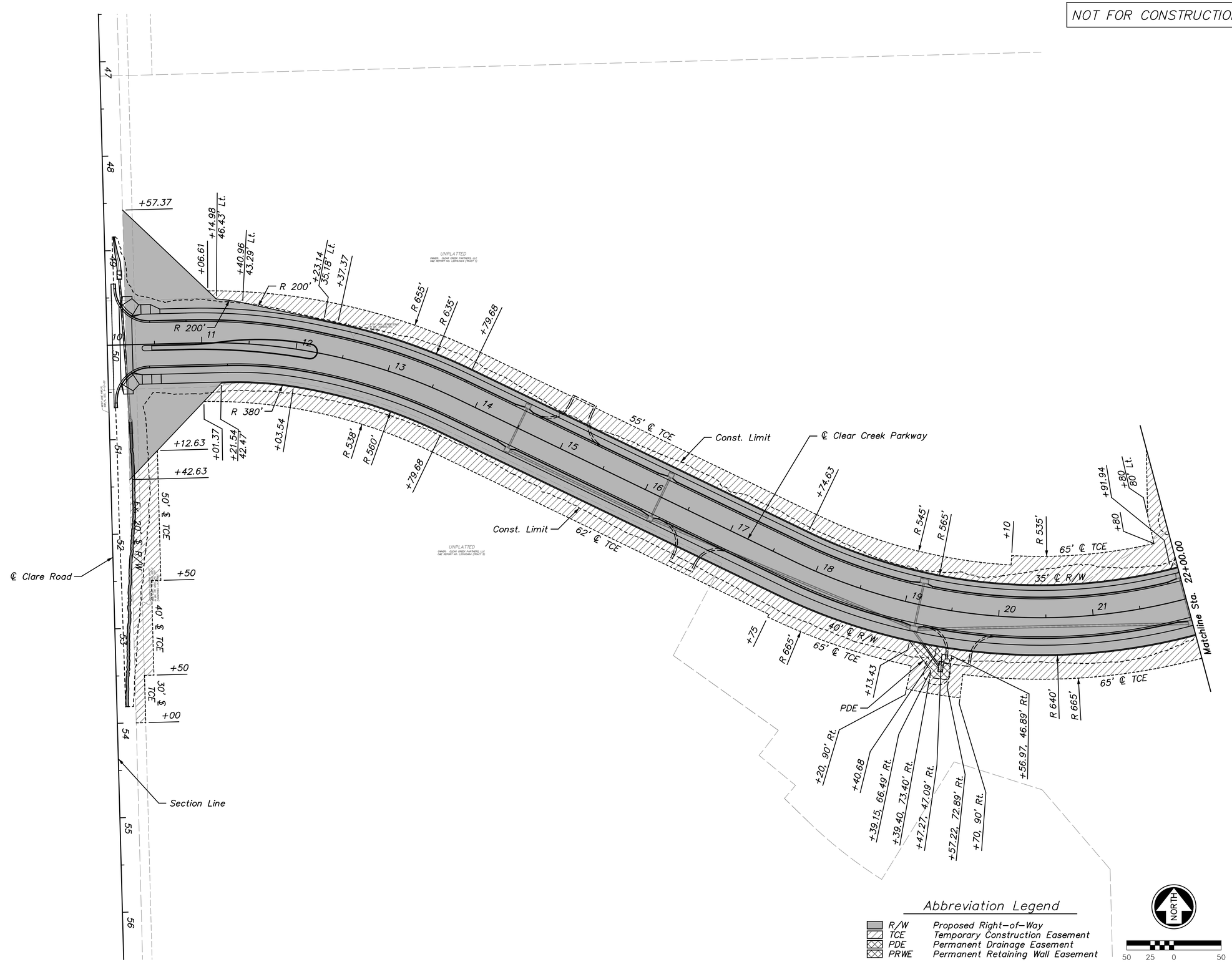

Abbreviation Legend

R/W	Proposed Right-of-Way
TCE	Temporary Construction Easement
PDE	Permanent Drainage Easement
PRWE	Permanent Retaining Wall Easement

REV.	DATE	REVISIONS	BY	APP'D
1				
2				
3				
4				
5				

Designed By: PRP
Drawn By: JCK/JAA
Checked By: HDL
Issue Date: SEPT. 2016

COPYRIGHT © -2016-SHAFER, KLINE & WARREN INC.

SHAFER, KLINE & WARREN
11250 Corporate Avenue
Lenexa, KS 66219-1392
913.888.7800 FAX: 913.888.7868
SURVEYING | ENGINEERING | CONSTRUCTION

CLEAR CREEK PARKWAY
CITY OF SHAWNEE, KANSAS

RIGHT OF WAY PLAN (1)
STA. 10+00.00 TO STA. 22+00.00

150561-010

SHEET NO.
2 OF 182

LAYOUT: MODEL | BY: jadams | DATE: 20-SEP-2016 10:10:07 AM
L:\150561-010_Cad\Civil\Right of Way\150561-010_ROW-01.dgn

NOT FOR CONSTRUCTION

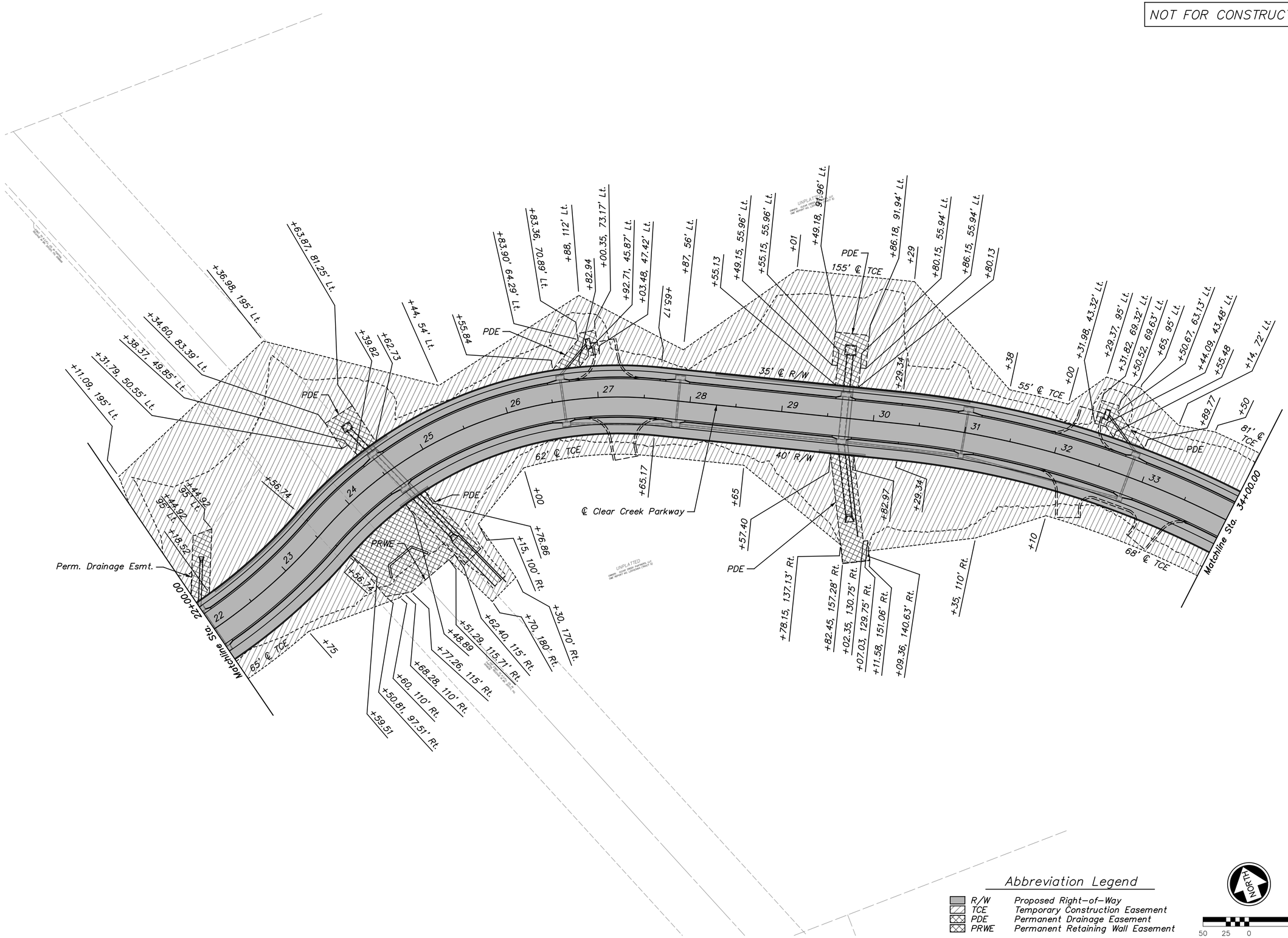

REV.	DATE	REVISIONS	BY	APP'D
1				
2				
3				
4				
5				

Designed By: PRP
Drawn By: JCK/JAA
Checked By: HDL
Issue Date: SEPT. 2016

COPYRIGHT © -2016-SHAFER, KLINE & WARREN INC.

SHAFER, KLINE & WARREN
11250 Corporate Avenue
Lenexa, KS 66219-1392
913.888.7800 FAX: 913.888.7868
SURVEYING | ENGINEERING | CONSTRUCTION

CLEAR CREEK PARKWAY
CITY OF SHAWNEE, KANSAS

RIGHT OF WAY PLAN (2)
STA. 22+00.00 TO STA. 34+00.00

150561-010

LAYOUT: MODEL | BY: jadams | DATE: 20-SEP-2016 10:10:10 AM
L:\150561-010_Cad\Civil\Right of Way\150561-010_ROW-02.dgn

NOT FOR CONSTRUCTION

Matchline Sta. 34+00.00

Matchline Sta. 45+50.00

+07, 81' Lt.
R 1035'
+50
+73.66
+55, +15.13
TCE
+19.70
+25, 59.76' Lt.
+25, 77' Lt.
+33.43, 69.59' Lt.
+37.50, 43.59' Lt.
+53.43, 69.59' Lt.
+61, 77' Lt.
+53.43, 43.59' Lt.
+91.11
35' ℄ R/W
R 932'
68' ℄ TCE
R 960'
+66.09
64' ℄ TCE
R 565'
R 540'
+50.62
+86.63, 51.30' Lt.
+85.02
+82.98, 70.97' Lt.
+93.03, 52.49' Lt.
+94, 73.01' Lt.
+94, 95' Lt.
+00.37
+13.15, 56.21' Lt.
+12.48, 76.43' Lt.
+16.12, 56.76' Lt.
+22.07
+69.18, 55.03' Lt.
+80, 160' Lt.
+94, 131' Lt.
+13, 234' Lt.
+20, 181' Lt.
+19, 142' Lt.
+55, 249' Lt.
+45, 212' Lt.
+46.34, 116.32' Lt.
+79, 220' Lt.
+28.15, 107.96' Lt.
+02.13, 201.32' Lt.
+00.89, 194.97' Lt.
+96, 225' Lt.
+08.24, 182.51' Lt.
+47.34, 127.48' Lt.
+05, 158' Lt.
+90, 109' Lt.
+23, 128' Lt.
Const. Limit
55' ℄ TCE
PDE
R 37'
+36.30
+90.11
R 664'
+50.06
R 640'
40' ℄ R/W
Const. Limit
+70, 83' Rt.
+50.62
+16.58
+46.20
R 25'
+68.55, 53.79' Rt.
+83.95, 97.50' Rt.
+81.63, 139.57' Lt.
+14.26, 167.15' Rt.
+16.35, 171.97' Rt.
+26.20, 167.69' Rt.
+12.48, 35.13' Rt.
+73.72
+78.87, 56.98' Rt.
+05.76
+65, 102' Rt.
+78
+60, 89' Rt.
+84.30
+97.42
PDE
℄ Clear Creek Parkway
℄ Gleason Road
+97.42
117' TCE
R 717'
R 308'
+22
+82.40
+58.61'
+78
R 390'
R 364'
℄ PRWE
35' ℄ R/W
R 635'
40' ℄ R/W
66' ℄ PRWE
100
42
41
0
1
2
3
4
5
98
97
96
45
44
43
TRACT "B" SHAWNEE GOLF & COUNTRY CLUB
TRACT "A" SHAWNEE GOLF & COUNTRY CLUB
UNPLATTED

Abbreviation Legend

R/W	Proposed Right-of-Way
TCE	Temporary Construction Easement
PDE	Permanent Drainage Easement
PRWE	Permanent Retaining Wall Easement

NORTH

50 25 0 50

REV.	DATE	REVISIONS	BY	APP'D
1				
2				
3				
4				
5				

Designed By: PRP
Drawn By: JCK/JAA
Checked By: HDL
Issue Date: SEPT. 2016

COPYRIGHT © -2016-SHAFER, KLINE & WARREN INC.

SHAFER, KLINE & WARREN
11250 Corporate Avenue
Lenexa, KS 66219-1392
913.888.7800 FAX: 913.888.7868
SURVEYING | ENGINEERING | CONSTRUCTION

CLEAR CREEK PARKWAY
CITY OF SHAWNEE, KANSAS

RIGHT OF WAY PLAN (3)
STA. 34+00.00 TO STA. 45+50.00

150561-010

LAYOUT: MODEL | BY: jadams | DATE: 20-SEP-2016 10:10:12 AM
L:\150561-010_Cad\Civil\Right of Way\150561-010_ROW-03.dgn

NOT FOR CONSTRUCTION

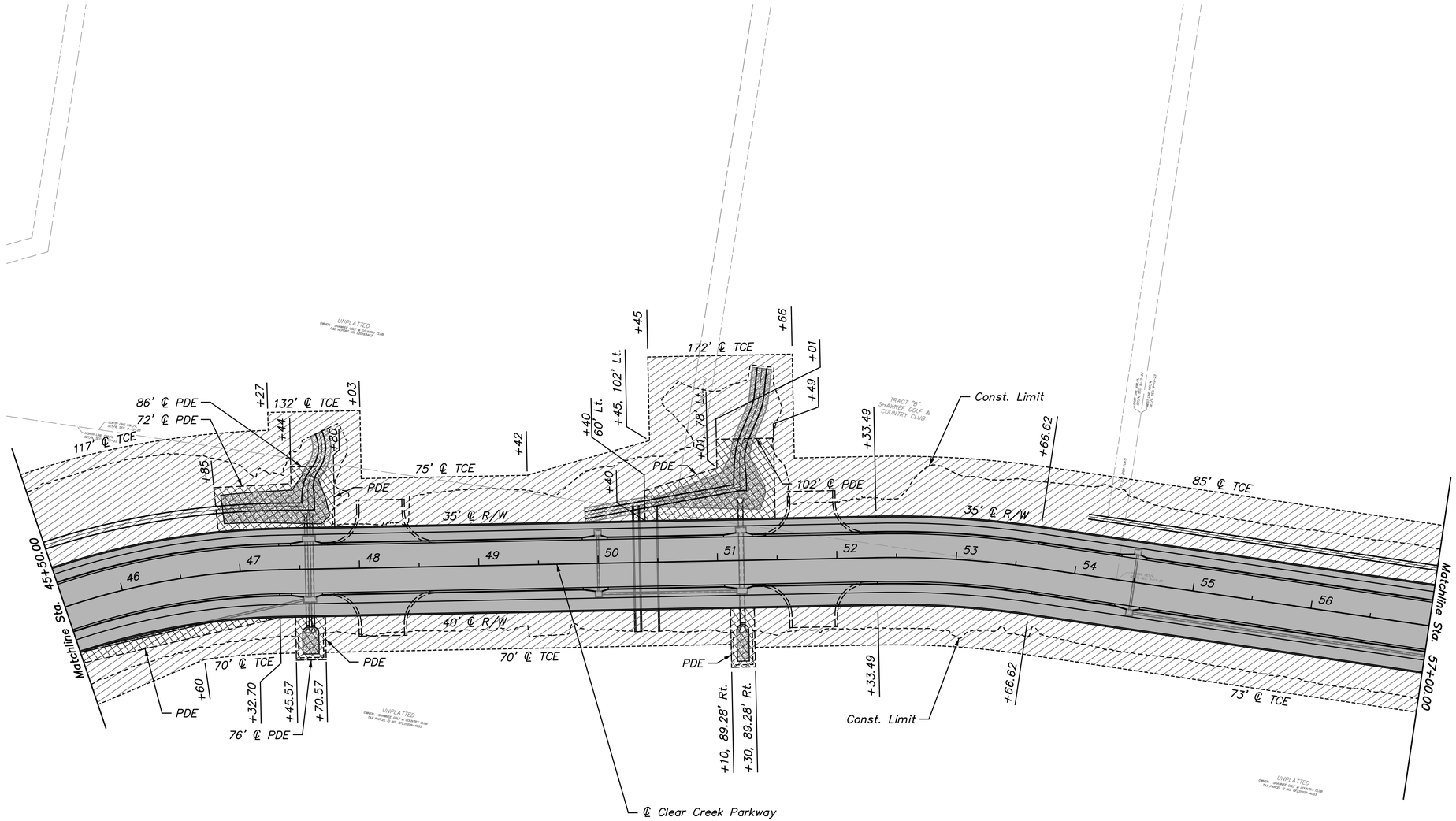

Abbreviation Legend

R/W	Proposed Right-of-Way
TCE	Temporary Construction Easement
PDE	Permanent Drainage Easement
PRWE	Permanent Retaining Wall Easement

NORTH

50 25 0 50

REV.	DATE	REVISIONS	BY	APP'D
1				
2				
3				
4				
5				

Designed By: PRP
Drawn By: JCK/JAA
Checked By: HDL
Issue Date: SEPT. 2016

COPYRIGHT © -2016-SHAFER, KLINE & WARREN INC.

SHAFER, KLINE & WARREN
11250 Corporate Avenue
Lenexa, KS 66219-1392
913.888.7800 FAX: 913.888.7868
SURVEYING | ENGINEERING | CONSTRUCTION

CLEAR CREEK PARKWAY
CITY OF SHAWNEE, KANSAS

RIGHT OF WAY PLAN (4)
STA. 45+50.00 TO STA. 57+00.00

150561-010

LAYOUT: MODEL | BY: jadams | DATE: 20-SEP-2016 10:10:14 AM
L:\150561-010_Cad\Civil\Right of Way\150561-010_ROW-04.dgn

NOT FOR CONSTRUCTION

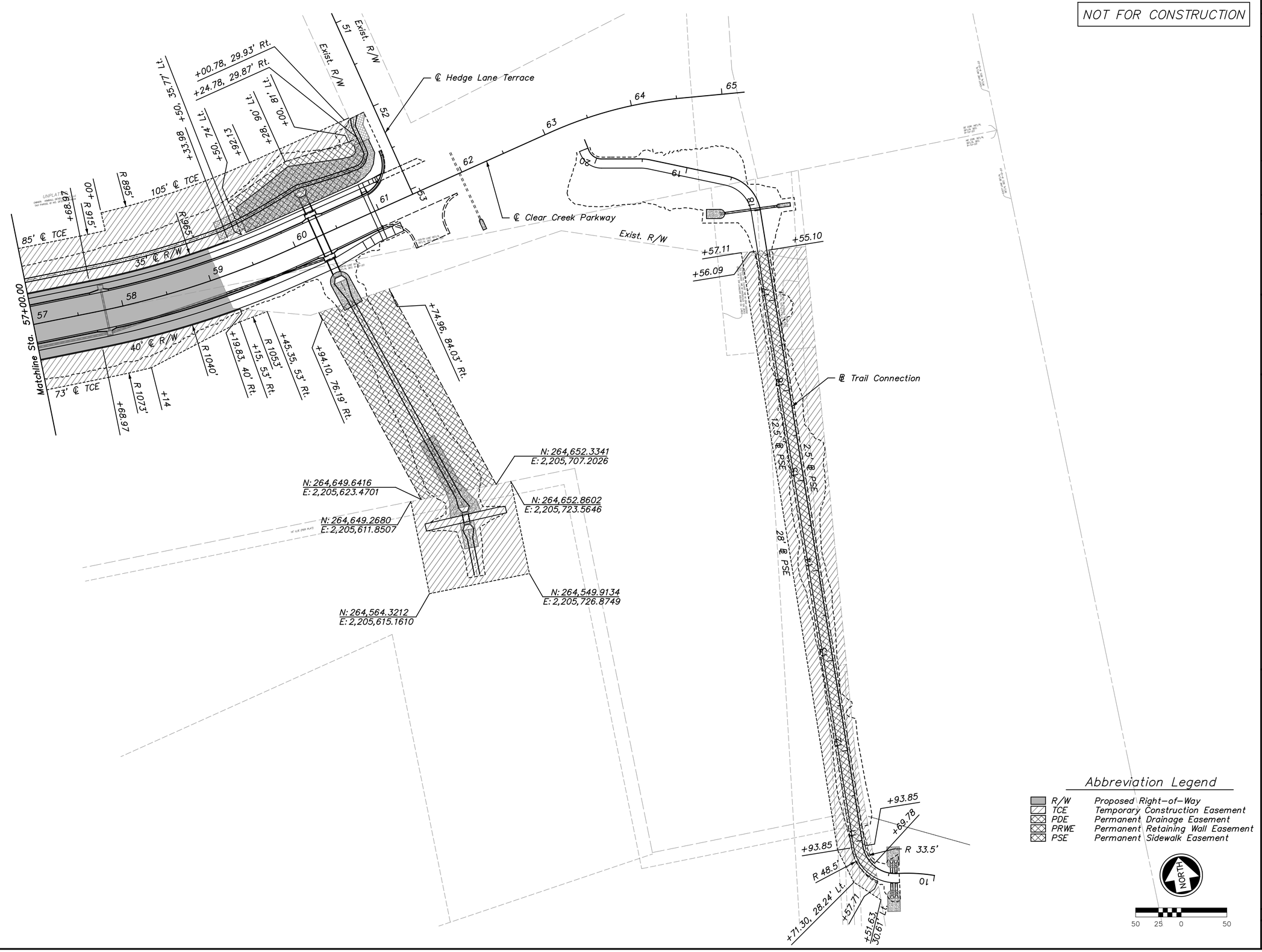

REV.	DATE	REVISIONS	BY	APP'D
5				
4				
3				
2				
1				

Designed By: PRP
Drawn By: JCK/JAA
Checked By: HDL
Issue Date: SEPT. 2016

COPYRIGHT © -2016-SHAFER, KLINE & WARREN INC.

SHAFER, KLINE & WARREN
11250 Corporate Avenue
Lenexa, KS 66219-1392
913.888.7800 FAX: 913.888.7868
SURVEYING | ENGINEERING | CONSTRUCTION

CLEAR CREEK PARKWAY
CITY OF SHAWNEE, KANSAS

RIGHT OF WAY PLAN (5)
STA. 57+00.00 TO STA. 60+95.69

150561-010

SHEET NO.
6 OF 182

LAYOUT: MODEL | BY: jadams | DATE: 20-SEP-2016 10:10:16 AM
L:\150561-010_Cad\Civil\Right of Way\150561-010_ROW-05.dgn

NOT FOR CONSTRUCTION

CLEAR CREEK PARKWAY
CITY OF SHAWNEE, KANSAS

GENERAL NOTES &
RECAPITULATION OF QUANTITIES

SHAFER, KLINE & WARREN
11250 Corporate Avenue
Lenexa, KS 66219-1392
913.888.7800 FAX: 913.888.7868
SURVEYING | ENGINEERING | CONSTRUCTION

Designed By: PRP
Drawn By: JCK/JAA
Checked By: HDL
Issue Date: SEPT. 2016

REV.	DATE	REVISIONS	BY	APP'D
5				
4				
3				
2				
1				

COPYRIGHT © -2016-SHAFER, KLINE & WARREN INC.

NOT FOR CONSTRUCTION

GENERAL NOTES

1. The construction covered by these plans shall conform to the current applicable standards and specifications of the APWA, Policy of the Kansas City Metropolitan Chapter of APWA and the Public Works Department of the City of Shawnee, Kansas.

2. All workmanship and materials shall be subject to the inspection and approval by the City of Shawnee, Kansas.

3. The geological and subsurface information shown on these plans represents the best information available to Shafer, Kline & Warren, Inc. No guarantee that subsurface conditions are in accordance with this information is implied or intended. The Contractor shall verify all information in the field.

4. The utility locations shown on these plans are taken from utility company records and are approximate only. They do not constitute actual field locations. The Contractor shall verify the location and depth of all utilities prior to construction.

5. The Contractor shall be responsible for excavating conflicting utilities.

6. Lineal foot measurements shown on the plans are horizontal measurements, not slope measurements. All payments shall be made on horizontal measurements.

7. The locations of all storm sewer structures shown on these plans are to the center of manholes, junction boxes, and inlets, unless otherwise shown. All stationing shown is centerline stationing, unless otherwise shown on the plans.

8. Contractor shall verify location and flowlines of sanitary sewer lines before beginning excavation for storm sewer.

9. See cross sections for pavement slope transitions, grading transitions and driveway profiles, unless otherwise stated.

10. Clearing and Grubbing shall conform to APWA Section 2101. All the requirements of the Kansas City Metropolitan Chapter of the American Public Works Association, Standard Specification and Design Criteria (APWA) as amended and supplemented by the City of Shawnee, Kansas Public Works Department apply, unless otherwise specified.

11. All waste material resulting from the project not designated for use in future phases shall be disposed of off-site by the Contractor.

12. All excavation shall be unclassified. No separate payment will be made for Rock Excavation.

13. Sub grade soils for all structures, regardless of the type or location

    a. Shall be firm, dense, thoroughly compacted and consolidated
    b. Shall be free from muck and mud
    c. Shall be sufficiently stable to remain firm and intact under the feet of the workmen or machinery engaged in sub grade surfacing, laying reinforcing steel and depositing concrete thereon.

    Confirmation of meeting said conditions shall be at the sole discretion of the Inspector, Engineer or Representative. In all cases where subsoil is mucky or works into mud or muck during such operations, a seal course of either concrete or rock shall be placed below sub grade to provide a firm base for working and for placing the floor slab.

14. The Contractor shall control the erosion and siltation during construction and shall keep the streets clean of mud and debris. The Contractor's erosion control measures shall conform to the City of Shawnee, Kansas erosion and sediment control specifications, a copy of which shall be obtained and kept on site at all times. It shall be the Contractor's responsibility to control erosion and prevent pollution for all work which they are directly involved.

15. Existing roadway pavement shall be excavated and wasted at sites off of project with the following exception. Existing pavement, curb and related surfacing materials may be placed as rock filler for the embankment. Material may only be placed in fill sections provided there is room for available drainage via the side slopes. The side slopes shall receive a twelve inch (12") cover material that will support vegetation. Rock fill will not be allowed in the top two feet (2') of the embankment.

    NOTE: Contractor must submit plans and details depicting any such placement to the City of Shawnee, Kansas Public Works Department.

16. The Contractor is hereby advised that no Federally owned mailbox may be disturbed. The Contractor shall give at least (24) twenty-four hours advance notice to the manager of delivery and collections. Tampering with Federal mail facilities may subject the Contractor to prosecution by the Federal Government.

17. All trees, shrubs, bushes, and brush, within the grading limits marked with an "X" on the plans, shall be removed by the Contractor. Large trees, that are not within the construction easements shown on the plans, shall be brought to the attention of the Engineer prior to disturbance. Exceptionally good trees shall be spared by adjusting grading during construction, as directed by the Engineer. All trees, within the construction limits, to be saved shall have their trunks physically protected, prior to construction operations, by methods approved by the Engineer.

18. Contractor shall backfill storm sewer structures with flowable fill when located under pavements which includes sidewalks.

19. The Contractor shall be responsible for maintaining all traffic signage during the progress of the project. Signs that are in conflict with the proposed improvements shall be removed and replaced by the Contractor in accordance with the Manual of Uniform Traffic Control Devices (MUTCD).

20. The Contractor shall adhere to the provisions of the State of Kansas that requires that any person or firm doing excavation on public right-of-way may do so only after giving notice to, and obtaining information from, utility companies. State law requires 48 hours advance notice. The names and telephone numbers of utility companies, even if only remotely involved with this project are located on the Title Sheet.

    The Contractor may also utilize the following toll free phone number provided by "Kansas One Call System, Inc.": 1-800-344-7233. This phone number is applicable anywhere within the State of Kansas. Prior to commencement of work, the Contractor shall notify all those companies which have facilities in the near vicinity of the construction to be performed.

21. The City of Shawnee's plan review is only for general conformance with the City of Shawnee Design and Construction Manual. The approval of these improvement plans shall not be construed to be an approval of any violation of the City of Shawnee's municipal code, including building and zoning codes, and any other city ordinance. The City of Shawnee is not responsible for the accuracy and adequacy of the design, or dimensions and elevations, which shall be confirmed and correlated at the project site. The City of Shawnee through its approval of these improvement plans assumes no responsibility other than as stated above for accuracy and completeness.

22. The Contractor shall have one (1) signed copy of the improvement plans, approved by the City of Shawnee, at the project site at all times. If the Contractor is working without approved plans at the site, the City Engineer will give forty-eight (48) hour notice to the Contractor. If the Contractor does not have approved plans on-site within forty-eight (48) hours, the public improvement permit for the project will be suspended and no work shall be completed until a set of approved plans is delivered to the site.

23. The construction of the improvements shown or implied by these plans shall not be initiated, or any part thereof undertaken, until the City Engineer is notified of such intent, and all required permits and fees, properly executed bonds, and contract agreements are received and approved by the City Engineer.

24. The Shawnee Design and Construction Manual shall govern the construction of all public improvements for this project.

25. All traffic control devices shall comply with the standards and specifications of the Manual on Uniform Traffic Control (MUTCD), latest edition.

26. Work hours shall be 8:00am to 6:00pm Monday - Friday. Work on Saturday and/or extended hours is allowed when requested forty-eight (48) hours in advance and approved by the City Engineer. The Contractor shall not work Sundays or holidays observed by the City of Shawnee.

27. The Contractor shall contact the City Inspector at least forty-eight (48) hours in advance to schedule a required inspection.

28. All existing utilities indicated on these improvement plans are according to the best information available to the Engineer of Record; however, all utilities actually existing may not be shown. Utilities damaged through the negligence of the Contractor to obtain the location of the same shall be repaired or replaced at the expense of the Contractor.

29. All utilities crossing beneath the pavement shall be installed or a casing pipe provided prior to placement of curbs and/or pavement. The Contractor shall provide a utility crossing plan to the Inspector prior to placing curbs.

30. All storm sewers crossing beneath a proposed street shall be in place, or a casing pipe provided for their future installation prior to the placement of curbs or pavement along the street. All excavations for such storm sewers or casing pipe shall be completely backfilled with flowable fill to a minimum distance of four (4) feet behind both curbs or two (2) feet beyond sidewalks and trails.

31. Sidewalks are shown on the plans for information purposes only unless otherwise noted. All common space sidewalks shall be installed as part of the street improvements. Although sidewalks may not be built as part of this project, the Contractor shall be responsible for sidewalk ramp construction. All sidewalk ramp locations must be staked when placing curb so that curb depressions are located per plan.

32. The street Contractor shall be responsible for repairing all settlement and damage to the curbs, pavement, and sidewalks during the two-year maintenance period.

33. All siltation and erosion control measures specified on the plans shall be in place prior to commencing any land disturbance activities within the site. Refer to the approved land disturbance plans for siltation and erosion control requirements. Additionally all land disturbance work shall be in compliance with the land disturbance permit.

34. All concrete for the project shall comply with the standards and specifications of the Kansas City Metropolitan Materials Board (KCMMB). All structural and nonstructural concrete shall have 28-day compressive strength of 5,000 psi and 4,000 psi respectively.

REV.	DATE	REVISIONS	BY	APP'D
1				
2				
3				
4				
5				

COPYRIGHT © -2016-SHAFER, KLINE & WARREN INC.

Designed By: PRP
Drawn By: JCK/JAA
Checked By: HDL
Issue Date: SEPT. 2016

SHAFER, KLINE & WARREN
11250 Corporate Avenue
Lenexa, KS 66219-1392
913.888.7800 FAX: 913.888.7868
SURVEYING | ENGINEERING | CONSTRUCTION

CLEAR CREEK PARKWAY
CITY OF SHAWNEE, KANSAS

GENERAL NOTES

150561-010

LAYOUT: MODEL | BY: jadams | DATE: 20-SEP-2016 10:10:20 AM
L:\150561-010_Cad\Civil\General Layout\150561-010_G-NOTES-01.dgn

NOT FOR CONSTRUCTION

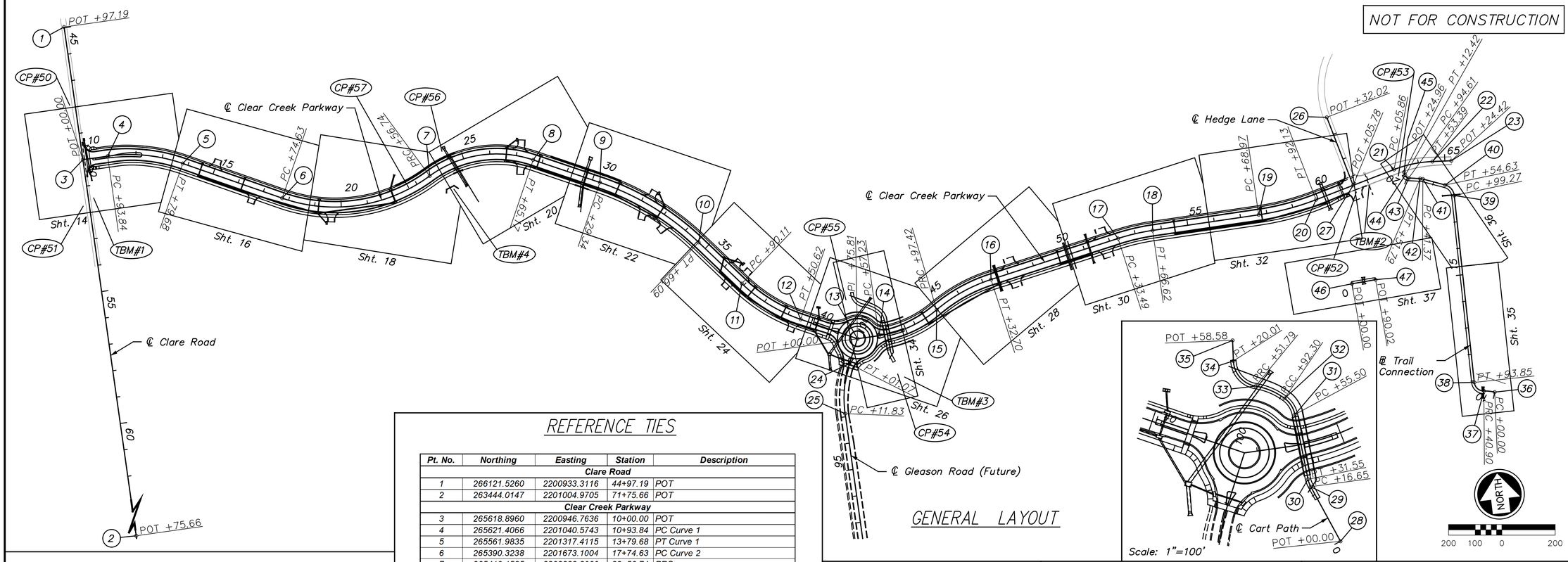

GENERAL LAYOUT

REFERENCE TIES

Pt. No.	Northing	Easting	Station	Description
Clare Road				
1	266121.5260	2200933.3116	44+97.19	POT
2	263444.0147	2201004.9705	71+75.66	POT
Clear Creek Parkway				
3	265618.8960	2200946.7636	10+00.00	POT
4	265621.4066	2201040.5743	10+93.84	PC Curve 1
5	265561.9835	2201317.4115	13+79.68	PT Curve 1
6	265390.3238	2201673.1004	17+74.63	PC Curve 2
7	265410.1585	2202232.3000	23+56.74	PRC
8	265425.8880	2202624.8776	27+65.17	PT Curve 3
9	265313.2605	2202863.8289	30+29.34	PC Curve 4
10	265048.0004	2203206.4352	34+66.09	PT Curve 4
11	264875.7373	2203349.6508	36+90.11	PC Curve 5
12	264717.2409	2203553.8196	39+50.62	PT Curve 5
13	264620.7055	2203757.2714	41+75.81	PI
14	264622.7852	2203838.6648	42+57.23	PC Curve 6
15	264694.6617	2204064.5083	44+97.42	PRC
16	264784.5402	2204280.3137	47+32.70	PT Curve 7
17	264883.3274	2204771.2589	52+33.49	PC Curve 8
18	264898.6338	2204903.3590	53+66.62	PT Curve 8
19	264911.5648	2205305.4938	57+68.97	PC Curve 9
20	264943.4621	2205525.8958	59+92.13	PT Curve 9
21	265022.6932	2205829.4619	63+05.86	PC Curve 10
22	265036.0960	2205975.7191	64+53.39	PT Curve 10
23	265030.9487	2206046.5550	65+24.42	POT
Gleason Road				
24	264530.5799	2203716.4778	99+01.07	PT Curve 11
25	264346.6618	2203679.2442	97+11.83	PC Curve 11
Hedge Lane				
26	265245.9713	2205600.9084	50+32.02	POT
27	264981.0849	2205670.0440	53+05.78	POT
Cart Path				
28	264435.3551	2203917.4111	0+00.00	POT
29	264543.4891	2203873.6617	1+16.65	PC Curve 12
30	264557.9299	2203870.1981	1+31.55	PT Curve 12
31	264681.4170	2203859.5092	2+55.50	PC Curve 13
32	264713.7376	2203843.7258	2+92.30	PCC Curve 14
33	264742.7400	2203792.4041	3+51.79	PRC Curve 15
34	264794.4803	2203756.3653	4+20.01	PT Curve 15
35	264832.9374	2203759.2109	4+58.58	POT
Trail Connection				
36	264149.6736	2206109.4520	10+00.00	PC Curve 16
37	264158.5703	2206069.6251	10+40.90	PRC Curve 17
38	264194.6245	2206037.4704	10+93.85	PT Curve 17
39	264900.0205	2206042.5658	17+99.27	PC Curve 18
40	264943.1645	2206013.3943	18+54.63	PT Curve 18
41	264974.8956	2205932.6645	19+41.37	PC Curve 19
42	264977.6737	2205922.6363	19+51.79	PT Curve 19
43	264984.7486	2205880.4114	19+94.61	PC Curve 20
44	264996.3065	2205868.2432	20+12.42	PT Curve 20
45	265008.5561	2205865.5370	20+24.96	POT
South Cart Path				
46	264614.5390	2205623.5070	0+00	POT
47	264619.7880	2205713.3745	0+90.02	POT

PROJECT BENCHMARKS

TBM #1
Exist spike step in S side power pole 420' +/- S of 6020 Clare Rd. on E side of Clare Rd.
N 265471.2953
E 2200970.5160
Elev. 929.43

TBM #2
"a" cut on ctr FF of curb inlet on S side of Clear Creek Parkway @ intersection of Hedge Lane Terr.
N 264974.4516
E 2205729.9650
Elev. 835.57

TBM #3
"a" cut on ctr W side on conc pad to brick restroom building
N 264457.6013
E 2203916.6740
Elev. 839.99

TBM #4
80 pny spike step in N side of E pole of cross country power line 1st pole S of proposed Clear Creek Parkway
N 265350.0754
E 2202317.2460
Elev. 872.99

JOCO 412
Standard 2" Dome Top Aluminum. SW Corner Headwall
N 266374.2561
E 2206250.6690
Elev. 840.90

JOCO 414
Standard 2" Dome Top Aluminum. SW Corner Hubguard
N 263296.2874
E 2200998.2800
Elev. 847.70

CONTROL POINTS

CP #50
1/2" IB w/ cap
N 265827.9097
E 2200920.5580
Elev. 926.95

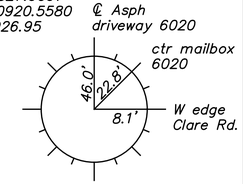

CP #51
1/2" IB w/ cap
In line w/ gravel drive on E side of Clare
N 265445.1844
E 2200927.7710
Elev. 926.45

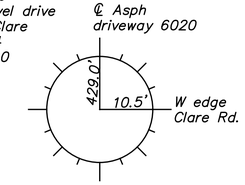

CP #52
mag and shiner
in ctr conc walk 2.0'
W to ℄ Hedge Lane Terrace
N 264954.6831
E 2205678.9970
Elev. 835.15

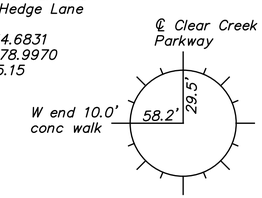

CP #53
mag and shiner
in ctr conc walk
@ PC
N 264997.6333
E 2205842.8840
Elev. 838.75

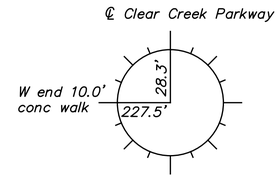

CP #54
1/2" IBPC
N 264471.7414
E 2203892.1230
Elev. 840.62

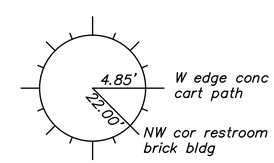

CP #55
1/2" IBPC
N 264771.3195
E 2203730.7590
Elev. 858.52

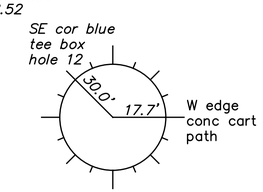

CP #56
1/2" IBPC
N 265497.3112
E 2202288.3590
Elev. 887.76

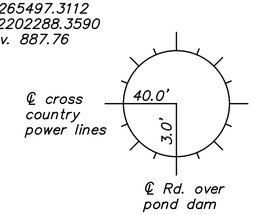

CP #57
1/2" IBPC
N 265376.7383
E 2202148.4980
Elev. 889.35

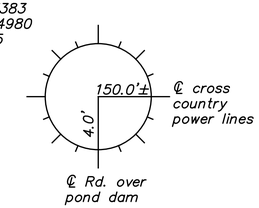

REV.	DATE	REVISIONS	BY	APP'D
5				
4				
3				
2				
1				

Designed By: PRP
Drawn By: JCK/JAA
Checked By: HDL
Issue Date: SEPT. 2016

COPYRIGHT © -2016-SHAFER, KLINE & WARREN INC.

SHAFER, KLINE & WARREN
11250 Corporate Avenue
Lenexa, KS 66219-1392
913.888.7800 FAX: 913.888.7868
SURVEYING | ENGINEERING | CONSTRUCTION

CLEAR CREEK PARKWAY
CITY OF SHAWNEE, KANSAS

GENERAL LAYOUT & REFERENCE POINTS

150561-010

SHEET NO.
9 OF 182

LAYOUT: MODEL | BY: jadams | DATE: 20-SEP-2016 10:11:00 AM
L:\150561-010_Cad\Civil\General Layout\150561-010_G-LAYOUT-01.dgn

Sta. 10+05.65 To Sta. 10+36.70 No Median
Sta. 10+36.70 To Sta. 10+79.98 4'–4"
Sta. 10+79.98 To Sta. 12+08.44 4'–4" To 14'–8"
Sta. 12+08.44 To Sta. 12+23.00 14'–8"

@ Sta. 10+05.65 To Sta. 10+83.95 23'–0"
Sta. 10+83.95 To Sta. 12+23.00 23'–0" To 20'–0"

▫ Sta. 10+05.65 To Sta. 10+83.95 24'–2"
Sta. 10+83.95 To Sta. 12+23.00 24'–2" To 12'–4"

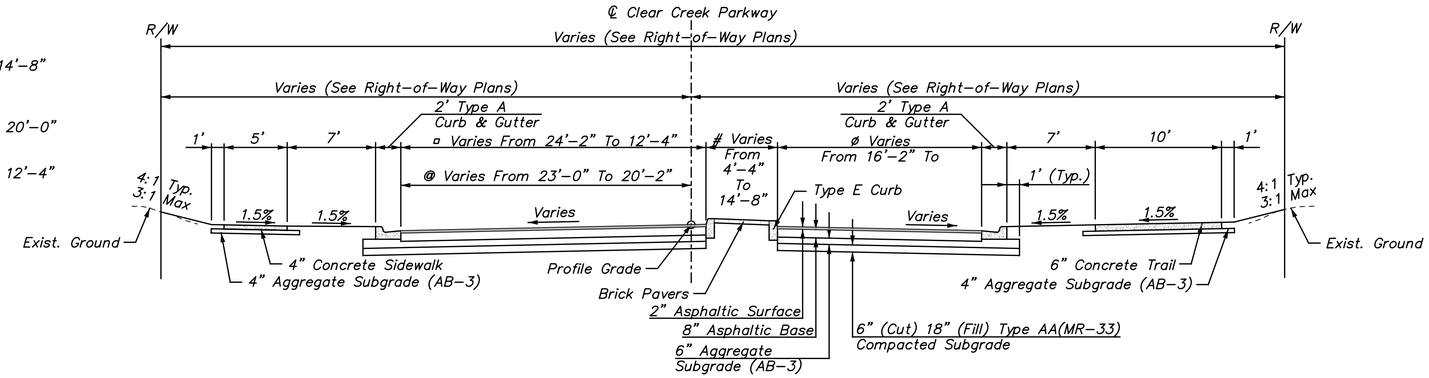

Typical Section–Clear Creek Parkway @ Clare Road

Not To Scale
Sta. 10+05.65 to Sta. 12+23.00
See Intersection Details For More Details

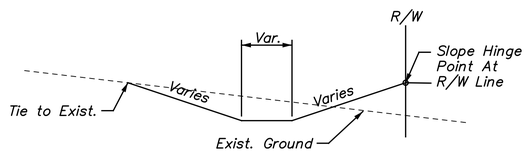

Special Ditch Left Typical Section

Not To Scale
Sta. 44+55.00 To Sta. 47+58.07 6' Flat Bottom, 3:1 Side Slopes
Sta. 49+90.00 To Sta. 51+20.00 6' Flat Bottom, 3:1 Side Slopes
Sta. 59+30.00 To Sta. 60+28.65 4' Flat Bottom, 4:1 Side Slopes
Sta. 60+28.65 To Sta. 60+87.00 4' Flat Bottom, 4:1 Side Slopes

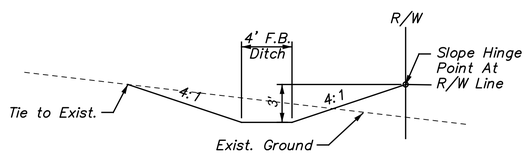

Standard Ditch Left Typical Section

Not To Scale
Sta. 54+05.00 to Sta. 59+30.00

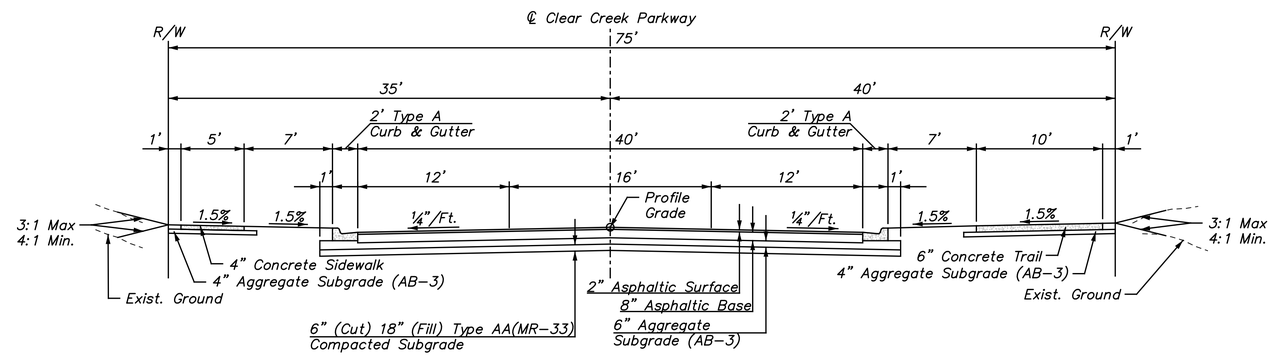

Typical Section–Clear Creek Parkway

Not To Scale
Sta. 12+23.00 to Sta. 39+92.75
Sta. 43+30.25 to Sta. 60+87.00

* Sta. 39+92.75 To Sta. 40+00.07 No Island
Sta. 40+00.07 To Sta. 40+99.24 9'–10" To 16'–9⅓"
Sta. 10+99.24 To Sta. 41+00.81 No Island
Sta. 42+50.81 To Sta. 42+52.29 No Island
Sta. 42+52.29 To Sta. 43+53.07 18'–2¾" To 10'–4"
Sta. 43+53.07 To Sta. 43+60.25 No Island

▫ Sta. 39+92.75 To Sta. 40+48.44 13'–0"
Sta. 40+84.44 To Sta. 41+00.81 13'–0" To 17'–10¾"
Sta. 42+50.81 To Sta. 43+60.25 16'–6¾" To 15'–0"

ø Sta. 39+92.75 To Sta. 41+00.81 15'–0" To 16'–9"
Sta. 42+50.81 To Sta. 42+94.65 17'–9" To 13'–0"
Sta. 42+94.65 To Sta. 43+60.25 13'–0"

\# Sta. 39+92.75 To Sta. 41+00.81 7'–0"
Sta. 42+50.81 To Sta. 42+94.62 7'–1" To 7'–4"
Sta. 42+94.62 To Sta. 43+60.25 7'–4" To 8'–6"

@ Sta. 39+92.75 To Sta. 40+62.85 9'–0" To 10'–9¾"
Sta. 40+62.85 To Sta. 41+00.81 10'–9¾" To 7'–1"
Sta. 42+50.81 To Sta. 43+60.25 7'–0"

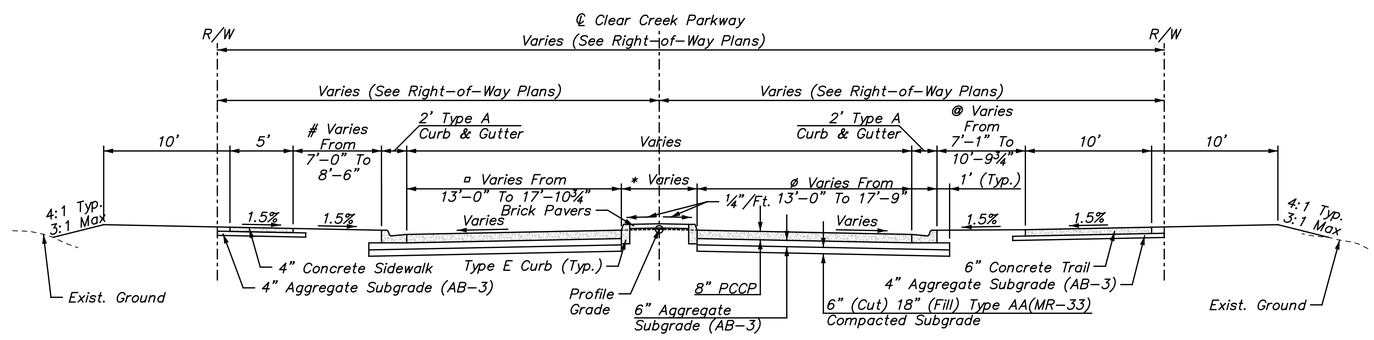

Typical Section–Clear Creek Parkway At Roundabout Splitter Islands

Not To Scale
Sta. 39+92.75 to Sta. 41+00.81
Sta. 42+50.81 to Sta. 43+60.25
See Intersection Details For More Details

REV.	DATE	REVISIONS	BY	APP'D
1				
2				
3				
4				
5				

Designed By: PRP
Drawn By: JCK/JAA
Checked By: HDL
Issue Date: SEPT. 2016

COPYRIGHT © –2016–SHAFER, KLINE & WARREN INC.

SHAFER, KLINE & WARREN
11250 Corporate Avenue
Lenexa, KS 66219-1392
913.888.7800 FAX: 913.888.7868
SURVEYING | ENGINEERING | CONSTRUCTION

CLEAR CREEK PARKWAY
CITY OF SHAWNEE, KANSAS

TYPICAL SECTIONS
ASPHALT OPTION (1)

150561–010

LAYOUT: MODEL | BY: jadams | DATE: 20–SEP–2016 10:11:08 AM
L:\150561–010_Cad\Civil\Typical Sections\150561–010_TYP–SEC–01.dgn

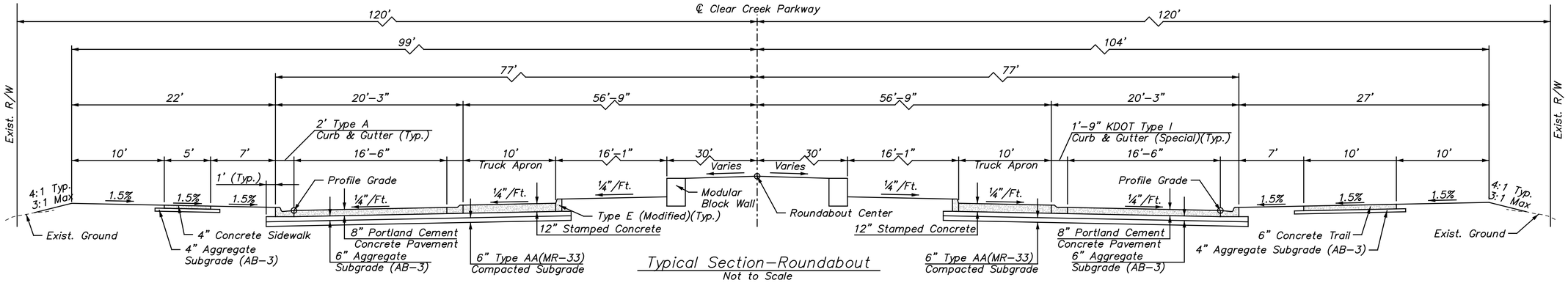

Typical Section–Roundabout
Not to Scale
Sta. 41+00.81 to Sta. 42+50.81

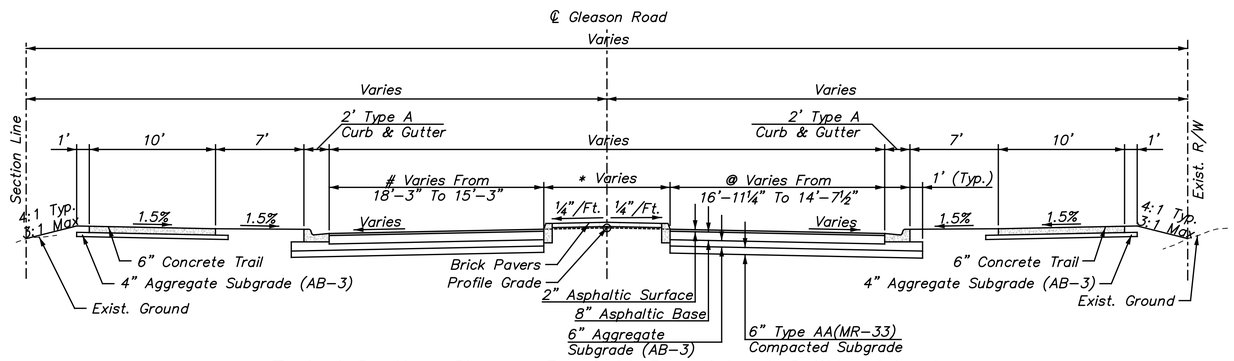

Typical Section–Gleason Road At Roundabout Splitter Islands
Not to Scale
Sta. 98+86.86 to Sta. 99+25.00

\# Sta. 98+98.28 To Sta. 99+25.00 15'–3" To 18'–3"

* Sta. 98+86.86 To Sta. 98+96.86 No Island
Sta. 98+96.86 To Sta. 99+23.49 6'–10½" To 15'–10¼"
Sta. 99+23.44 To Sta. 99+25.00 No Island

@ Sta. 98+98.44 To Sta. 99+25.00 14'–7½" To 16'–11¼"

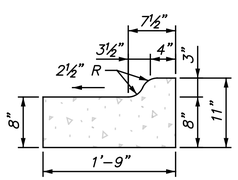

KDOT Type I (Special)(1'–9" Width)
Not to Scale
Slope Curb & Gutter To Match Road Slope

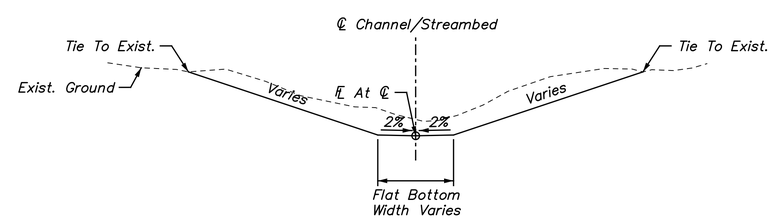

Channel Or Streambed Typical Section
Not To Scale
(Ditch From Structure 301) Sta. 2+26.56 to Sta. 3+01.32 10' Flat Bottom, 3:1 Side Slopes
(Special Ditch North West of Roundabout) Sta. 0+00.00 to Sta. 1+29.47 4' Flat Bottom, 4:1 Left Slope, 3:1 Right Slope
(Special Ditch To Structure 603) Sta. 3+71.40 to Sta. 4+70.89 4' Flat Bottom, 3:1 Side Slopes
(Special Ditch To Structure 704) Sta. 0+15.00 to Sta. 0+85.77 6' Flat Bottom, 3:1 Side Slopes
(Special Ditch To Structure 804) Sta. 0+00.00 to Sta. 1+11.24 6' Flat Bottom, 3:1 Side Slopes
(Special Ditch To Golf Course) Sta. 1+67.29 to Sta. 4+48.82 6' Flat Bottom, 3:1 Side Slopes
(Special Ditch To Golf Course) Sta. 4+47.11 to Sta. 5+24.25 6' Flat Bottom, 3:1 Side Slopes

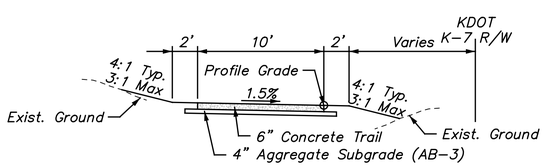

Typical Section–Concrete Recreational Trail
Not to Scale
Sta. xx+xx.xx to Sta. xx+xx.xx

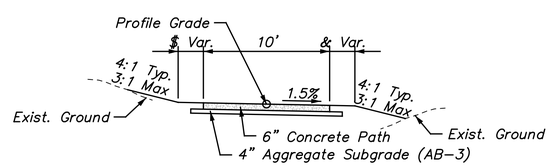

Typical Section–Concrete Cart Path
Not To Scale
Sta. 0+90.84 To Sta. 1+39.10
Sta. 2+51.10 To Sta. 4+21.32

$ Sta. 0+90.84 To Sta. 1+39.10 10'–0"
Sta. 2+51.10 To Sta. 4+21.10 2'–0"

& Sta. 0+90.84 To Sta. 1+39.10 10'–0"
Sta. 2+51.10 To Sta. 2+95.00 10'–0"
Sta. 2+95.00 To Sta. 3+40.00 10'–0" To 2'–0"
Sta. 3+40.00 To Sta. 4+21.10 2'–0"

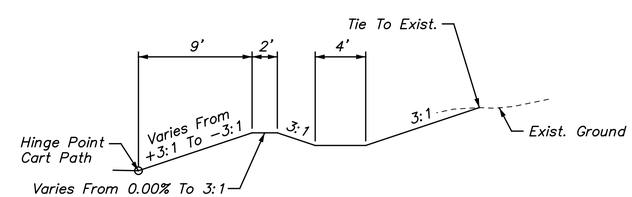

Typical Section–Cart Path Berm
Not to Scale
Sta. 2+67.50 to Sta. 3+30.12

REV.	DATE	REVISIONS	BY	APP'D
5				
4				
3				
2				
1				

Designed By: PRP
Drawn By: JCK/JAA
Checked By: HDL
Issue Date: SEPT. 2016

COPYRIGHT © –2016–SHAFER, KLINE & WARREN INC.

SHAFER, KLINE & WARREN
11250 Corporate Avenue
Lenexa, KS 66219-1392
913.888.7800 FAX: 913.888.7868
SURVEYING | ENGINEERING | CONSTRUCTION

CLEAR CREEK PARKWAY
CITY OF SHAWNEE, KANSAS

TYPICAL SECTIONS
ASPHALT OPTION (2)

150561–010

SHEET NO.
11 OF 182

LAYOUT: MODEL | BY: jadams | DATE: 20–SEP–2016 10:11:10 AM
L:\150561–010_Cad\Civil\Typical Sections\150561–010_TYP–SEC–02.dgn

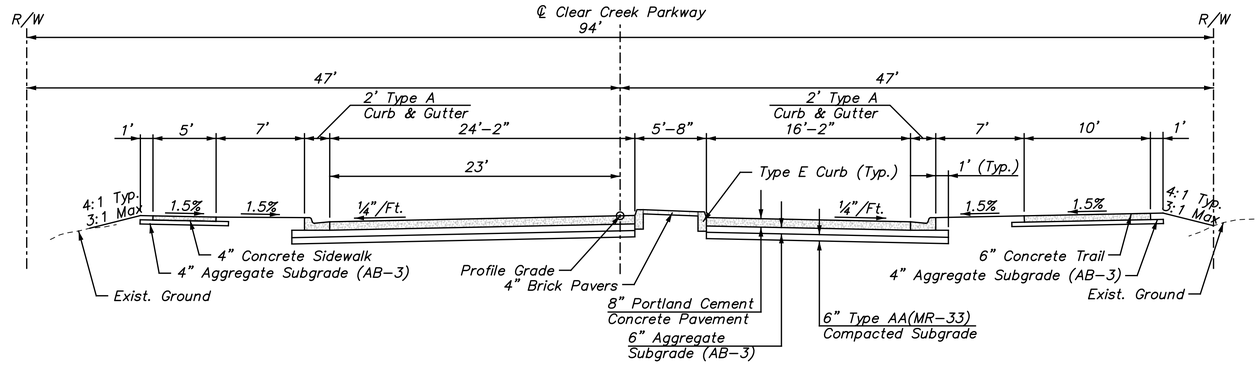

Typical Section–Clear Creek Parkway @ Clare Road
Not to Scale
Sta. 10+07.86 to Sta. 12+23.00

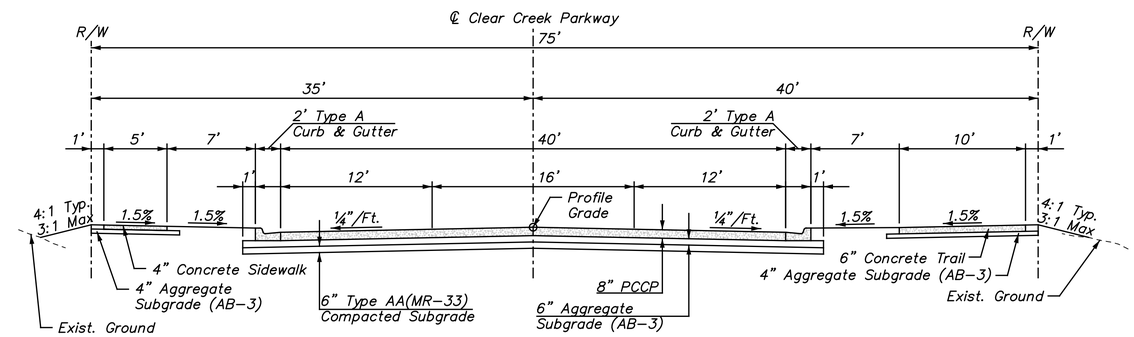

Typical Section–Clear Creek Parkway
Not to Scale
Sta. 12+23.00 to Sta. 40+00.07
Sta. 43+53.07 to Sta. 60+87.00

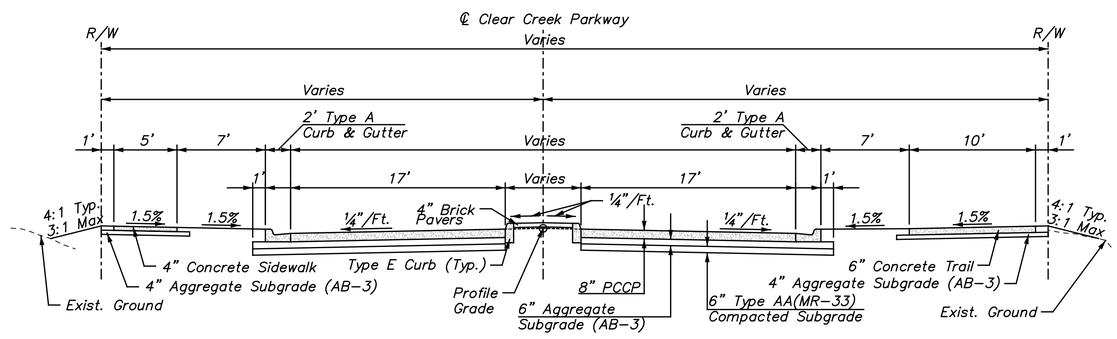

Typical Section–Clear Creek Parkway At Roundabout Splitter Islands
Not to Scale
Sta. 40+00.07 to Sta. 41+00.81
Sta. 42+50.81 to Sta. 43+53.07

REV.	DATE	REVISIONS	BY	APP'D
1				
2				
3				
4				
5				

Designed By: PRP
Drawn By: JCK/JAA
Checked By: HDL
Issue Date: SEPT. 2016

COPYRIGHT © -2016-SHAFER, KLINE & WARREN INC.

SHAFER, KLINE & WARREN
11250 Corporate Avenue
Lenexa, KS 66219-1392
913.888.7800 FAX: 913.888.7868
SURVEYING | ENGINEERING | CONSTRUCTION

CLEAR CREEK PARKWAY
CITY OF SHAWNEE, KANSAS

TYPICAL SECTIONS
CONCRETE OPTION (3)

150561-010

LAYOUT: MODEL | BY: jadams | DATE: 20-SEP-2016 10:11:12 AM
L:\150561-010_Cad\Civil\Typical Sections\150561-010_TYP-SEC-03.dgn

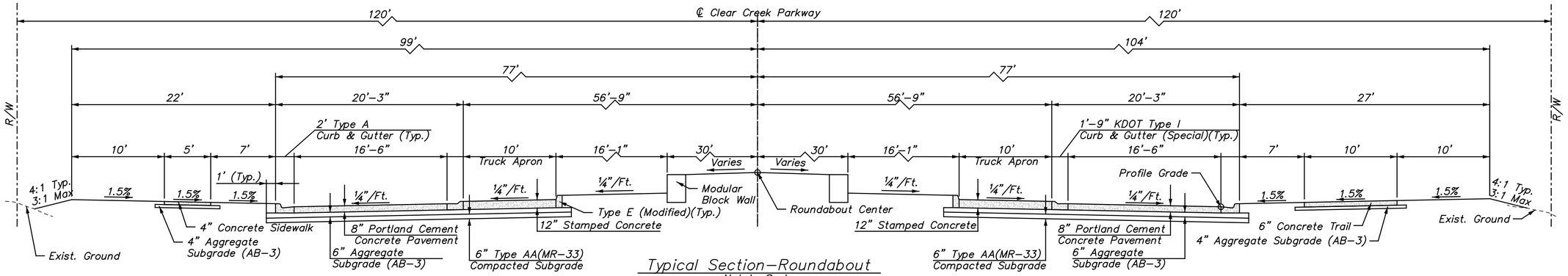

Typical Section–Roundabout
Not to Scale
Sta. 41+00.81 to Sta. 42+50.81

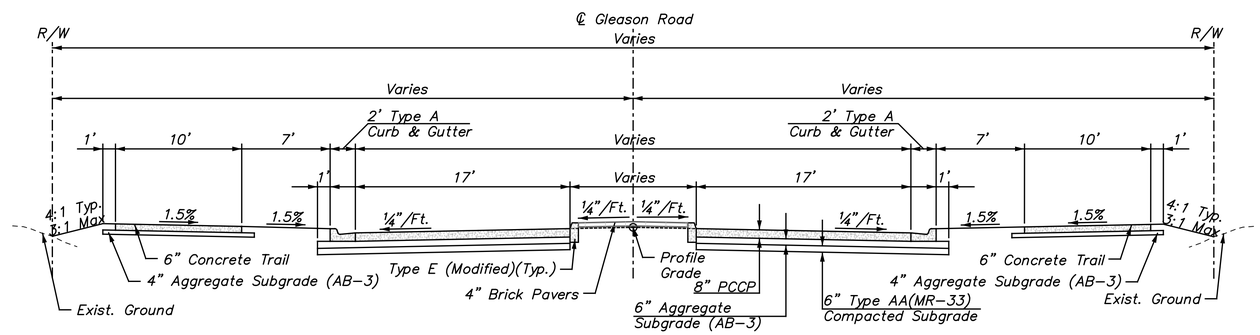

Typical Section–Gleason Road At Roundabout Splitter Islands
Not to Scale
Sta. 98+86.86 to Sta. 99+25.00

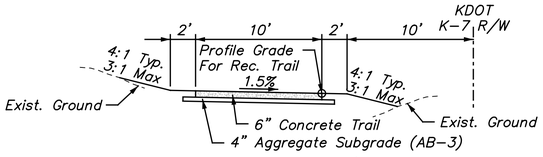

Typical Section–Concrete Trail/Golf Cart Path
Not to Scale
Sta. xx+xx.xx to Sta. xx+xx.xx

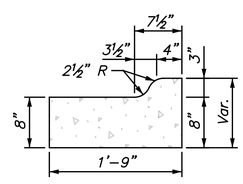

KDOT Type I (Special)(1'–9" Width)
Not to Scale

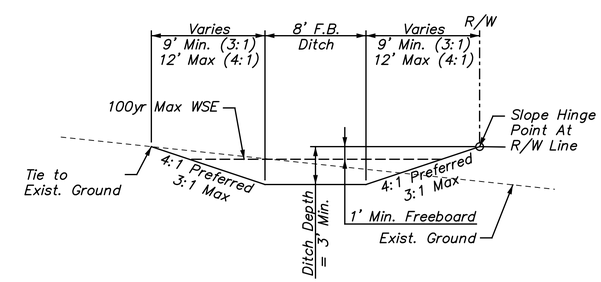

Typical Section–Fill Slope Ditch
Not to Scale
(Only Used Where Needed For Drainage
And/Or to Protect the Roadway Fill Slope)
Sta. xx+xx.xx to Sta. xx+xx.xx

REV.	DATE	REVISIONS	BY	APP'D
1				
2				
3				
4				
5				

Designed By: PRP
Drawn By: JCK/JAA
Checked By: HDL
Issue Date: SEPT. 2016

COPYRIGHT © –2016–SHAFER, KLINE & WARREN INC.

SHAFER, KLINE & WARREN
11250 Corporate Avenue
Lenexa, KS 66219-1392
913.888.7800 FAX: 913.888.7868
SURVEYING | ENGINEERING | CONSTRUCTION

CLEAR CREEK PARKWAY
CITY OF SHAWNEE, KANSAS

TYPICAL SECTIONS
CONCRETE OPTION (4)

150561–010

LAYOUT: MODEL | BY: jadams | DATE: 20–SEP–2016 10:11:14 AM
L:\150561–010_Cad\Civil\Typical Sections\150561–010_TYP–SEC–04.dgn

NOT FOR CONSTRUCTION

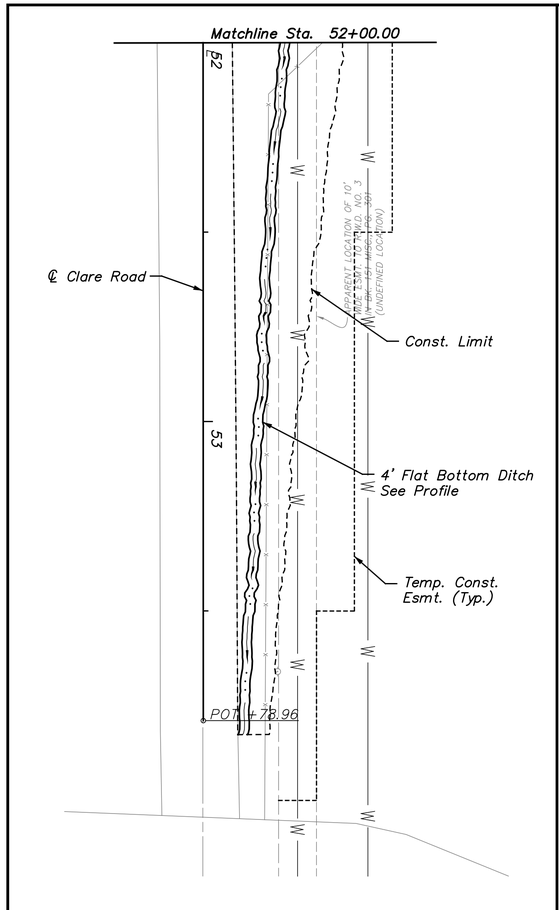

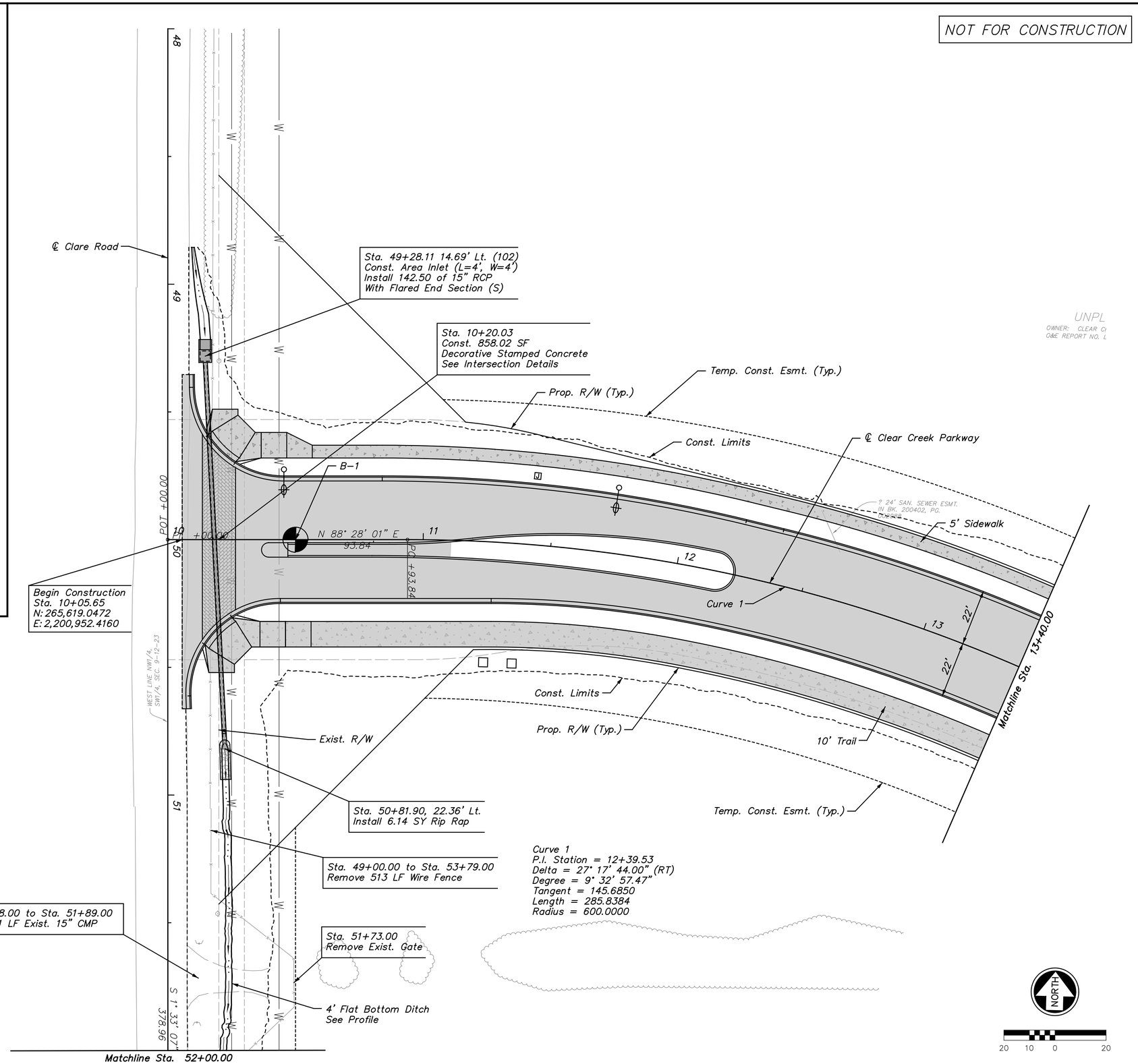

Legend

- Proposed Pavement
- Proposed Concrete Pavement, Sidewalk, Trail
- Brick Pavers
- Stamped Concrete Pavers
- Proposed Storm Sewer
- Rip Rap
- Vegetated Turf Reinforcement Mat

REV.	DATE	REVISIONS	BY	APP'D
1				
2				
3				
4				
5				

Designed By: PRP
Drawn By: JCK/JAA
Checked By: HDL
Issue Date: SEPT. 2016

COPYRIGHT © -2016-SHAFER, KLINE & WARREN INC.

SHAFER, KLINE & WARREN
11250 Corporate Avenue
Lenexa, KS 66219-1392
913.888.7800 FAX: 913.888.7868
SURVEYING | ENGINEERING | CONSTRUCTION

CLEAR CREEK PARKWAY
CITY OF SHAWNEE, KANSAS

PLAN SHEET (1)
STA. 10+00.00 TO STA. 13+40.00

150561-010

LAYOUT: MODEL | BY: jadams | DATE: 20-SEP-2016 10:11:28 AM
L:\150561-010_Cad\Civil\Plan Profiles\150561-010_PL-01.dgn

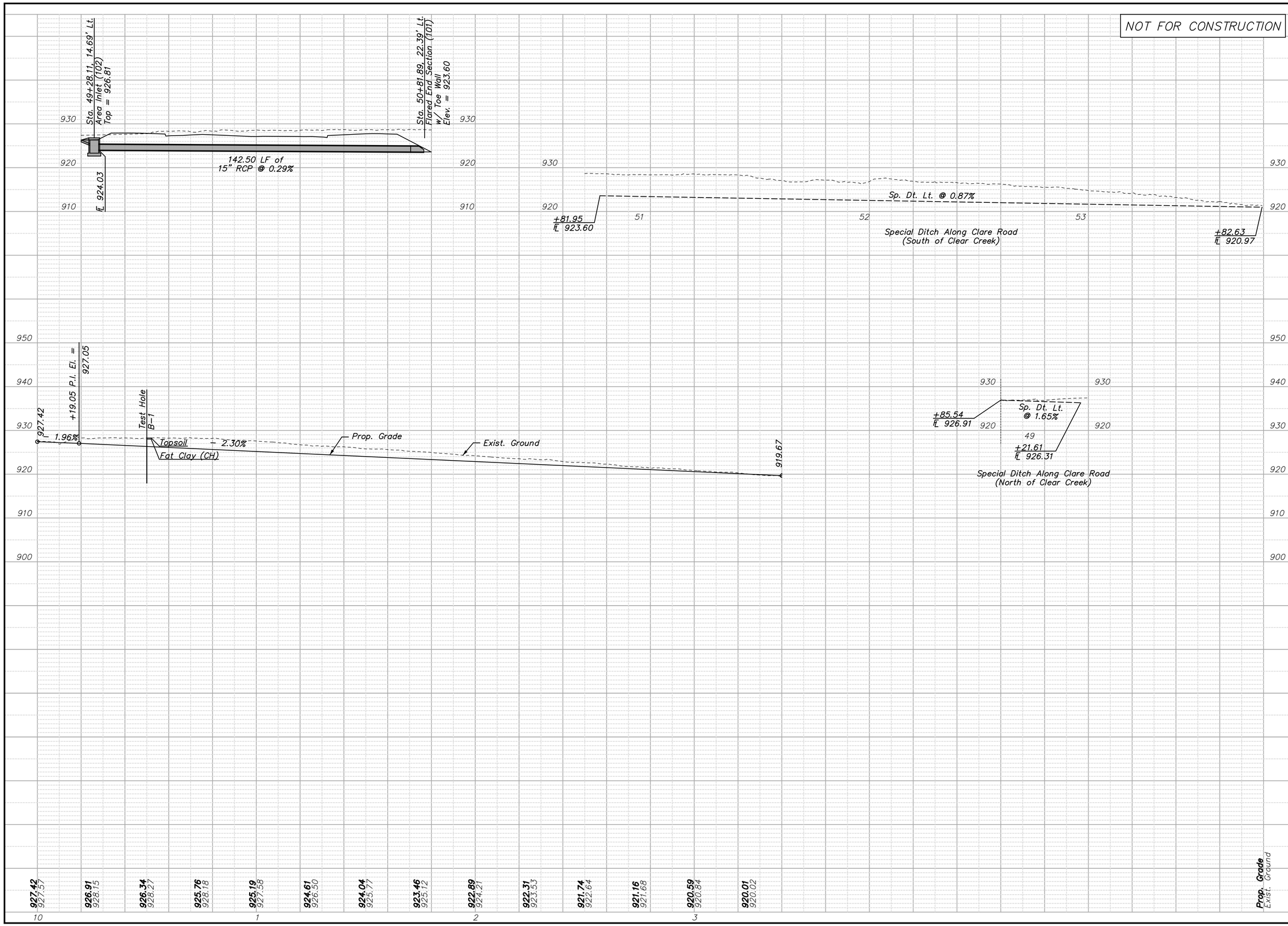

REV.	DATE	REVISIONS	BY	APP'D
5				
4				
3				
2				
1				

Designed By: PRP
Drawn By: JCK/JAA
Checked By: HDL
Issue Date: SEPT. 2016

COPYRIGHT © -2016-SHAFER, KLINE & WARREN INC.

SHAFER, KLINE & WARREN
11250 Corporate Avenue
Lenexa, KS 66219-1392
913.888.7800 FAX: 913.888.7868
SURVEYING | ENGINEERING | CONSTRUCTION

CLEAR CREEK PARKWAY
CITY OF SHAWNEE, KANSAS

PROFILE SHEET (1)
STA. 10+00.00 TO STA. 13+40.00

150561-010

LAYOUT: MODEL | BY: jadams | DATE: 20-SEP-2016 10:12:16 AM
L:\150561-010_Cad\Civil\Plan Profiles\150561-010_PF-01.dgn

NOT FOR CONSTRUCTION

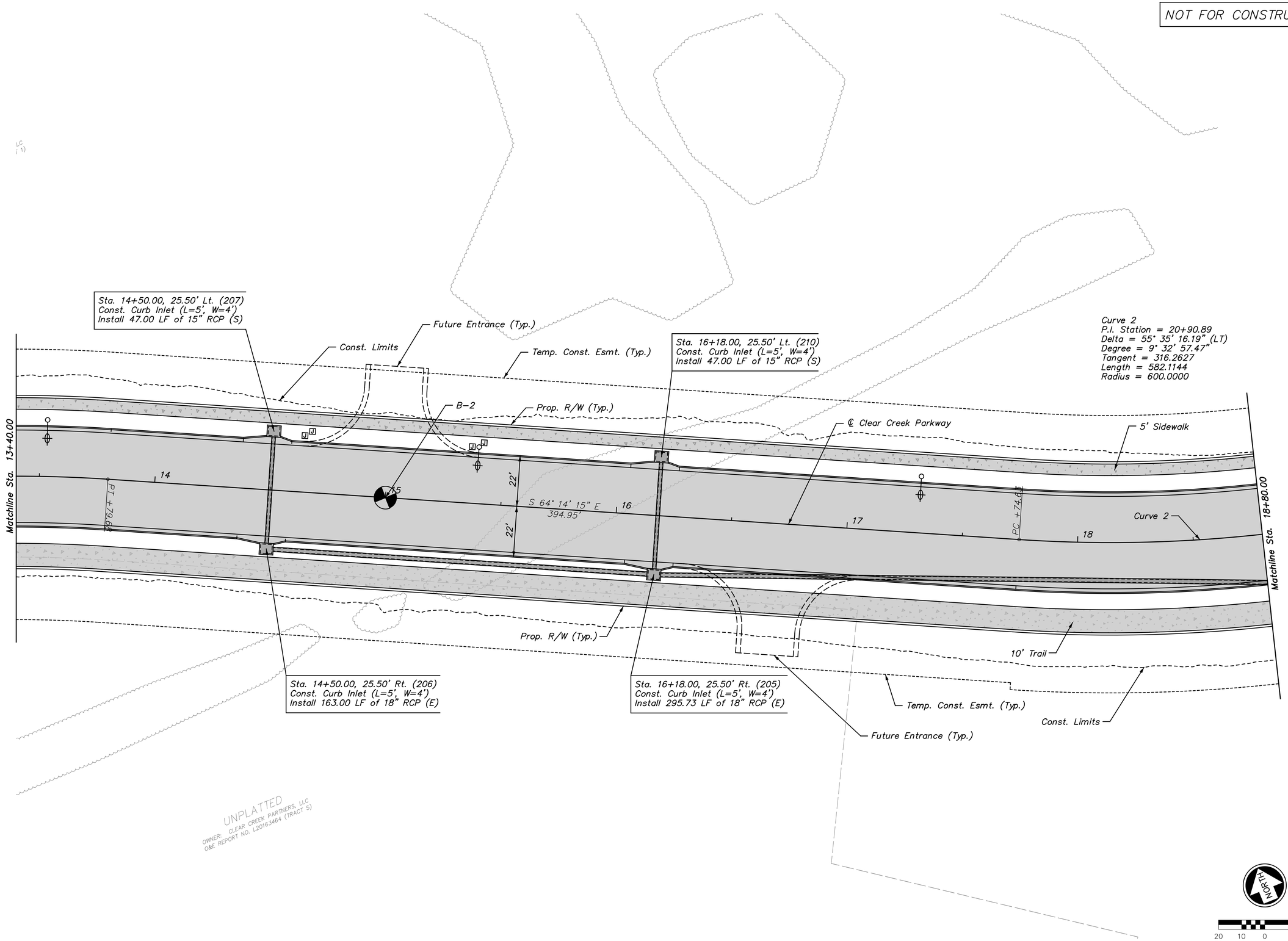

REV.	DATE	REVISIONS	BY	APP'D
1				
2				
3				
4				
5				

Designed By: PRP
Drawn By: JCK/JAA
Checked By: HDL
Issue Date: SEPT. 2016

COPYRIGHT © -2016-SHAFER, KLINE & WARREN INC.

SHAFER, KLINE & WARREN
11250 Corporate Avenue
Lenexa, KS 66219-1392
913.888.7800 FAX: 913.888.7868
SURVEYING | ENGINEERING | CONSTRUCTION

CLEAR CREEK PARKWAY
CITY OF SHAWNEE, KANSAS

PLAN SHEET (2)
STA. 13+40.00 TO STA. 18+80.00

150561-010

SHEET NO.
16 OF 182

LAYOUT: MODEL | BY: jadams | DATE: 20-SEP-2016 10:12:30 AM
L:\150561-010_Cad\Civil\Plan Profiles\150561-010_PL-02.dgn

NOT FOR CONSTRUCTION

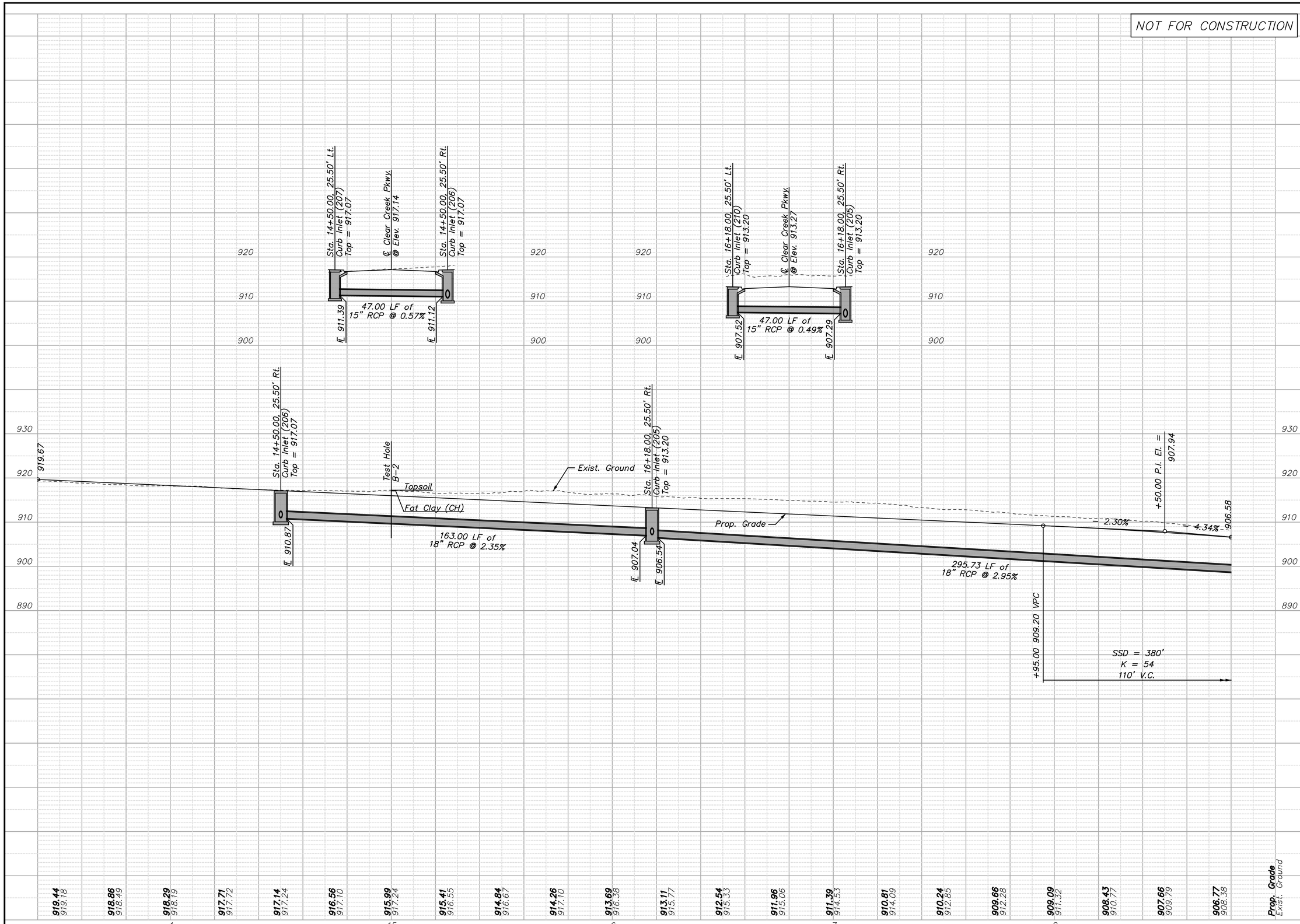

REV.	DATE	REVISIONS	BY	APP'D
1				
2				
3				
4				
5				

Designed By: PRP
Drawn By: JCK/JAA
Checked By: HDL
Issue Date: SEPT. 2016

COPYRIGHT © -2016-SHAFER, KLINE & WARREN INC.

SHAFER, KLINE & WARREN
11250 Corporate Avenue
Lenexa, KS 66219-1392
913.888.7800 FAX: 913.888.7868
SURVEYING | ENGINEERING | CONSTRUCTION

CLEAR CREEK PARKWAY
CITY OF SHAWNEE, KANSAS

PROFILE SHEET (2)
STA. 13+40.00 TO STA. 18+80.00

150561-010

SHEET NO. 17 OF 182

LAYOUT: MODEL | BY: jadams | DATE: 20-SEP-2016 10:12:52 AM
L:\150561-010_Cad\Civil\Plan Profiles\150561-010_PF-02.dgn

NOT FOR CONSTRUCTION

USACE Define Wetland
The Contractor Shall Confine
The Work Area Within The
Slope Limit & Minimize
All Disturbance Within The
Defined Area

Shaded Area of Wetland
Represents The Area
Disturbed By Construction

Perm. Drainage Esmt.

5' Sidewalk

Matchline Sta. 24+00.00

PRC 1.56%

Curve 3

Shaded Area of Wetland
Represents The Area
Disturbed By Construction

Curve 3
P.I. Station = 25+78.27
Delta = 55° 03' 42.31" (RT)
Degree = 13° 28' 52.90"
Tangent = 221.5322
Length = 408.4288
Radius = 425.0000

Sta. 22+36.98, 71.53' Lt.
Install 17.78 SY Rip Rap

Sta. 22+00.00, 26.00' Lt. (202)
Const. Curb Inlet (L=8', W=5')
Install 48.69 LF of 30" RCP
With End Section (NE)

Const. Limits

23

22'

22'

℄ Clear Creek Parkway

Temp. Const. Esmt. (Typ.)

Prop. R/W (Typ.)

Sta. 19+15.00, 25.50' Lt. (208)
Const. Curb Inlet (L=8', W=4')
Install 47.00 LF of 15" RCP (S)

22

B-4

Perm. Retaining Wall
Esmt.

Sta. 23+71.72 to Sta. 24+34.17
Const. Modular Block Retaining Wall
See Retaining Wall Plan & Profiles

USACE Define Wetland
The Contractor Shall Confine
The Work Area Within The
Slope Limit & Minimize
All Disturbance Within The
Defined Area

B-3

21

20

19

Matchline Sta. 18+80.00

Sta. 22+00.00, 26.00' Rt. (203)
Const. Curb Inlet (L=8', W=5')
Install 47.00 LF of 30" RCP (N)

Const. Limits

10' Trail

Temp. Const. Esmt. (Typ.)

Prop. R/W (Typ.)

Sta. 20+31.00 to Sta. 22+17.00
Remove 200 LF Wire Fence

Future Entrance (Typ.)

Perm. Drainage Esmt.

Sta. 19+15.00, 25.75' Rt. (204)
Const. Curb Inlet (L=8', W=4.5')
Install 286.67 LF of 21" RCP (E)

Sta. 19+48.01, 60.07' Rt. (209)
Const. Curb Inlet (L=10', W=4')
Install 46.39 LF of 15" RCP (NW)

NORTH

20 10 0 20

REV.	DATE	REVISIONS	BY	APP'D
1				
2				
3				
4				
5				

Designed By: PRP
Drawn By: JCK/JAA
Checked By: HDL
Issue Date: SEPT. 2016

COPYRIGHT © -2016-SHAFER, KLINE & WARREN INC.

SHAFER, KLINE & WARREN
11250 Corporate Avenue
Lenexa, KS 66219-1392
913.888.7800 FAX: 913.888.7868
SURVEYING | ENGINEERING | CONSTRUCTION

CLEAR CREEK PARKWAY
CITY OF SHAWNEE, KANSAS

PLAN SHEET (3)
STA. 18+80.00 TO STA. 24+00.00

150561-010

SHEET NO.
18 OF 182

LAYOUT: MODEL | BY: jadams | DATE: 20-SEP-2016 10:13:06 AM
L:\150561-010_Cad\Civil\Plan Profiles\150561-010_PL-03.dgn

NOT FOR CONSTRUCTION

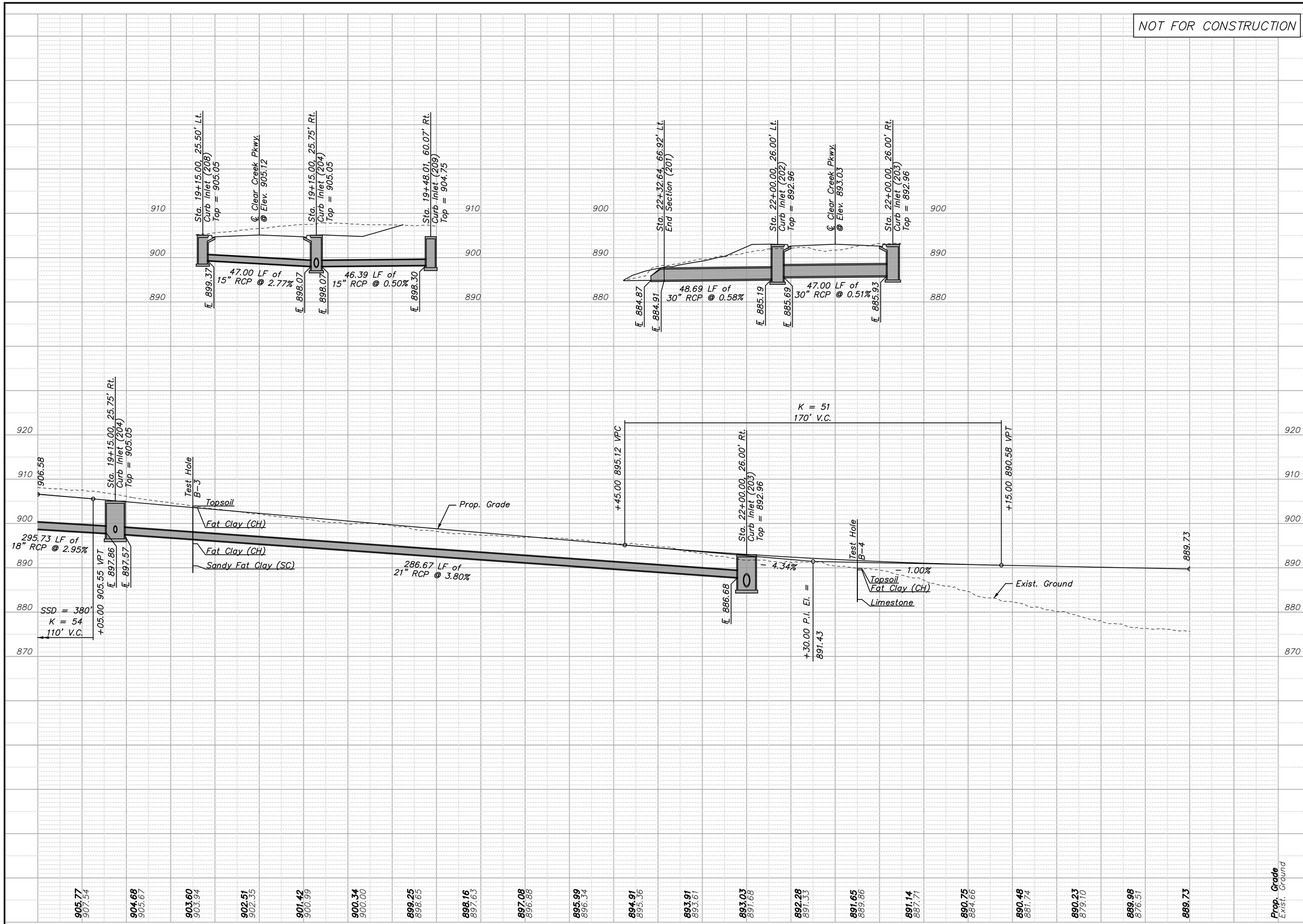

REV.	DATE	REVISIONS	BY	APP'D
5				
4				
3				
2				
1				

Designed By: PRP
Drawn By: JCK/JAA
Checked By: HDL
Issue Date: SEPT. 2016

COPYRIGHT © -2016-SHAFER, KLINE & WARREN INC.

SHAFER, KLINE & WARREN
11250 Corporate Avenue
Lenexa, KS 66219-1392
913.888.7800 FAX: 913.888.7868
SURVEYING | ENGINEERING | CONSTRUCTION

CLEAR CREEK PARKWAY
CITY OF SHAWNEE, KANSAS

PROFILE SHEET (3)
STA. 18+80.00 TO STA. 24+00.00

150561-010

SHEET NO.
19 OF 182

LAYOUT: MODEL | BY: jadams | DATE: 20-SEP-2016 10:13:28 AM
L:\150561-010_Cad\Civil\Plan Profiles\150561-010_PF-03.dgn

NOT FOR CONSTRUCTION

Shaded Area of Wetland Represents The Area Disturbed By Construction

Perm. Drainage Esmt.

USACE Define Wetland The Contractor Shall Confine The Work Area Within The Slope Limit & Minimize All Disturbance Within The Defined Area

Sta. 24+48.33, 65.55' Lt. (304)
Const. Outlet Control Structure (L=8', W=6')(Special)
Install 35.37 LF of 54" RCP (S)
See Outlet Control Structure Details

Sta. 24+52.66, 25.50' Lt. (303)
Const. Curb Inlet (L=10', W=4')(Special)
Install 47.52 LF of 54" RCP (S)

Sta. 24+23.66 to Sta. 25+50.00
Install 710.41 SY Vegetated TRM

Matchline Sta. 24+00.00

℄ Clear Creek Parkway

Prop. R/W (Typ.)

Sta. 26+62.00, 25.50' Lt. (407)
Const. Curb Inlet (L=8', W=4')
Install 47.00 LF of 18" RCP (S)

Sta. 26+93.18, 59.02' Lt. (408)
Const. Curb Inlet (L=10', W=4')
Install 45.04 LF of 18" RCP (SW)

Temp. Const. Esmt. (Typ.)

Perm. Drainage Esmt.

Future Entrance (Typ.)

5' Sidewalk

Const. Limits

Sta. 27+87.00, 25.50' Lt. (409)
Const. Curb Inlet (L=10', W=4')
Install 47.00 LF of 15" RCP (S)

USACE Define Wetland The Contractor Shall Confine The Work Area Within The Slope Limit & Minimize All Disturbance Within The Defined Area

Sta. 27+95.12 to Sta. 31+32.00
Install 1430.60 SY Vegetated TRM

Prop. R/W (Typ.)

Const. Limits

Sta. 24+59.73, 25.50' Rt. (302)
Const. Curb Inlet (L=10', W=4')(Special)
Install 66.47 LF of 54" RCP
With Flared End Section (S)

Sta. 26+04.00 to Sta. 26+66.00
Remove 67 LF Wire Fence

Perm. Retaining Wall Esmt.

Perm. Drainage Esmt.

Sta. 26+62.00, 25.50' Rt. (406)
Const. Curb Inlet (L=8', W=4')
Install 110.44 LF of 18" RCP (E)

Sta. 24+76.05, 101.03' Rt.
Install 36.79 SY Rip Rap
Install 22.22 SY Vegetated TRM

Shaded Area of Wetland Represents The Area Disturbed By Construction

Future Entrance (Typ.)

Temp. Const. Esmt. (Typ.)

10' Trail

USACE Define Wetland The Contractor Shall Confine The Work Area Within The Slope Limit & Minimize All Disturbance Within The Defined Area

Sta. 27+87.00, 25.75' Rt. (405)
Const. Curb Inlet (L=8', W=4.5')
Install 171.62 LF of 21" RCP (SE)

Shaded Area of Wetland Represents The Area Disturbed By Construction

UNPLATTED
OWNER: CLEAR CREEK PARTNERS, LLC
O&E REPORT NO. L2016-3464 (TRACT 5)

Sta. 28+65.00 to Sta. 28+68.00
Remove 25 LF Exist. Pipe

B-5

Pt. 1.63'

S 64° 45' 49" E
264.16'

Matchline Sta. 29+20.00

Shaded Area of Wetland Represents The Area Disturbed By Construction

Sta. 29+07.62 to Sta. 30+27.62
Install 937.46 SY Vegetated TRM

NORTH

20 10 0 20

REV.	DATE	REVISIONS	BY	APP'D
1				
2				
3				
4				
5				

Designed By: PRP
Drawn By: JCK/JAA
Checked By: HDL
Issue Date: SEPT. 2016

COPYRIGHT © -2016-SHAFER, KLINE & WARREN INC.

SHAFER, KLINE & WARREN
11250 Corporate Avenue
Lenexa, KS 66219-1392
913.888.7800 FAX: 913.888.7868
SURVEYING | ENGINEERING | CONSTRUCTION

CLEAR CREEK PARKWAY
CITY OF SHAWNEE, KANSAS

PLAN SHEET (4)
STA. 24+00.00 TO STA. 29+20.00

150561-010

SHEET NO.
20 OF 182

LAYOUT: MODEL | BY: jadams | DATE: 20-SEP-2016 10:13:42 AM
L:\150561-010_Civil\Civil\Plan Profiles\150561-010_PL-04.dgn

LAYOUT: MODEL | BY: jadams | DATE: 20-SEP-2016 10:14:05 AM
L:\150561-010_Cad\Civil\Plan Profiles\150561-010_PF-04.dgn

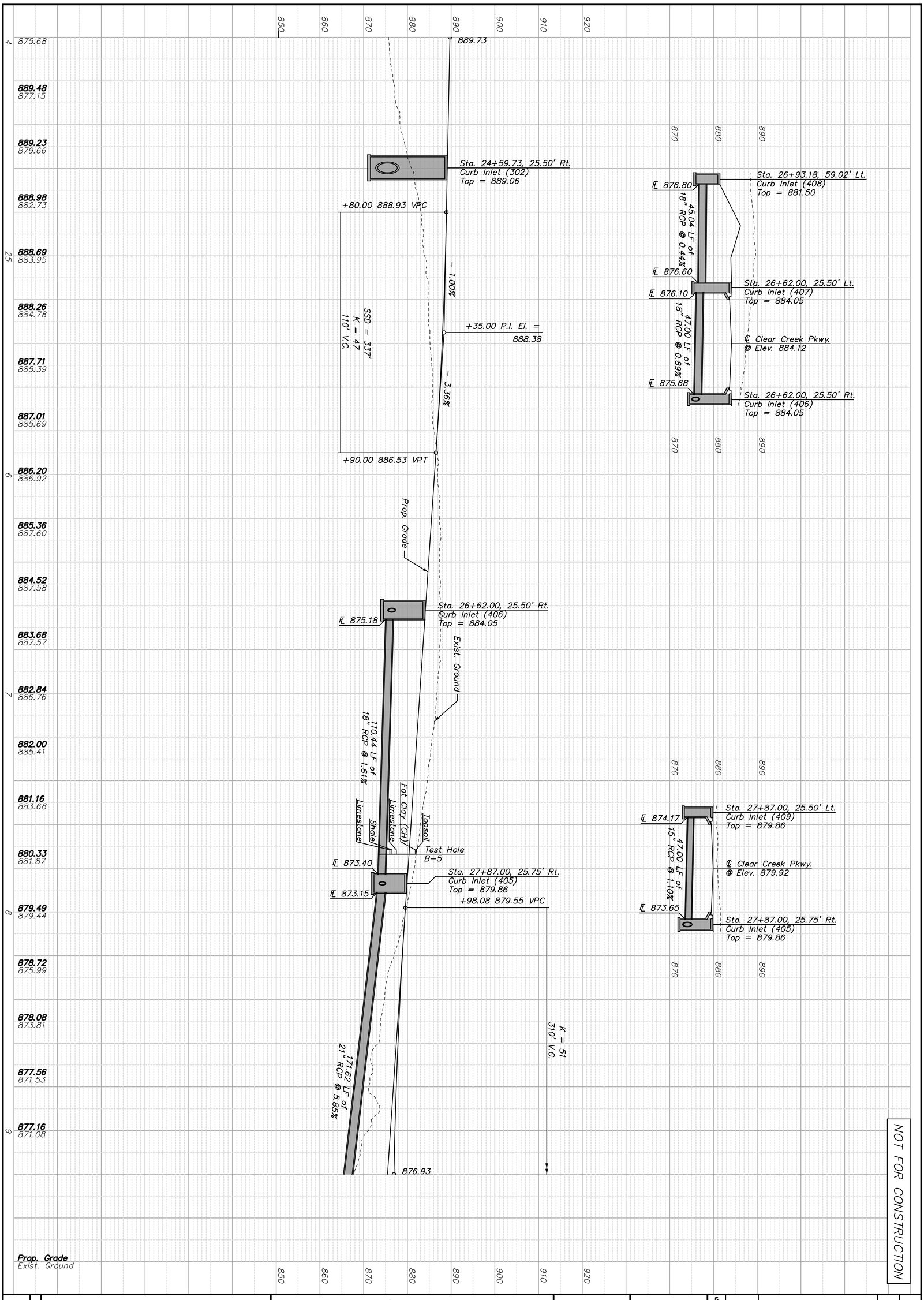

NOT FOR CONSTRUCTION

SHEET NO. 21 OF 182

150561-010

CLEAR CREEK PARKWAY
CITY OF SHAWNEE, KANSAS

PROFILE SHEET (4)
STA. 24+00.00 TO STA. 29+20.00

SHAFER, KLINE & WARREN
11250 Corporate Avenue
Lenexa, KS 66219-1392
913.888.7800 FAX: 913.888.7868
SURVEYING | ENGINEERING | CONSTRUCTION

Designed By: PRP
Drawn By: JCK/JAA
Checked By: HDL
Issue Date: SEPT. 2016

REV.	DATE	REVISIONS	BY	APP'D
5				
4				
3				
2				
1				

COPYRIGHT © -2016-SHAFER, KLINE & WARREN INC.

NOT FOR CONSTRUCTION

Sta. 29+67.62, 73.95' Lt. (404)
Const. Outlet Contol Structure (L=10', W=9')(Special)
Install 41.95 LF of 72" RCP (SW)
See Outlet Control Structure Details

USACE Define Wetland
The Contractor Shall Confine
The Work Area Within The
Slope Limit & Minimize
All Disturbance Within The
Defined Area

Shaded Area of Wetland
Represents The Area
Disturbed By Construction

Sta. 29+67.62, 25.50' Lt. (403)
Const. Curb Inlet (L=10', W=4')(Special)
Install 47.00 LF of 72" RCP (SW)

Perm. Drainage Esmt.

Shaded Area of Wetland
Represents The Area
Disturbed By Construction

Sta. 31+00.00, 25.50' Lt. (411)
Const. Curb Inlet (L=10', W=4')
Install 47.00 LF of 15" RCP (SW)

Temp. Const. Esmt. (Typ.)

Sta. 32+41.37, 56.43' Lt. (506)
Const. Curb Inlet (L=10', W=4')
Install 50.69 LF of 18" RCP (S)
Provide Opening For Future 18" RCP
At Flowline 877.25 (NE)

℄ Clear Creek Parkway

Future Entrance (Typ.)

Prop. R/W (Typ.)

Perm. Drainage Esmt.

Sta. 32+83.19, 25.50' Lt. (505)
Const. Curb Inlet (L=8', W=4')
Install 47.00 LF of 18" RCP (SW)

Const. Limits

Matchline Sta. 29+20.00

30

31

32

33

34

22'

22'

PC 29+32.24

B-6

5' Sidewalk

Curve 4

10' Trail

Prop. R/W (Typ.)

Sta. 31+00.00, 25.50' Rt. (410)
Const. Curb Inlet (L=5', W=4')
Install 123.04 LF of 18" RCP (W)

USACE Define Wetland
The Contractor's Work
Will Consume All of
This Defined Wetland

Const. Limits

Future Entrance (Typ.)

Matchline Sta. 34+60.00

Sta. 32+83.19, 25.50' Rt. (504)
Const. Curb Inlet (L=5', W=4')
Install 173.29 LF of 18" RCP (W)

Temp. Const. Esmt. (Typ.)

Perm. Drainage Esmt.

Sta. 29+67.62, 25.75' Rt. (402)
Const. Curb Inlet (L=10', W=4.5')(Special)
Install 77.02 LF of 72" RCP
W/ Flared End Section (S)

Sta. 29+85.43, 111.39' Rt.
Install 88.15 SY Rip Rap

Curve 4
P.I. Station = 32+51.25
Delta = 25° 01' 27.22" (RT)
Degree = 5° 43' 46.48"
Tangent = 221.9165
Length = 436.7552
Radius = 1,000.0000

NORTH

20 10 0 20

REV.	DATE	REVISIONS	BY	APP'D
1				
2				
3				
4				
5				

COPYRIGHT © -2016-SHAFER, KLINE & WARREN INC.

Designed By: PRP
Drawn By: JCK/JAA
Checked By: HDL
Issue Date: SEPT. 2016

SHAFER, KLINE & WARREN
11250 Corporate Avenue
Lenexa, KS 66219-1392
913.888.7800 FAX: 913.888.7868
SURVEYING | ENGINEERING | CONSTRUCTION

CLEAR CREEK PARKWAY
CITY OF SHAWNEE, KANSAS

PLAN SHEET (5)
STA. 29+20.00 TO STA. 34+60.00

150561-010

LAYOUT: MODEL | BY: jadams | DATE: 20-SEP-2016 10:14:18 AM
L:\150561-010_Cad\Civil\Plan Profiles\150561-010_PL-05.dgn

LAYOUT: MODEL | BY: jadams | DATE: 20-SEP-2016 10:14:41 AM
L:\150561-010_Cad\Civil\Plan Profiles\150561-010_PF-05.dgn

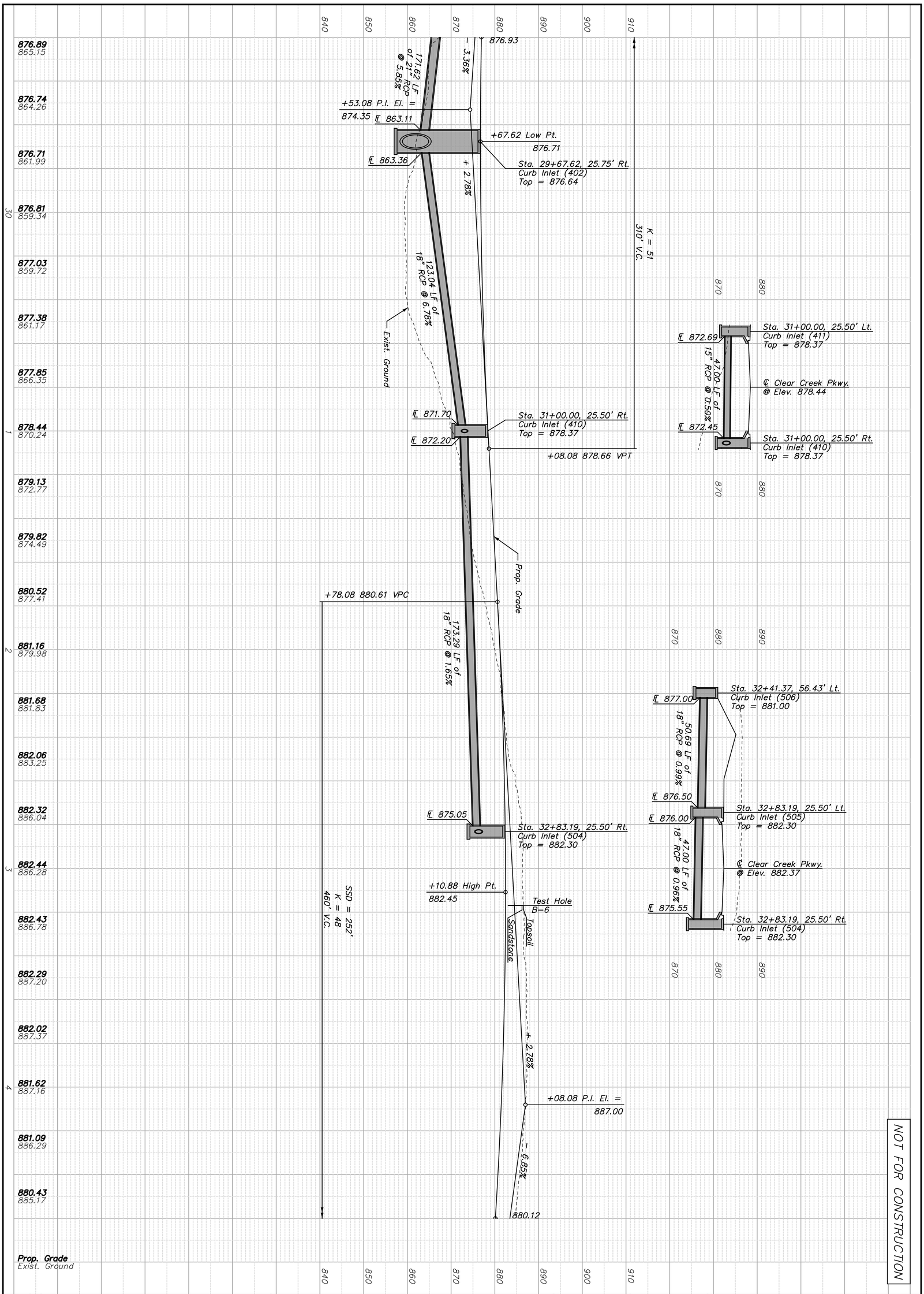

SHEET NO. 23 OF 182	150561-010	CLEAR CREEK PARKWAY CITY OF SHAWNEE, KANSAS	PROFILE SHEET (5) STA. 29+20.00 TO STA. 34+60.00

SHAFER, KLINE & WARREN
11250 Corporate Avenue
Lenexa, KS 66219-1392
913.888.7800 FAX: 913.888.7868
SURVEYING | ENGINEERING | CONSTRUCTION

Designed By: PRP
Drawn By: JCK/JAA
Checked By: HDL
Issue Date: SEPT. 2016

REV.	DATE	REVISIONS	BY	APP'D
5				
4				
3				
2				
1				

COPYRIGHT © -2016-SHAFER, KLINE & WARREN INC.

NOT FOR CONSTRUCTION

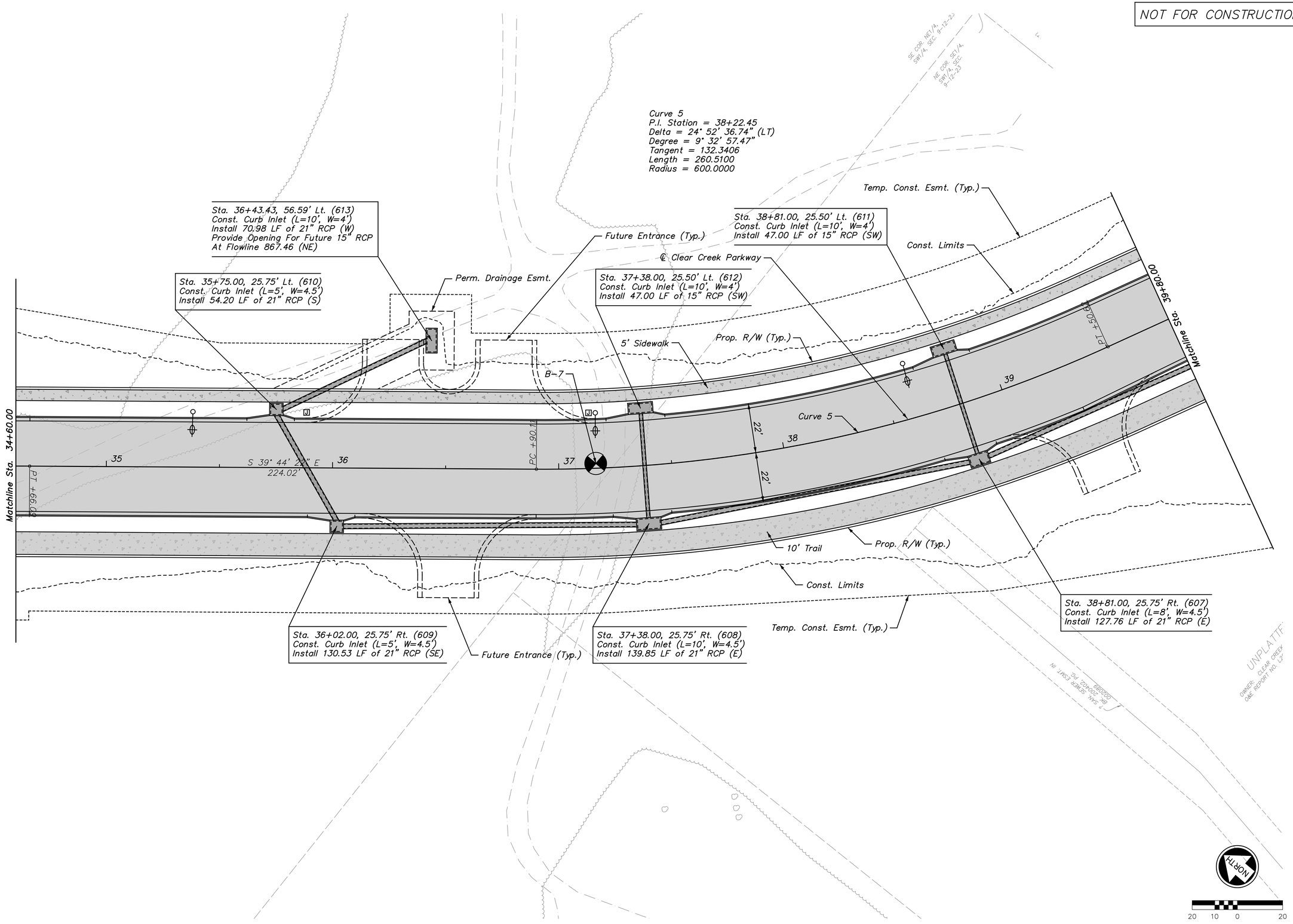

REV.	DATE	REVISIONS	BY	APP'D
1				
2				
3				
4				
5				

Designed By: PRP
Drawn By: JCK/JAA
Checked By: HDL
Issue Date: SEPT. 2016

COPYRIGHT © -2016-SHAFER, KLINE & WARREN INC.

SHAFER, KLINE & WARREN
11250 Corporate Avenue
Lenexa, KS 66219-1392
913.888.7800 FAX: 913.888.7868
SURVEYING | ENGINEERING | CONSTRUCTION

CLEAR CREEK PARKWAY
CITY OF SHAWNEE, KANSAS

PLAN SHEET (6)
STA. 34+60.00 TO STA. 39+80.00

150561-010

LAYOUT: MODEL | BY: jadams | DATE: 20-SEP-2016 10:14:54 AM
L:\150561-010_Cad\Civil\Plan Profiles\150561-010_PL-06.dgn

NOT FOR CONSTRUCTION

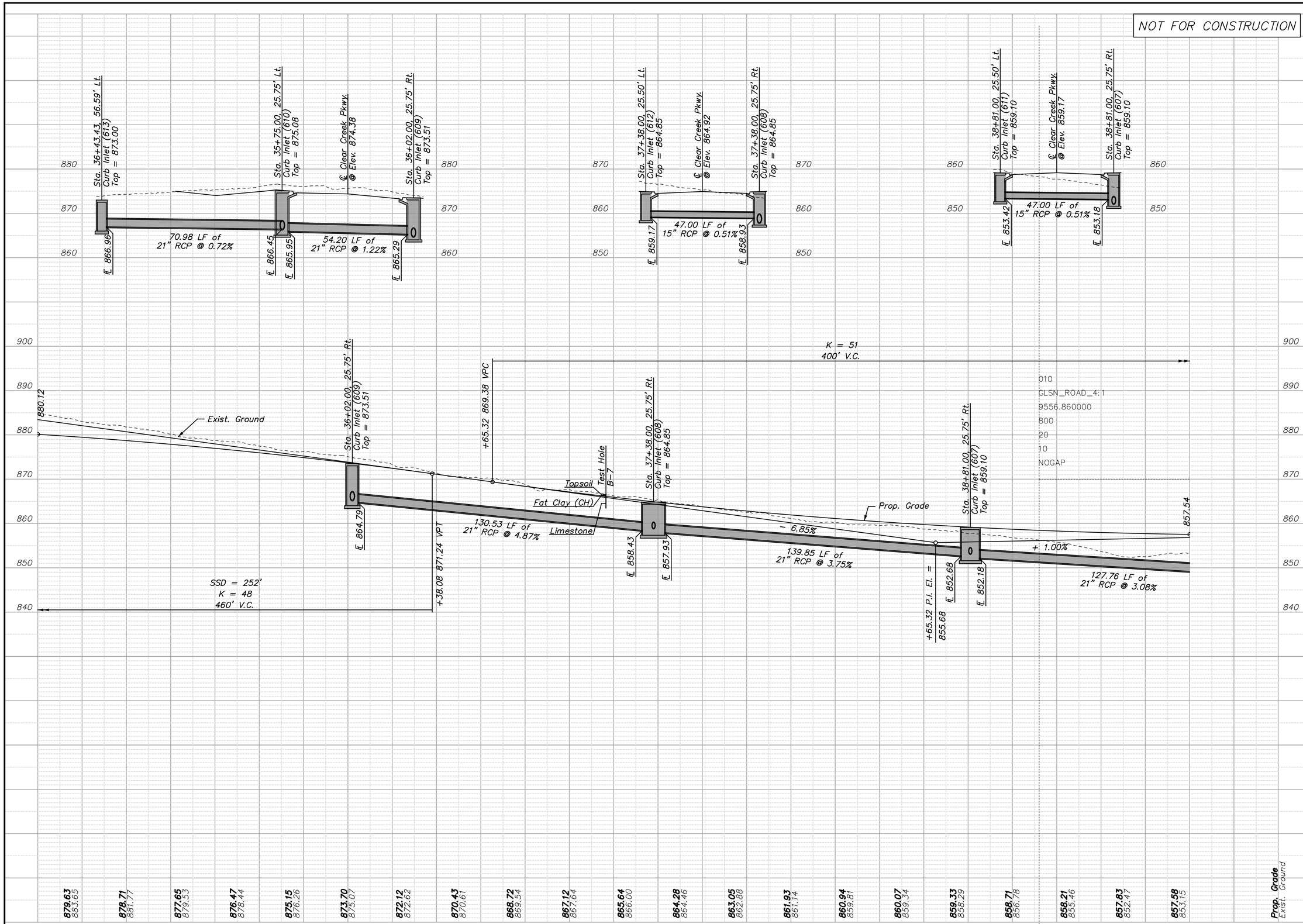

REV.	DATE	REVISIONS	BY	APP'D
1				
2				
3				
4				
5				

Designed By: PRP
Drawn By: JCK/JAA
Checked By: HDL
Issue Date: SEPT. 2016

COPYRIGHT © -2016-SHAFER, KLINE & WARREN INC.

SHAFER, KLINE & WARREN
11250 Corporate Avenue
Lenexa, KS 66219-1392
913.888.7800 FAX: 913.888.7868
SURVEYING | ENGINEERING | CONSTRUCTION

CLEAR CREEK PARKWAY
CITY OF SHAWNEE, KANSAS

PROFILE SHEET (6)
STA. 34+60.00 TO STA. 39+80.00

150561-010

SHEET NO.
25 OF 182

LAYOUT: MODEL | BY: jadams | DATE: 20-SEP-2016 10:15:17 AM
L:\150561-010_Cad\Civil\Plan Profiles\150561-010_PF-06.dgn

NOT FOR CONSTRUCTION

Sta. 42+46.94, 144.91' Lt. (603)
Const. 60" Flared End Section W/ Toe Wall
Install 251.33 LF of 60" RCP (SW)
Install 436.17 SY Rip Rap
Install 92.24 SY Vegetated TRM

6' Flat Bottom Ditch
See Grading Plans & Profile

Temp. Const. Esmt. (Typ.)

Perm. Drainage Esmt.

Const. Limits

Sta. 44+45.00, 25.50' Lt. (706)
Const. Curb Inlet (L=5', W=4')
Install 47.00 LF of 15" RCP (S)

Curve 6
P.I. Station = 43+80.63
Delta = 32° 22' 50.68" (LT)
Degree = 13° 28' 52.90"
Tangent = 123.3965
Length = 240.1890
Radius = 425.0000

Sta. 41+03.75 to Sta. 43+68.07
Const. Modular Block Retaining Wall
See Retaining Wall Plan & Profiles

Matchline Sta. 45+00.00

Prop. R/W (Typ.)

2' Flat Top Berm
See Grading Plans

Sta. 39+99.55, 63.86' Lt. (606)
Const. Area Inlet (L=4', W=4')
Install 37.31 LF of 18" RCP (S)
2 Openings W & E, Rotate Al 10.50° Lt.

5' Sidewalk

4' Flat Bottom Ditch
See Grading Plans & Profile

℄ Clear Creek Parkway

Sta. 40+14.37, 25.50' Lt. (605)
Const. Curb Inlet (L=10', W=4')
Install 44.46 LF of 21" RCP (SW)

Sta. 40+68.05
Const. 383.63 SF
Decorative Stamped Concrete

Curve 6

22'

22'

44

4' Flat Bottom
Ditch See Grading
Plans & Profile

Exist. R/W

B-8

Sta. 44+45.00, 25.50' Rt. (705)
Const. Curb Inlet (L=5', W=4')
Install 296.37 LF of 15" RCP (E)

Prop. R/W (Typ.)

Temp. Const. Esmt. (Typ.)

10' Trail

Sta. 42+02.00 to
Sta. 42+09.00
Remove 11 LF
Exist. Pipe

Perm. Retaining Wall Esmt.

Sta. 42+27.56 to Sta. 43+68.07
Const. Modular Block Retaining Wall
See Retaining Wall Plan & Profiles

Const. Limits

Matchline Sta. 39+80.00

Sta. 42+83.07
Const. 112.00 L.F. of Cart Path Tunnel
See Cart Path Plan & Profile

Sta. 42+84.07
Const. 379.90 SF
Decorative Stamped Concrete

Sta. 40+14.91, 23.18' Rt. (604)
Const. Curb Inlet (L=10', W=4.5')
Install 99.11 LF of 24" RCP (S)

Const. Limits

℄ Gleason Road

Sta. 40+95.28, 89.36' Rt. (602)
Const. Junction Box (L=10', W=7')
Install 47.64 LF of 60" RCP (CRP)
With 60" Flared End Section (S)
Rotate JB 4.5° Lt.

Curve 11

Matchline Sta. 98+80.00

℄ Sta. 41+75.81 Clear Creek Parkway =
℄ Sta. 100+00.00 Gleason Road

Sta. 41+00.00 to
Sta. 41+92.00
Remove 315 SY
Cart Path

Sta. 99+10.13, 29.87' Lt. (618)
Const. Curb Inlet (L=8', W=4')
Install 45.66 LF of 15" RCP (W)

Sta. 98+91.86
Const. 348.84 SF
Decorative Stamped Concrete

Sta. 99+09.21, 27.26' Rt. (619)
Const. Curb Inlet (L=8', W=4')
Install 53.49 LF of 15" RCP (W)

Curve 11
P.I. Station = 98+08.08
Delta = 25° 49' 00.00" (RT)
Degree = 13° 38' 30.67"
Tangent = 96.2571
Length = 189.2461
Radius = 420.0000

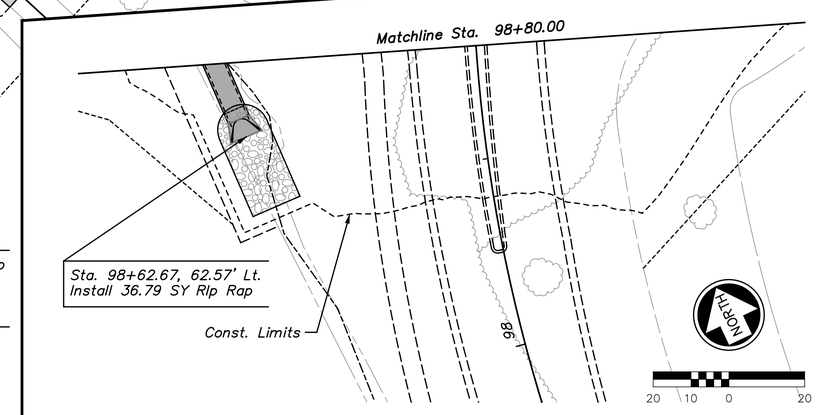

REV.	DATE	REVISIONS	BY	APP'D
1				
2				
3				
4				
5				

Designed By: PRP
Drawn By: JCK/JAA
Checked By: HDL
Issue Date: SEPT. 2016

COPYRIGHT © -2016-SHAFER, KLINE & WARREN INC.

SHAFER, KLINE & WARREN
11250 Corporate Avenue
Lenexa, KS 66219-1392
913.888.7800 FAX: 913.888.7868
SURVEYING | ENGINEERING | CONSTRUCTION

CLEAR CREEK PARKWAY
CITY OF SHAWNEE, KANSAS

PLAN SHEET (7)
STA. 39+80.00 TO STA. 45+00.00

150561-010

LAYOUT: MODEL | BY: jadams | DATE: 20-SEP-2016 10:15:30 AM
L:\150561-010_Cad\Civil\Plan Profiles\150561-010_PL-07.dgn

NOT FOR CONSTRUCTION

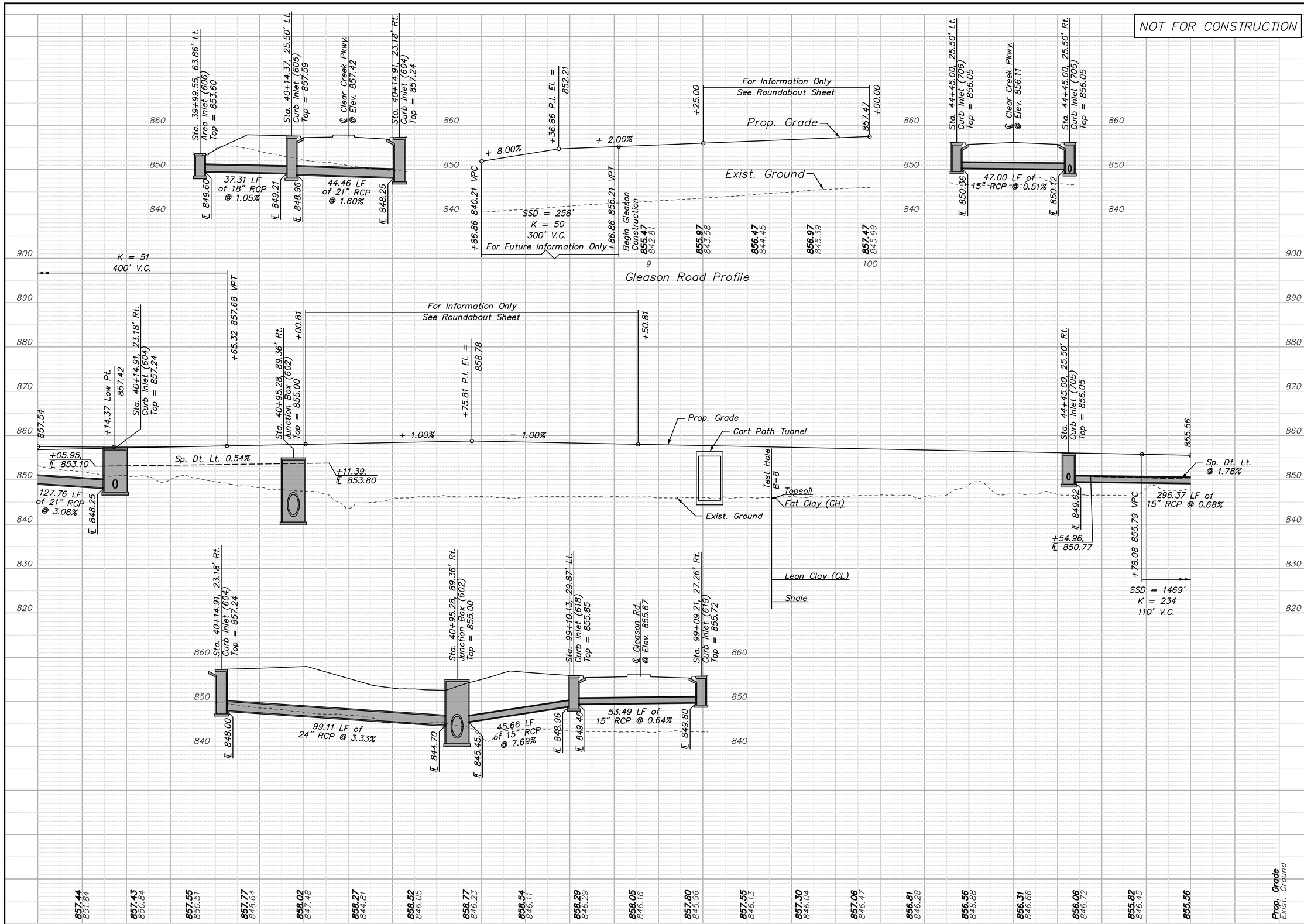

REV.	DATE	REVISIONS	BY	APP'D
1				
2				
3				
4				
5				

Designed By: PRP
Drawn By: JCK/JAA
Checked By: HDL
Issue Date: SEPT. 2016

COPYRIGHT © -2016-SHAFER, KLINE & WARREN INC.

SHAFER, KLINE & WARREN
11250 Corporate Avenue
Lenexa, KS 66219-1392
913.888.7800 FAX: 913.888.7868
SURVEYING | ENGINEERING | CONSTRUCTION

CLEAR CREEK PARKWAY
CITY OF SHAWNEE, KANSAS

PROFILE SHEET (7)
STA. 39+80.00 TO STA. 45+00.00

150561-010

SHEET NO.
27 OF 182

LAYOUT: MODEL | BY: jadams | DATE: 20-SEP-2016 10:16:00 AM
L:\150561-010_Cad\Civil\Plan Profiles\150561-010_PF-07.dgn

NOT FOR CONSTRUCTION

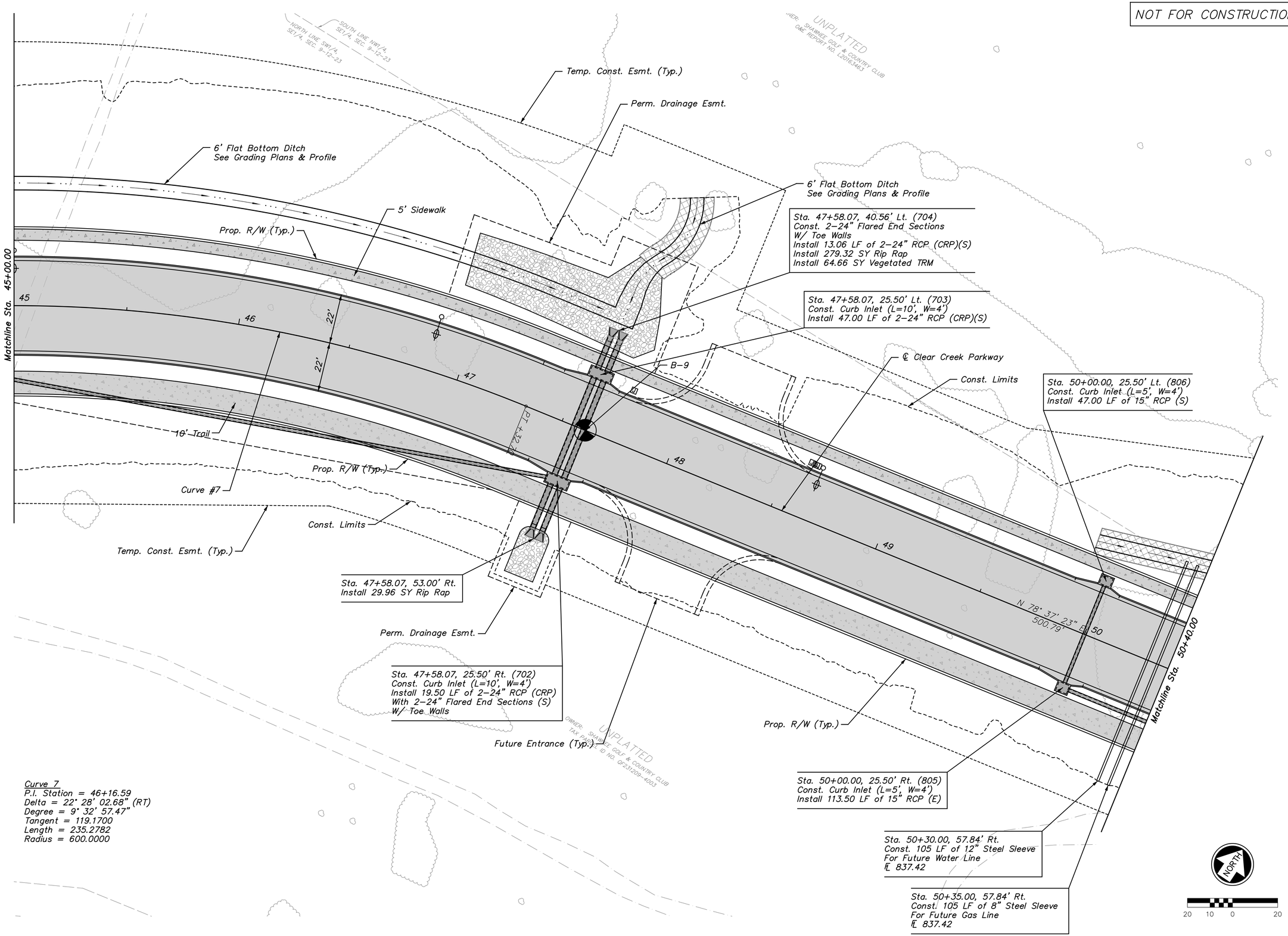

Curve 7
P.I. Station = 46+16.59
Delta = 22° 28' 02.68" (RT)
Degree = 9° 32' 57.47"
Tangent = 119.1700
Length = 235.2782
Radius = 600.0000

REV.	DATE	REVISIONS	BY	APP'D
1				
2				
3				
4				
5				

Designed By: PRP
Drawn By: JCK/JAA
Checked By: HDL
Issue Date: SEPT. 2016

COPYRIGHT © -2016-SHAFER, KLINE & WARREN INC.

SHAFER, KLINE & WARREN
11250 Corporate Avenue
Lenexa, KS 66219-1392
913.888.7800 FAX: 913.888.7868
SURVEYING | ENGINEERING | CONSTRUCTION

CLEAR CREEK PARKWAY
CITY OF SHAWNEE, KANSAS

PLAN SHEET (8)
STA. 45+00.00 TO STA. 50+40.00

150561-010

SHEET NO.
28 OF 182

LAYOUT: MODEL | BY: jadams | DATE: 20-SEP-2016 10:16:14 AM
L:\150561-010_Cad\Civil\Plan Profiles\150561-010_PL-08.dgn

NOT FOR CONSTRUCTION

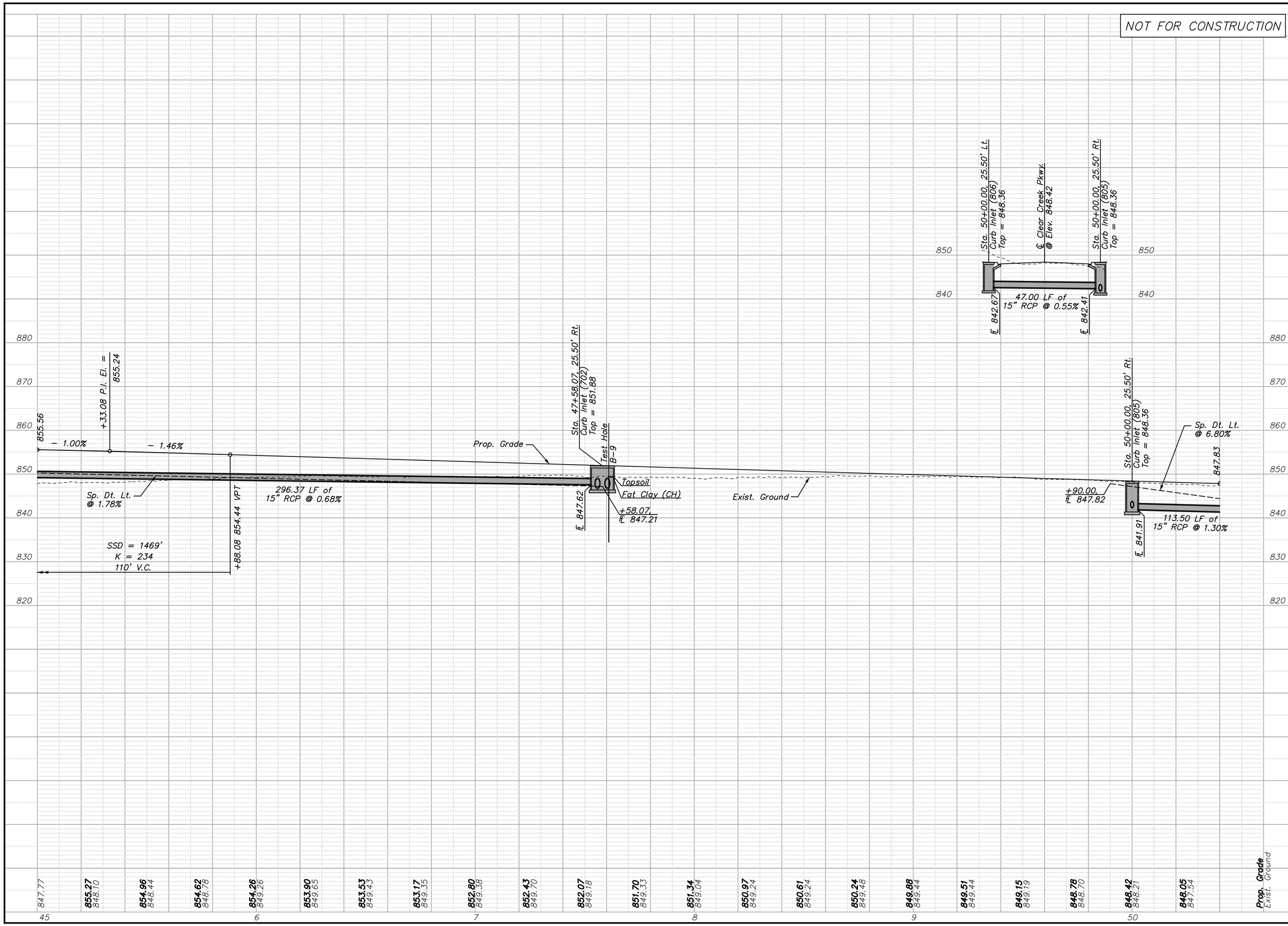

REV.	DATE	REVISIONS	BY	APP'D
1				
2				
3				
4				
5				

Designed By: PRP
Drawn By: JCK/JAA
Checked By: HDL
Issue Date: SEPT. 2016

COPYRIGHT © -2016-SHAFER, KLINE & WARREN INC.

SHAFER, KLINE & WARREN
11250 Corporate Avenue
Lenexa, KS 66219-1392
913.888.7800 FAX: 913.888.7868
SURVEYING | ENGINEERING | CONSTRUCTION

CLEAR CREEK PARKWAY
CITY OF SHAWNEE, KANSAS

PROFILE SHEET (8)
STA. 45+00.00 TO STA. 50+40.00

150561-010

LAYOUT: MODEL | BY: jadams | DATE: 20-SEP-2016 10:16:33 AM
L:\150561-010_Cad\Civil\Plan Profiles\150561-010_PF-08.dgn

NOT FOR CONSTRUCTION

6' Flat Bottom Ditch
See Grading Plans & Profile

Perm. Drainage Esmt.

8' Flat Bottom Ditch
See Grading Plans & Profile

Sta. 51+20.00, 44.78' Lt. (804)
Const. 42" Flared End Section
W/ Toe Wall
Install 17.28 LF of 42" RCP (CRP)(S)
Install 401.66 SY Rip Rap
Install 75.01 SY Vegetated TRM

Sta. 51+20.00, 25.50' Lt. (803)
Const. Curb Inlet (L=8', W=4')
Install 47.00 LF of 42" RCP (S)

Temp. Const. Esmt. (Typ.)

Const. Limits

4' Flat Bottom Ditch
See Profile

Sta. 54+50.00, 25.50' Lt. (908)
Const. Curb Inlet (L=5', W=4')
Install 47.00 LF of 15" RCP (S)

B-10

Prop. R/W (Typ.)

℄ Clear Creek Parkway

5' Sidewalk

B-11

Matchline Sta. 50+40.00

51

52

53

54

55

22'

22'

PC +33.49

PT +66.99

Curve 8

Prop. R/W (Typ.)

Future Entrance (Typ.)

Const. Limits

10' Trail

Matchline Sta. 55+80.00

Sta. 51+20.00, 25.50' Rt. (802)
Const. Curb Inlet (L=8', W=4')
Install 24.69 LF of 42" RCP (CRP)
With 42" Flared End Section (S)
W/ Toe Wall

Perm. Drainage Esmt.

Sta. 50+50.00, 57.84' Rt.
Const. 105 LF of 12" Steel Sleeve
For Future Sanitary Sewer
℄ Right 836.73
℄ Left 841.10

Sta. 51+20.00, 60.36' Rt.
Install 29.81 SY Rip Rap

Sta. 54+50.00, 25.50' Rt. (907)
Const. Curb Inlet (L=5', W=4')
Install 325.28 LF of 15" RCP (E)

Temp. Const. Esmt. (Typ.)

Curve 8
P.I. Station = 53+00.21
Delta = 9° 32' 07.00" (RT)
Degree = 7° 09' 43.10"
Tangent = 66.7229
Length = 133.1376
Radius = 800.0000

NORTH

20 10 0 20

REV.	DATE	REVISIONS	BY	APP'D
1				
2				
3				
4				
5				

Designed By: PRP
Drawn By: JCK/JAA
Checked By: HDL
Issue Date: SEPT. 2016

COPYRIGHT © -2016-SHAFER, KLINE & WARREN INC.

SHAFER, KLINE & WARREN
11250 Corporate Avenue
Lenexa, KS 66219-1392
913.888.7800 FAX: 913.888.7868
SURVEYING | ENGINEERING | CONSTRUCTION

CLEAR CREEK PARKWAY
CITY OF SHAWNEE, KANSAS

PLAN SHEET (9)
STA. 50+40.00 TO STA. 55+80.00

150561-010

SHEET NO.
30 OF 182

LAYOUT: MODEL | BY: jadams | DATE: 20-SEP-2016 10:16:46 AM
L:\150561-010_Cad\Civil\Plan Profiles\150561-010_PL-09.dgn

NOT FOR CONSTRUCTION

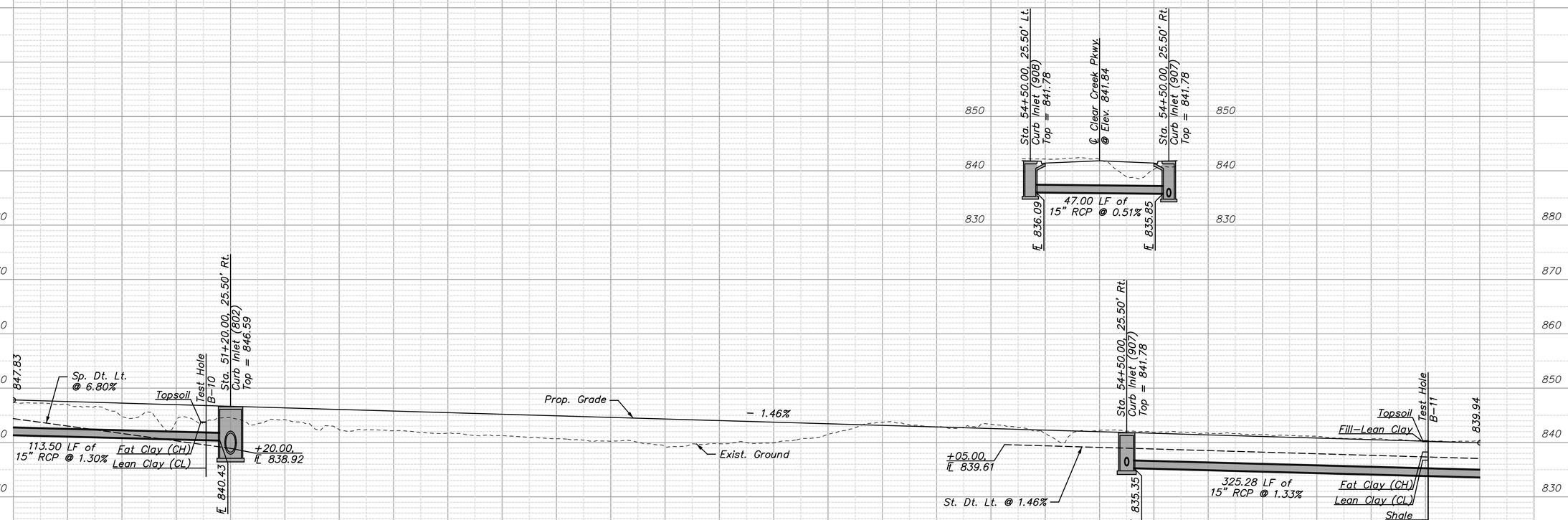

REV.	DATE	REVISIONS	BY	APP'D
1				
2				
3				
4				
5				

Designed By: PRP
Drawn By: JCK/JAA
Checked By: HDL
Issue Date: SEPT. 2016

COPYRIGHT © -2016-SHAFER, KLINE & WARREN INC.

SHAFER, KLINE & WARREN
11250 Corporate Avenue
Lenexa, KS 66219-1392
913.888.7800 FAX: 913.888.7868
SURVEYING | ENGINEERING | CONSTRUCTION

CLEAR CREEK PARKWAY
CITY OF SHAWNEE, KANSAS

PROFILE SHEET (9)
STA. 50+40.00 TO STA. 55+80.00

150561-010

SHEET NO. 31 OF 182

LAYOUT: MODEL | BY: jadams | DATE: 20-SEP-2016 10:17:05 AM
L:\150561-010_Cad\Civil\Plan Profiles\150561-010_PF-09.dgn

NOT FOR CONSTRUCTION

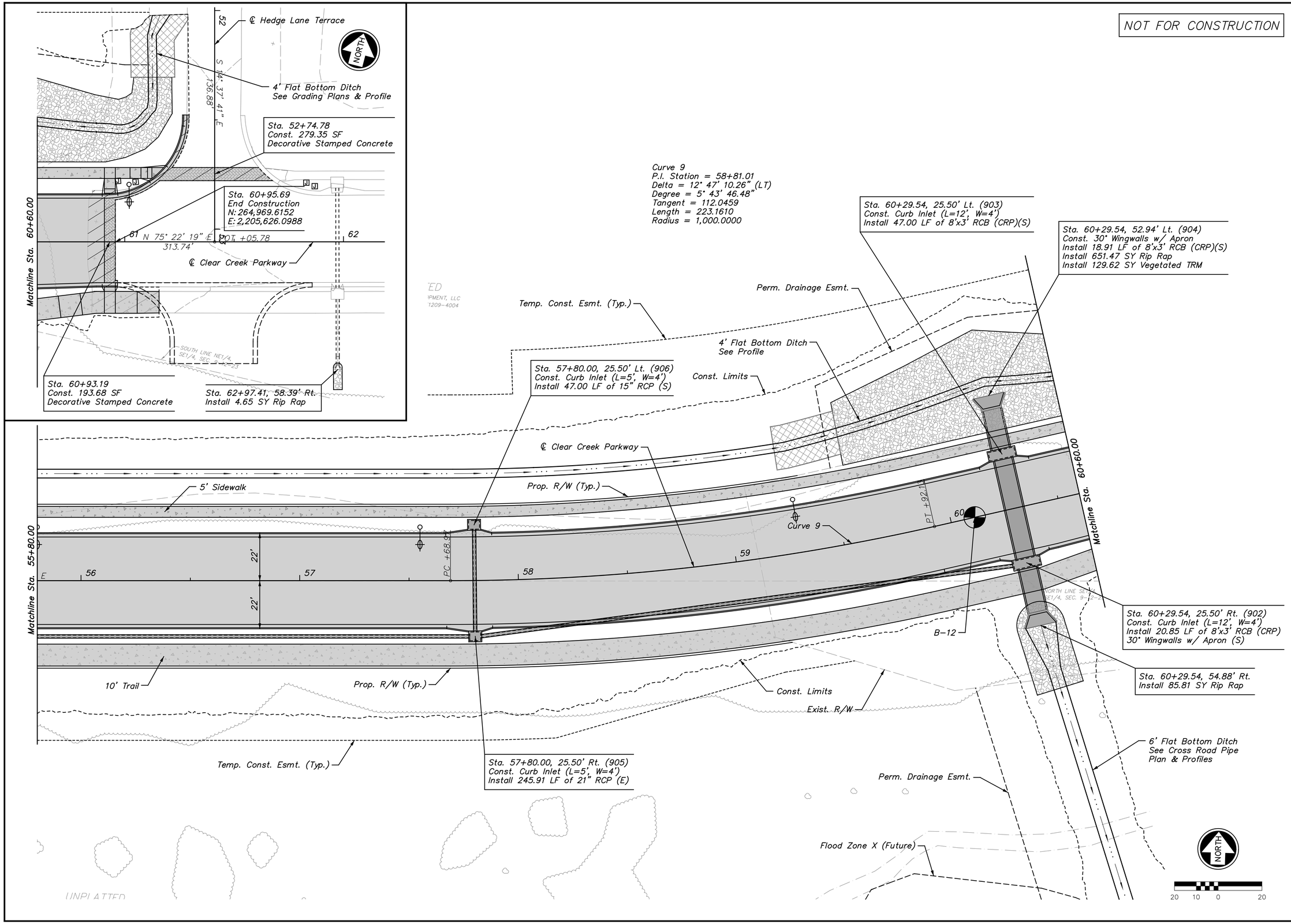

REV.	DATE	REVISIONS	BY	APP'D
5				
4				
3				
2				
1				

Designed By: PRP
Drawn By: JCK/JAA
Checked By: HDL
Issue Date: SEPT. 2016

COPYRIGHT © -2016-SHAFER, KLINE & WARREN INC.

SHAFER, KLINE & WARREN
11250 Corporate Avenue
Lenexa, KS 66219-1392
913.888.7800 FAX: 913.888.7868
SURVEYING | ENGINEERING | CONSTRUCTION

CLEAR CREEK PARKWAY
CITY OF SHAWNEE, KANSAS

PLAN SHEET (10)
STA. 55+80.00 TO STA. 60+87.00

150561-010

SHEET NO.
32 OF 182

LAYOUT: MODEL | BY: jadams | DATE: 20-SEP-2016 10:17:18 AM
L:\150561-010_Cad\Civil\Plan Profiles\150561-010_PL-10.dgn

NOT FOR CONSTRUCTION

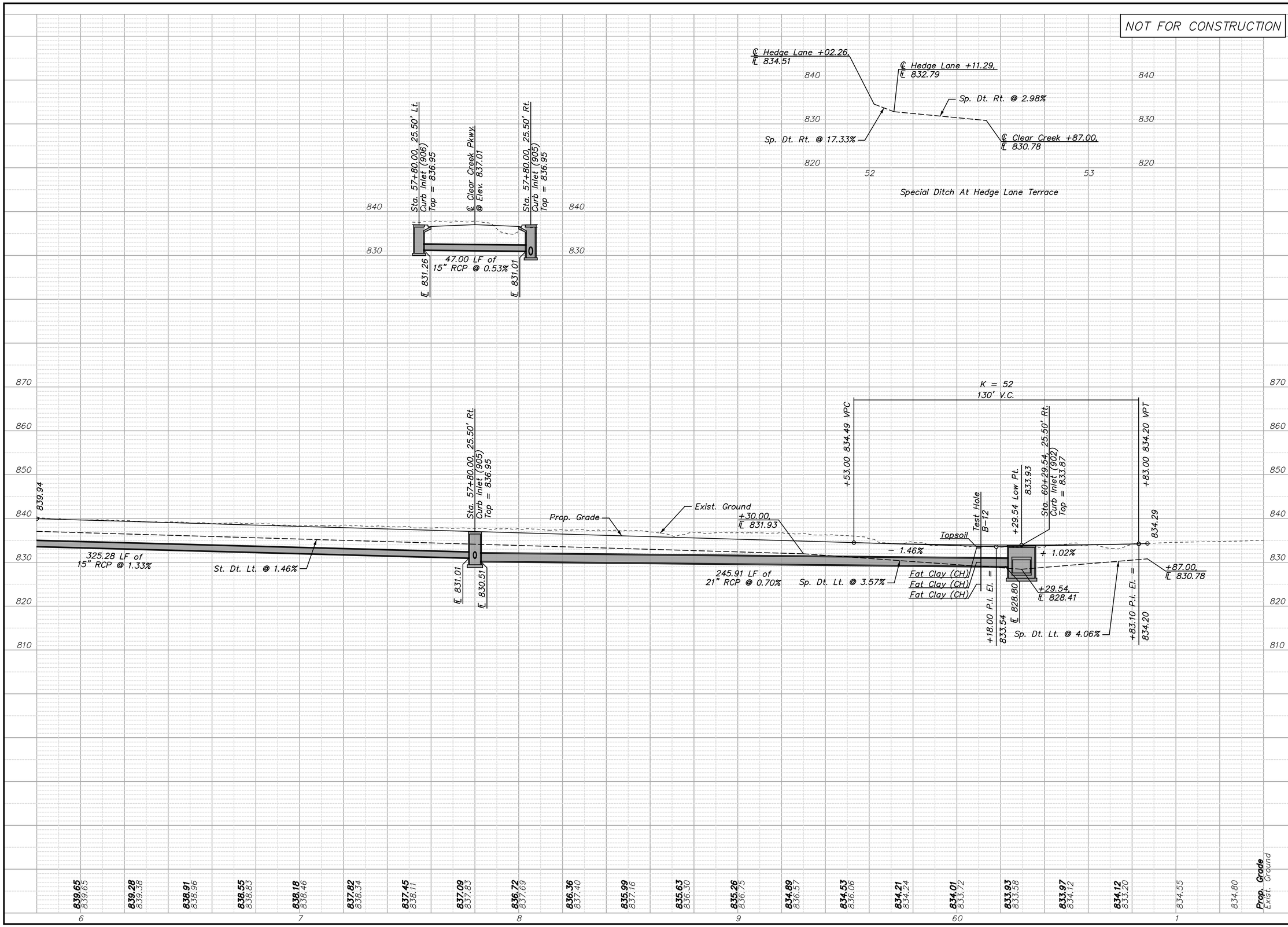

REV.	DATE	REVISIONS	BY	APP'D
5				
4				
3				
2				
1				

Designed By: PRP
Drawn By: JCK/JAA
Checked By: HDL
Issue Date: SEPT. 2016

COPYRIGHT © -2016-SHAFER, KLINE & WARREN INC.

SHAFER, KLINE & WARREN
11250 Corporate Avenue
Lenexa, KS 66219-1392
913.888.7800 FAX: 913.888.7868
SURVEYING | ENGINEERING | CONSTRUCTION

CLEAR CREEK PARKWAY
CITY OF SHAWNEE, KANSAS

PROFILE SHEET (10)
STA. 55+80.00 TO STA. 60+87.00

150561-010

SHEET NO.
33 OF 182

LAYOUT: MODEL | BY: jadams | DATE: 20-SEP-2016 10:17:54 AM
L:\150561-010_Cad\Civil\Plan Profiles\150561-010_PF-10.dgn

NOT FOR CONSTRUCTION

Curve 13
P.I. Station = 2+74.78
Delta = 42° 09' 42.50" (LT)
Degree = 114° 35' 29.61"
Tangent = 19.2742
Length = 36.7931
Radius = 50.0000

Curve 14
P.I. Station = 3+22.60
Delta = 26° 50' 23.00" (LT)
Degree = 45° 06' 53.23"
Tangent = 30.3022
Length = 59.4921
Radius = 127.0000

Curve 12
P.I. Station = 1+24.16
Delta = 17° 04' 49.46" (RT)
Degree = 114° 35' 29.61"
Tangent = 7.5084
Length = 14.9055
Radius = 50.0000

Curve 15
P.I. Station = 3+92.41
Delta = 78° 10' 49.69" (RT)
Degree = 114° 35' 29.61"
Tangent = 40.6197
Length = 68.2253
Radius = 50.0000

Modular Block Retaining Wall
See Retaining Wall Plan & Profiles

Exist. R/W

Temp. Const. Esmt.

Const. Limits

Sta. 4+11.67, 9.61' Lt.
Tie To Exist. Irrigation Line

Temp. Const. Esmt.

℄ Cart Path

Sta. 4+21.06
End Golf Cart Const.
N: 264,795.5235
E: 2,203,756.4425

Curve 15
10' Golf Cart Path

Sta. 1+09.83, 9.00' Lt.
Tie to Exist. Irrigation Line
Install 328 LF of 4" PVC
Irrigation Line

Offset 59'
Right

Curve 12

Curve 14

Curve 13

Sta. 0+90.84
Begin Golf Cart Const.
N: 264,519.8429
E: 2,203,884.0255

Offset 53'
Left

Sta. 1+32.10, 15.00' Rt.
Const. 127 LF of 8" Steel Sleeve
℄ 839.00, Slope = Level

Sta. 1+98.10
Const. 10'x10'x112' RCB
(Cart Path Tunnel)
See RCB Details

℄ Sta. 42+83.07 Clear Creek Parkway =
℄ Sta. 1+98.10 Cart Path

℄ Clear Creek Parkway

Sta. 2+58.27, 15.10' Rt.

2' Top of Berm

Perm. Drainage Esmt.

Const. Limits

NORTH

20 10 0 20

Top of Berm Vertical:
A Sta. 2+60.90 Elev. 851.38
B Sta. 2+67.50 Elev. 850.51
C Sta. 2+77.00 Elev. 850.62
D Sta. 2+87.00 Elev. 850.82
E Sta. 2+97.00 Elev. 851.03
F Sta. 3+07.00 Elev. 851.26
G Sta. 3+17.00 Elev. 851.49
H Sta. 3+26.66 Elev. 851.61

K = 2
20' V.C.

K = 7
24' V.C.

Elev. 858.29
Elev. 857.72

Top Of Berm

+ 12.00%

+ 1.00%

+ 4.66%

+ 2.60%

Elev. 843.84

Elev. 846.76

+67.50,
℄ 849.51

Sp. Dt. Rt.
@ 7.69%

+26.66,
℄ 842.71

112' LF
10'x10' RCB
(Cart Path Tunnel)

+52.61 846.80 VPC
+72.61 848.26 VPT
+62.61 P.I. El. = 847.06
+30.54 P.I. El. = 855.21
+20.54 854.01 VPC
+46.20 855.37 VPC
+40.54 855.31 VPT
+70.58 856.06 VPT
+58.39 P.I. El. = 855.49

842.59
858.42

838.68	839.95	841.22	842.28	**842.83** 842.97	**843.48** 843.81	**844.13** 844.61	**844.78** 845.36	**845.43** 845.86	**846.08** 846.88	**846.73** 847.89	**848.55** 848.96	**851.55** 849.75	**854.49** 848.00	**855.42** 850.22	**856.26** 852.65	**857.43** 856.53	858.63	859.44	

0 1 2 3 4

860 850 840 830 820 810 800

REV.	DATE	REVISIONS	BY	APP'D
5				
4				
3				
2				
1				

Designed By: PRP
Drawn By: JCK/JAA
Checked By: HDL
Issue Date: SEPT. 2016

COPYRIGHT © -2016-SHAFER, KLINE & WARREN INC.

SHAFER, KLINE & WARREN
11250 Corporate Avenue
Lenexa, KS 66219-1392
913.888.7800 FAX: 913.888.7868
SURVEYING | ENGINEERING | CONSTRUCTION

CLEAR CREEK PARKWAY
CITY OF SHAWNEE, KANSAS

PLAN AND PROFILE SHEET (11)
CART PATH TUNNEL

150561-010

SHEET NO.
34 OF 182

LAYOUT: MODEL | BY: jadams | DATE: 20-SEP-2016 10:18:08 AM
L:\150561-010_Cad\Civil\Plan Profiles\150561-010_PP-11.dgn

NOT FOR CONSTRUCTION

Sta. 10+44.16, 10.65' Lt. (1101)
Remove 24" HEPFES (East Pipe)
Install 10.28 LF 24" HEP & 24" HEPFES (East Pipe)
Remove 24" HEPFES (West Pipe)
Install 10.32 LF 24" HEP & 24" HEPFES (West Pipe)
Install 29.96 SY Rip Rap

Floodway Area Zone AE

15' U/E (PER PLAT)

ESMT. TO K.C.P.L. CO. IN COND. CASE NO. 87C2512 IN VOL. 2857, PG. 450

Temp. Const. Esmt.

15' SAN. SEWER ESMT. IN BK. 4685, PG. 621

10' Trail

Const. Limits

Curve 17

Curve 16
P.I. Station = 10+20.53
Delta = 12° 55' 27.38" (LT)
Degree = 31° 36' 12.38"
Tangent = 20.5347
Length = 40.8951
Radius = 181.2960

11 12 13 14 15

N 0° 24' 50" E
705.41

Matchline Sta. 15+40.00

PCT +93.85

℄ Trail Connection

Const. Limits

Exist. KDOT R/W

Sta. 11+25.00
Instal 116 LF of Wire Fence
To Exist. KDOT Bridge Abutment

Sta. 11+25.00 to Sta. 12+60.00
Remove & Replace 136 LF of
Exist. Wire Fence

Sta. 10+47.00 to Sta. 12+60.00
Remove 105 LF of
Exist. Wire Fence

Curve 16

PC +00.00

10

Sta. 10+38.84
Match Exist. Trail
Begin Construction of
Trail Connection
N: 264,158.3388
E: 2,206,071.6717

Flood Zone AE

Sta. 10+46.22, 14.59' Rt. (1102)
Remove 24" HEPFES (East Pipe)
Install 7.85 LF 24" HEP & 24" HEPFES (East Pipe)
Remove 24" HEPFES (West Pipe)
Install 7.78 LF 24" HEP & 24" HEPFES (West Pipe)
Install 29.96 SY Rip Rap

Curve 17
P.I. Station = 10+73.47
Delta = 84° 17' 01.47" (RT)
Degree = 159° 09' 17.80"
Tangent = 32.5763
Length = 52.9570
Radius = 36.0000

NORTH

20 10 0 20

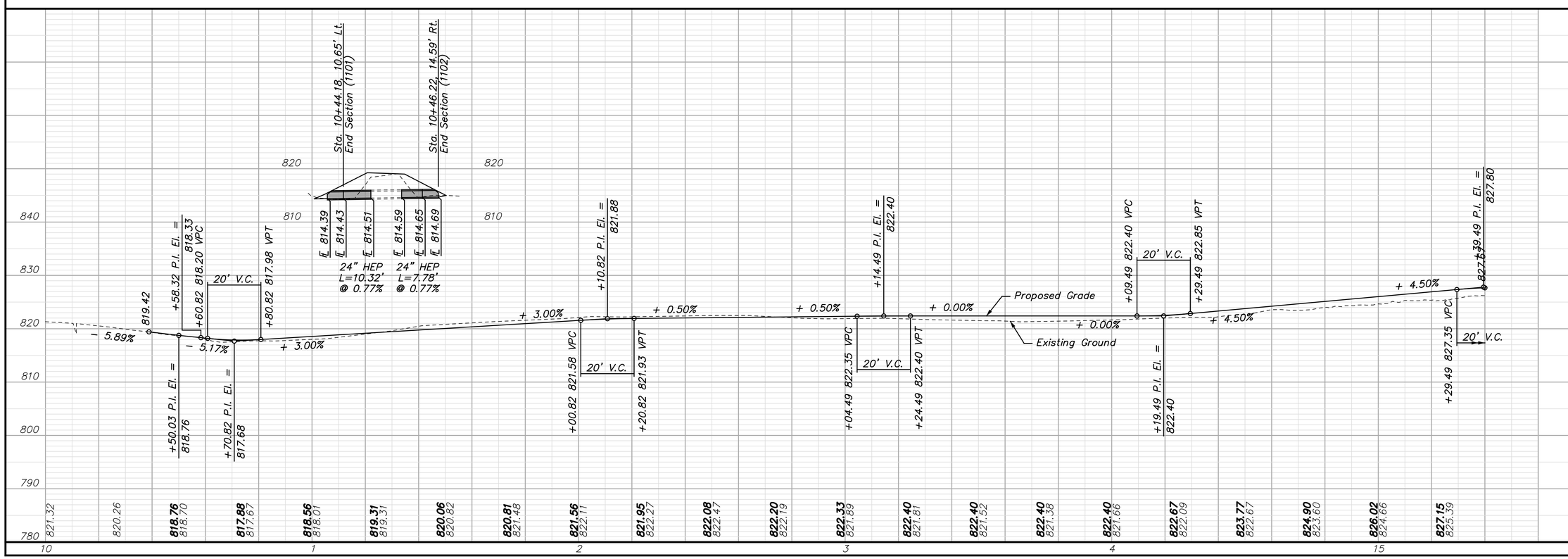

REV.	DATE	REVISIONS	BY	APP'D
1				
2				
3				
4				
5				

Designed By: PRP
Drawn By: JCK/JAA
Checked By: HDL
Issue Date: SEPT. 2016

COPYRIGHT © -2016-SHAFER, KLINE & WARREN INC.

SHAFER, KLINE & WARREN
11250 Corporate Avenue
Lenexa, KS 66219-1392
913.888.7800 FAX: 913.888.7868
SURVEYING | ENGINEERING | CONSTRUCTION

CLEAR CREEK PARKWAY
CITY OF SHAWNEE, KANSAS

PLAN AND PROFILE SHEET (12)
TRAIL STA. 10+00.00 TO STA. 15+40.00

150561-010

SHEET NO.
35 OF 182

LAYOUT: MODEL | BY: jadams | DATE: 20-SEP-2016 10:18:28 AM
L:\150561-010_Cad\Civil\Plan Profiles\150561-010_PP-12.dgn

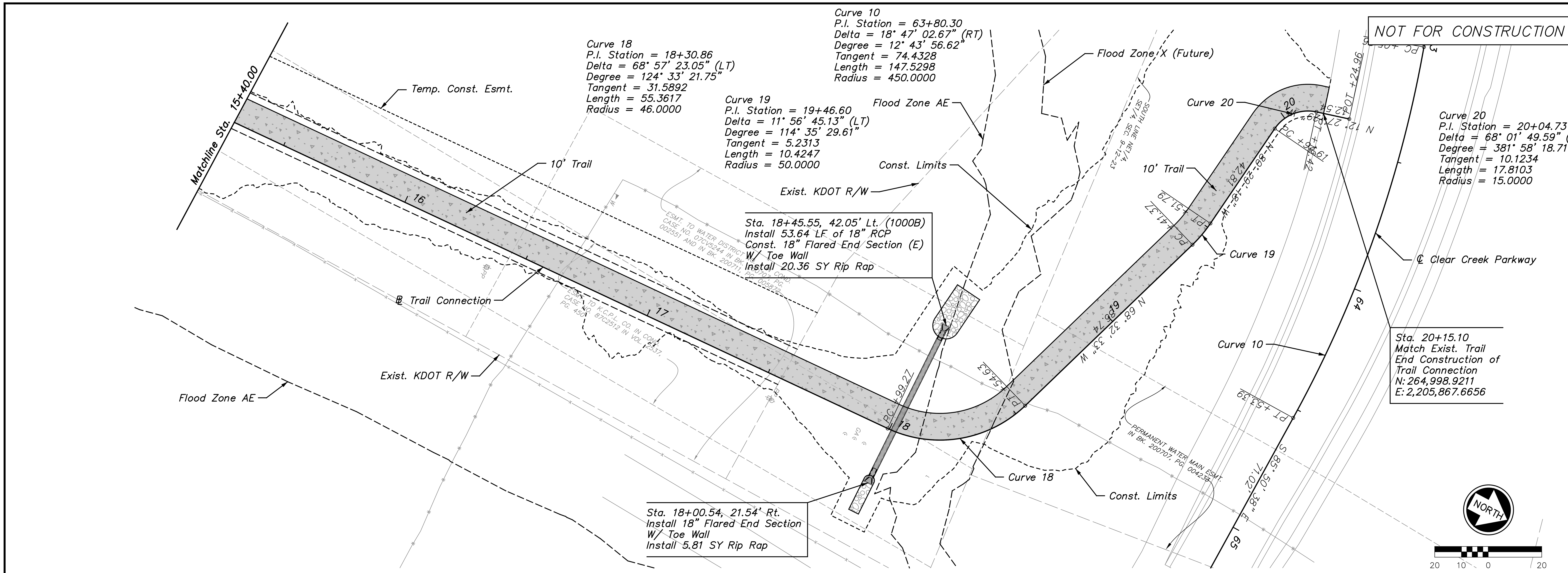

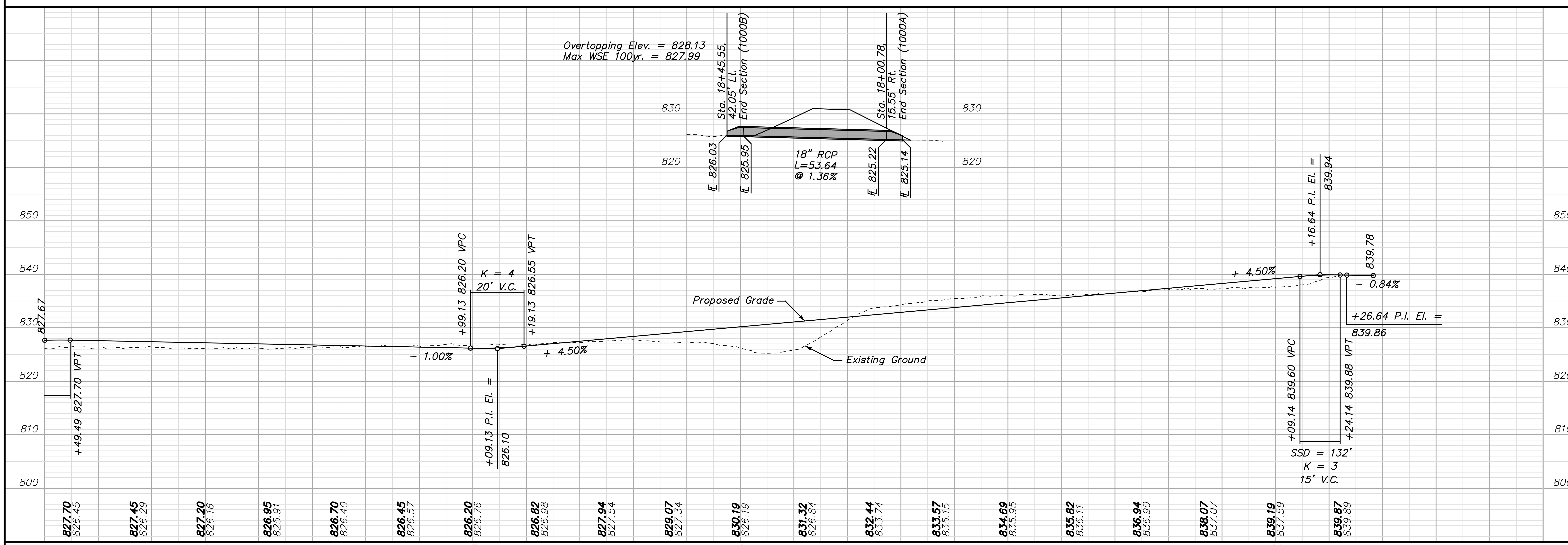

LAYOUT: MODEL | BY: jadams | DATE: 20-SEP-2016 10:18:30 AM
L:\150561-010_Cad\Civil\Plan Profiles\150561-010_PP-13.dgn

REV.	DATE	REVISIONS	BY	APP'D
5				
4				
3				
2				
1				

COPYRIGHT © -2016-SHAFER, KLINE & WARREN INC.

Designed By: PRP
Drawn By: JCK/JAA
Checked By: HDL
Issue Date: SEPT. 2016

SHAFER, KLINE & WARREN
11250 Corporate Avenue
Lenexa, KS 66219-1392
913.888.7800 FAX: 913.888.7868
SURVEYING | ENGINEERING | CONSTRUCTION

CLEAR CREEK PARKWAY
CITY OF SHAWNEE, KANSAS

PLAN AND PROFILE SHEET (13)
TRAIL STA. 15+40.00 TO STA. 20+24.96

150561-010

NOT FOR CONSTRUCTION

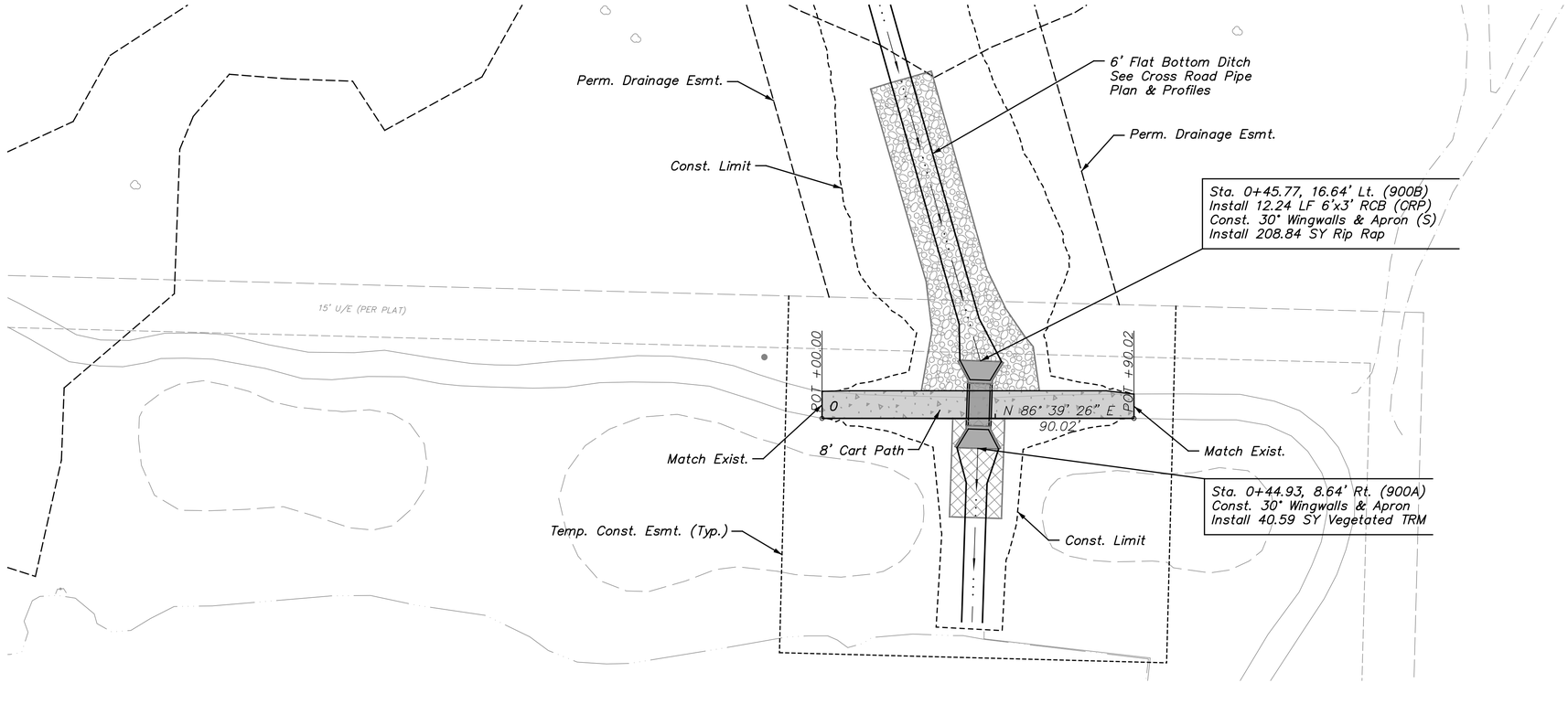

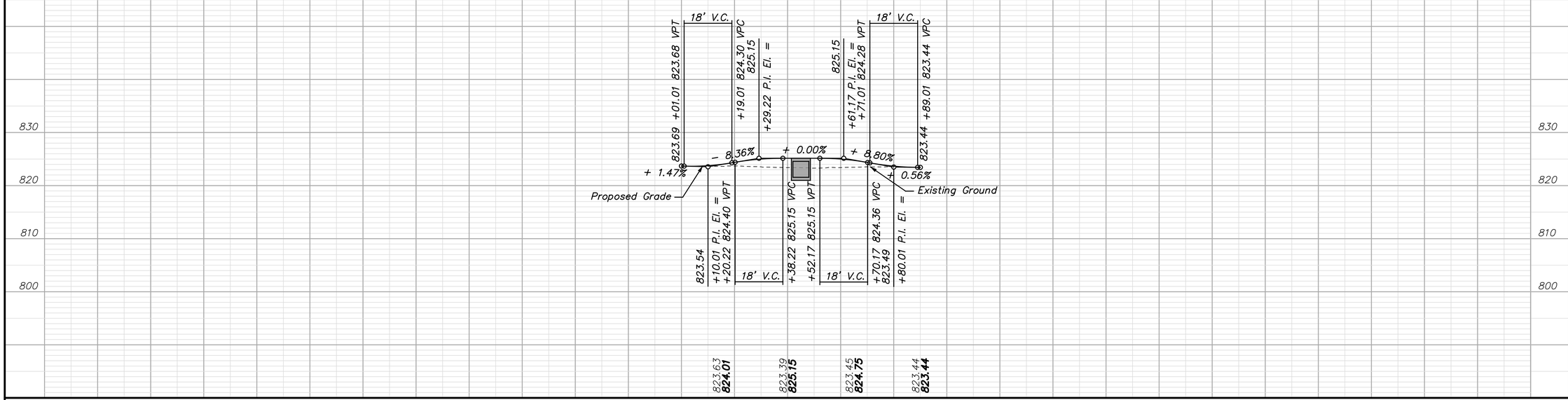

REV.	DATE	REVISIONS	BY	APP'D
5				
4				
3				
2				
1				

Designed By: PRP
Drawn By: JCK/JAA
Checked By: HDL
Issue Date: SEPT. 2016

COPYRIGHT © -2016-SHAFER, KLINE & WARREN INC.

SHAFER, KLINE & WARREN
11250 Corporate Avenue
Lenexa, KS 66219-1392
913.888.7800 FAX: 913.888.7868
SURVEYING | ENGINEERING | CONSTRUCTION

CLEAR CREEK PARKWAY
CITY OF SHAWNEE, KANSAS

PLAN AND PROFILE SHEET (14)
GOLF CART PATH RECONSTRUCTION

150561-010

SHEET NO.
37 OF 182

LAYOUT: MODEL | BY: jadams | DATE: 20-SEP-2016 10:18:32 AM
L:\150561-010_Cad\Civil\Plan Profiles\150561-010_PP-14.dgn

NOT FOR CONSTRUCTION

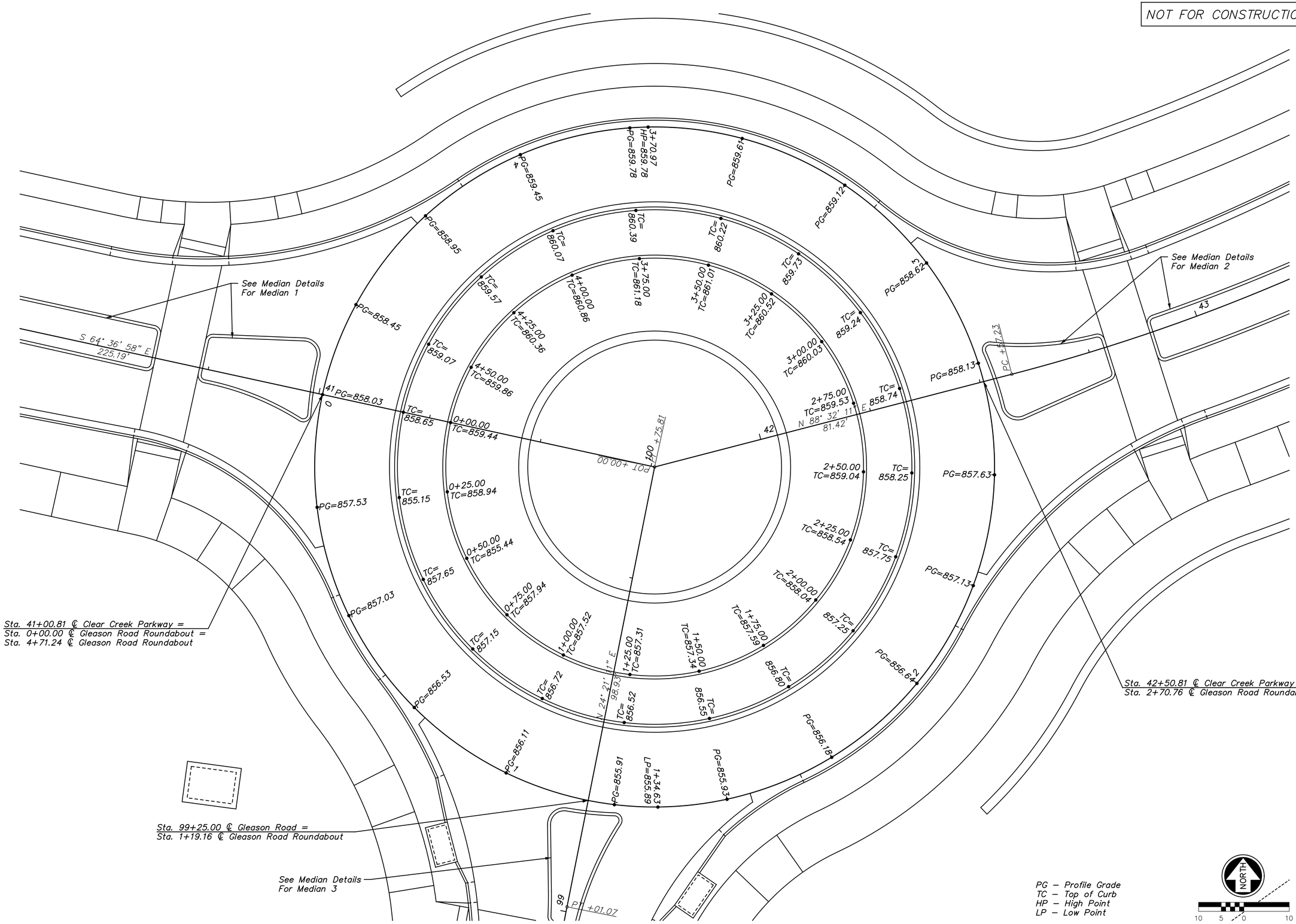

REV.	DATE	REVISIONS	BY	APP'D
1				
2				
3				
4				
5				

Designed By: PRP
Drawn By: JCK/JAA
Checked By: HDL
Issue Date: SEPT. 2016

COPYRIGHT © -2016-SHAFER, KLINE & WARREN INC.

SHAFER, KLINE & WARREN
11250 Corporate Avenue
Lenexa, KS 66219-1392
913.888.7800 FAX: 913.888.7868
SURVEYING | ENGINEERING | CONSTRUCTION

CLEAR CREEK PARKWAY
CITY OF SHAWNEE, KANSAS

ROUNDABOUT PLAN

150561-010

LAYOUT: MODEL | BY: jadams | DATE: 20-SEP-2016 10:18:51 AM
L:\150561-010_Cad\Civil\Intersection Details\150561-010_RB-PLAN-01.dgn

NOT FOR CONSTRUCTION

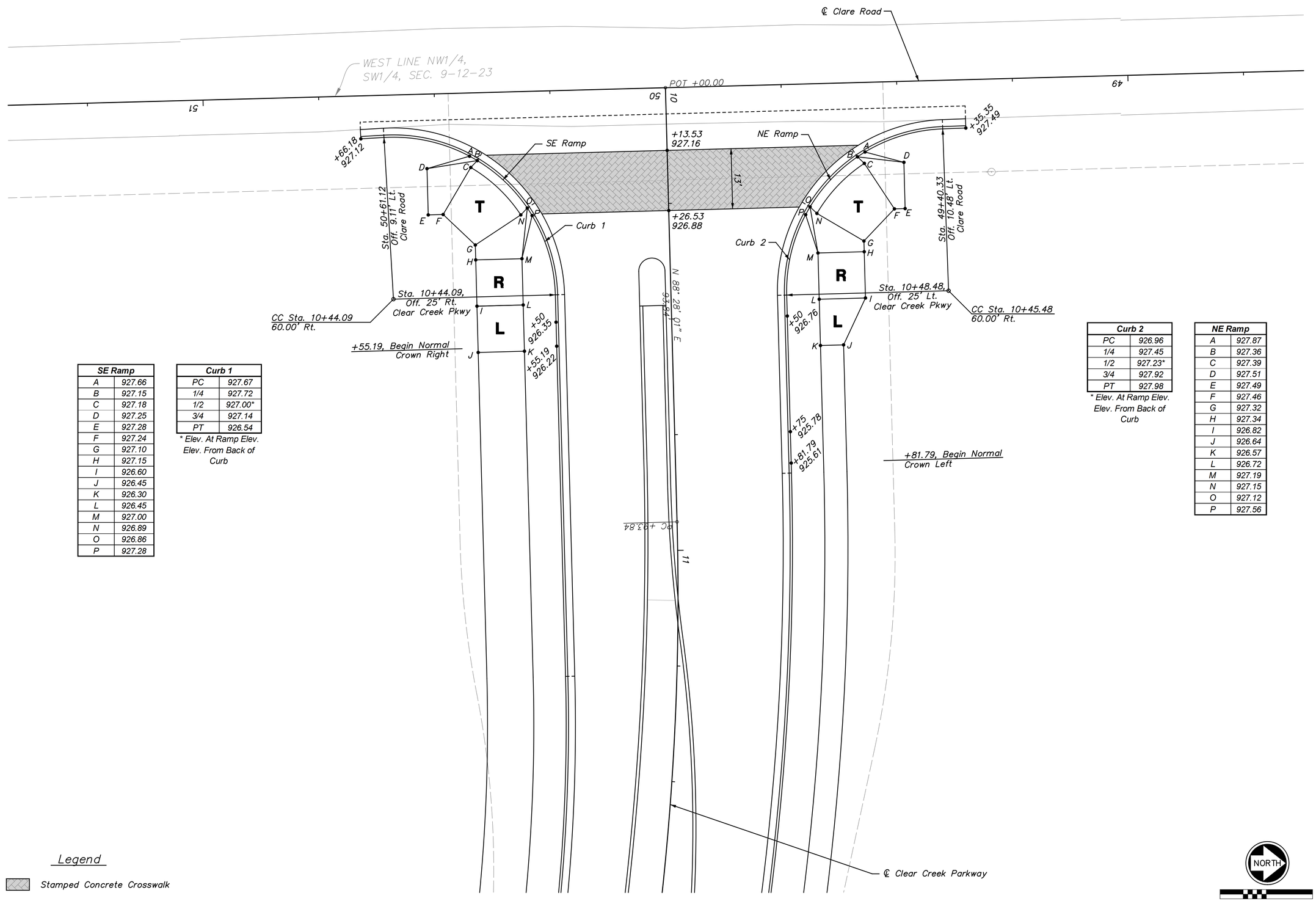

SE Ramp	
A	927.66
B	927.15
C	927.18
D	927.25
E	927.28
F	927.24
G	927.10
H	927.15
I	926.60
J	926.45
K	926.30
L	926.45
M	927.00
N	926.89
O	926.86
P	927.28

Curb 1	
PC	927.67
1/4	927.72
1/2	927.00*
3/4	927.14
PT	926.54

* Elev. At Ramp Elev.
Elev. From Back of Curb

Curb 2	
PC	926.96
1/4	927.45
1/2	927.23*
3/4	927.92
PT	927.98

* Elev. At Ramp Elev.
Elev. From Back of Curb

NE Ramp	
A	927.87
B	927.36
C	927.39
D	927.51
E	927.49
F	927.46
G	927.32
H	927.34
I	926.82
J	926.64
K	926.57
L	926.72
M	927.19
N	927.15
O	927.12
P	927.56

Legend

Stamped Concrete Crosswalk

NORTH

10 5 0 10

REV.	DATE	REVISIONS	BY	APP'D
1				
2				
3				
4				
5				

Designed By: PRP
Drawn By: JCK/JAA
Checked By: HDL
Issue Date: SEPT. 2016

COPYRIGHT © -2016-SHAFER, KLINE & WARREN INC.

SHAFER, KLINE & WARREN
11250 Corporate Avenue
Lenexa, KS 66219-1392
913.888.7800 FAX: 913.888.7868
SURVEYING | ENGINEERING | CONSTRUCTION

CLEAR CREEK PARKWAY
CITY OF SHAWNEE, KANSAS

INTERSECTION DETAIL (1)
CLARE ROAD & CLEAR CREEK PARKWAY

150561-010

LAYOUT: MODEL | BY: jadams | DATE: 20-SEP-2016 10:18:58 AM
L:\150561-010_Cad\Civil\Intersection Details\150561-010_ISD-01.dgn

NOT FOR CONSTRUCTION

Back of Curb Curve Data				
Curve #	Radius	Radius CC Info		
		Station	Offset	Alignment
C-1	398.00	12+03.54	420.00' Rt.	Clear Creek
C-2	602.00	10+83.95	577.00' Rt.	Clear Creek
M-1*	2.83	10+39.53	4.00' Rt.	Clear Creek
M-2	675.67	14+04.89	679.08' Rt.	Clear Creek
M-3	592.67	13+79.68	600.00' Rt.	Clear Creek
M-4	7.33	12+15.00	0.00' Lt.	Clear Creek
M-5	607.33	13+79.68	600.00' Rt.	Clear Creek
M-6	300.17	12+08.44	292.83' Rt.	Clear Creek
M-7	299.83	10+86.70	298.00' Lt.	Clear Creek

* Information along edge of pavement.

Top of Median Curb Points					
Point #	Alignment	Station	Offset	Elevation	Description
20*	Clear Creek	10+39.53	1.17' Rt.	926.86	P.T.
21*	Clear Creek	10+36.70	4.00' Rt.	926.85	1/2 Pt.
22*	Clear Creek	10+39.53	6.83' Rt.	926.75	P.T.
23	Clear Creek	10+47.00	6.17' Rt.	926.74	P.O.T.
24	Clear Creek	10+79.98	6.17' Rt.	925.98	P.T.
25	Clear Creek	11+08.49	6.58' Rt.	925.32	1/4 Pt.
26	Clear Creek	11+37.16	7.00' Rt.	924.64	1/2 Pt.
27	Clear Creek	11+65.86	7.25' Rt.	923.98	3/4 Pt.
28	Clear Creek	11+94.56	7.33' Rt.	923.32	P.C.C.
29	Clear Creek	12+04.78	7.33' Rt.	923.08	1/2 Pt.
30	Clear Creek	12+15.00	7.33' Rt.	922.85	P.R.C.
31	Clear Creek	12+22.33	0.04' Lt.	922.83	1/2 Pt.
32	Clear Creek	12+15.00	7.33' Lt.	922.85	P.C.C.
33	Clear Creek	12+11.72	7.33' Lt.	922.93	1/2 Pt.
34	Clear Creek	12+08.44	7.33' Lt.	923.00	P.C.C.
35	Clear Creek	11+86.18	6.91' Lt.	923.52	1/4 Pt.
36	Clear Creek	11+63.92	5.62' Lt.	924.06	1/2 Pt.
37	Clear Creek	11+41.65	3.49' Lt.	924.62	3/4 Pt.
38	Clear Creek	11+19.40	0.50' Lt.	925.19	P.R.C.
39	Clear Creek	11+03.10	1.31' Rt.	925.58	1/2 Pt.
40	Clear Creek	10+86.70	1.83' Rt.	925.97	P.T.
41	Clear Creek	10+47.00	1.83' Rt.	926.86	P.O.T.

* Information along edge of pavement.

Back of Curb Points					
Point #	Alignment	Station	Offset	Elevation	Description
1	Clear Creek	10+44.09	25.00' Rt.	926.39	P.T.
2	Clear Creek	10+75.00	25.00' Rt.	925.62	P.O.T.
3	Clear Creek	11+00.00	25.00' Rt.	925.05	P.O.T.
4	Clear Creek	11+27.96	24.07' Rt.	924.42	P.C.
5	Clear Creek	11+46.87	23.16' Rt.	924.00	1/4 Pt.
6	Clear Creek	11+65.77	22.52' Rt.	923.58	1/2 Pt.
7	Clear Creek	11+84.66	22.13' Rt.	923.15	3/4 Pt.
8	Clear Creek	12+03.54	22.00' Rt.	922.72	P.T.
9	Clear Creek	10+45.48	25.00' Lt.	926.82	P.O.T.
10	Clear Creek	10+83.95	25.00' Lt.	925.41	P.C.
11	Clear Creek	10+18.91	24.47' Lt.	924.62	1/4 Pt.
12	Clear Creek	11+53.52	23.78' Lt.	923.84	1/2 Pt.
13	Clear Creek	11+88.16	23.02' Lt.	923.05	3/4 Pt.
14	Clear Creek	12+22.85	22.18' Lt.	922.27	P.T.
15	Clear Creek	12+37.37	22.00' Lt.	921.94	P.C.

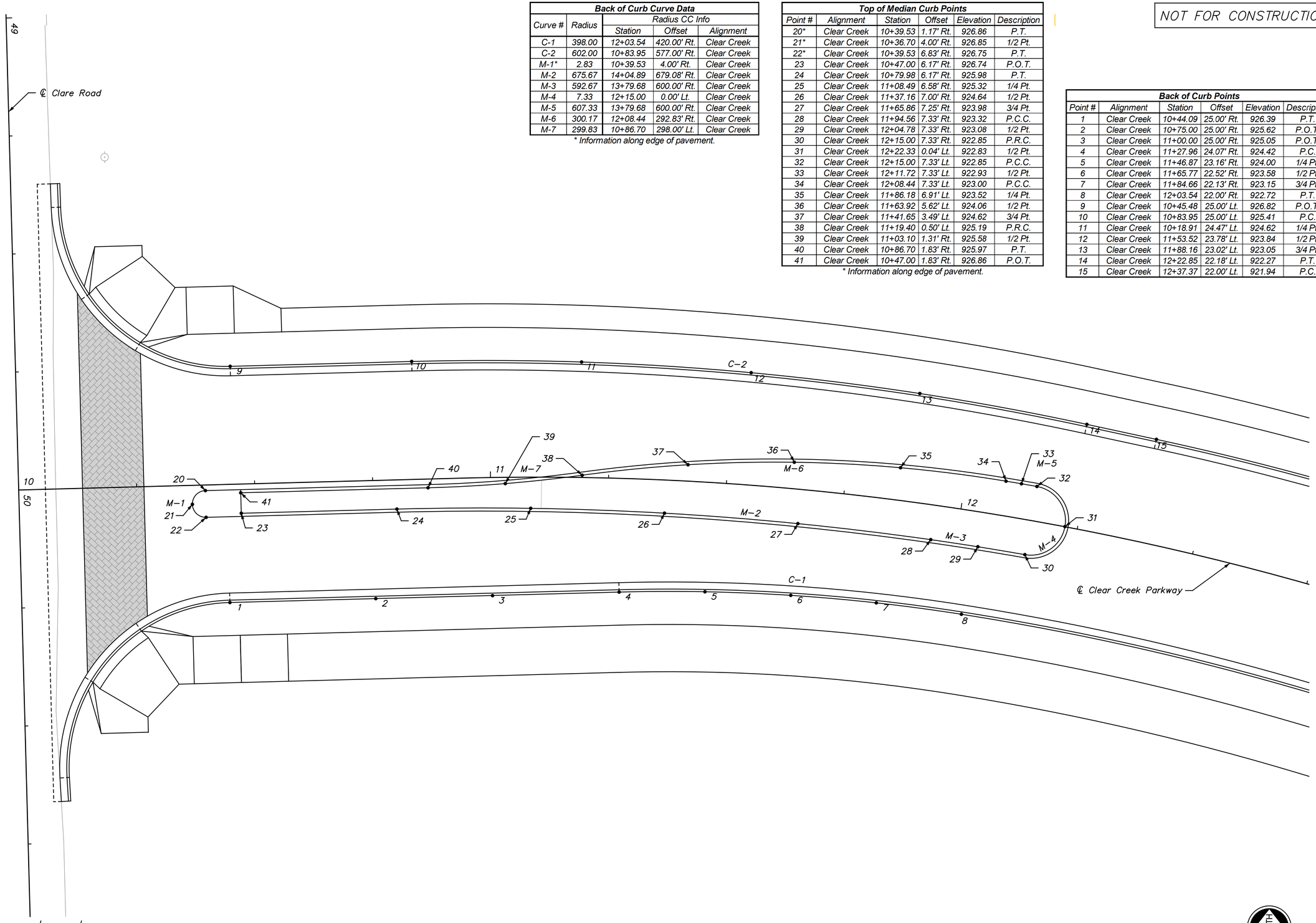

REV.	DATE	REVISIONS	BY	APP'D
5				
4				
3				
2				
1				

Designed By: PRP
Drawn By: JCK/JAA
Checked By: HDL
Issue Date: SEPT. 2016

COPYRIGHT © -2016-SHAFER, KLINE & WARREN INC.

SHAFER, KLINE & WARREN
11250 Corporate Avenue
Lenexa, KS 66219-1392
913.888.7800 FAX: 913.888.7868
SURVEYING | ENGINEERING | CONSTRUCTION

CLEAR CREEK PARKWAY
CITY OF SHAWNEE, KANSAS

INTERSECTION DETAIL (2)
CLARE ROAD & CLEAR CREEK PARKWAY

150561-010

LAYOUT: MODEL | BY: jadams | DATE: 20-SEP-2016 10:19:01 AM
L:\150561-010_Cad\Civil\Intersection Details\150561-010_ISD-02.dgn

NOT FOR CONSTRUCTION

RB Ramp NNW	
A	858.46
B	857.99
C	858.02
D	858.05
E	858.09
F	858.49
G	858.39
H	858.46
I	858.56
J	858.16
K	858.35
L	859.06
M	859.13
N	859.06
O	858.99
P	858.28
Q	858.21
R	858.18
S	858.67

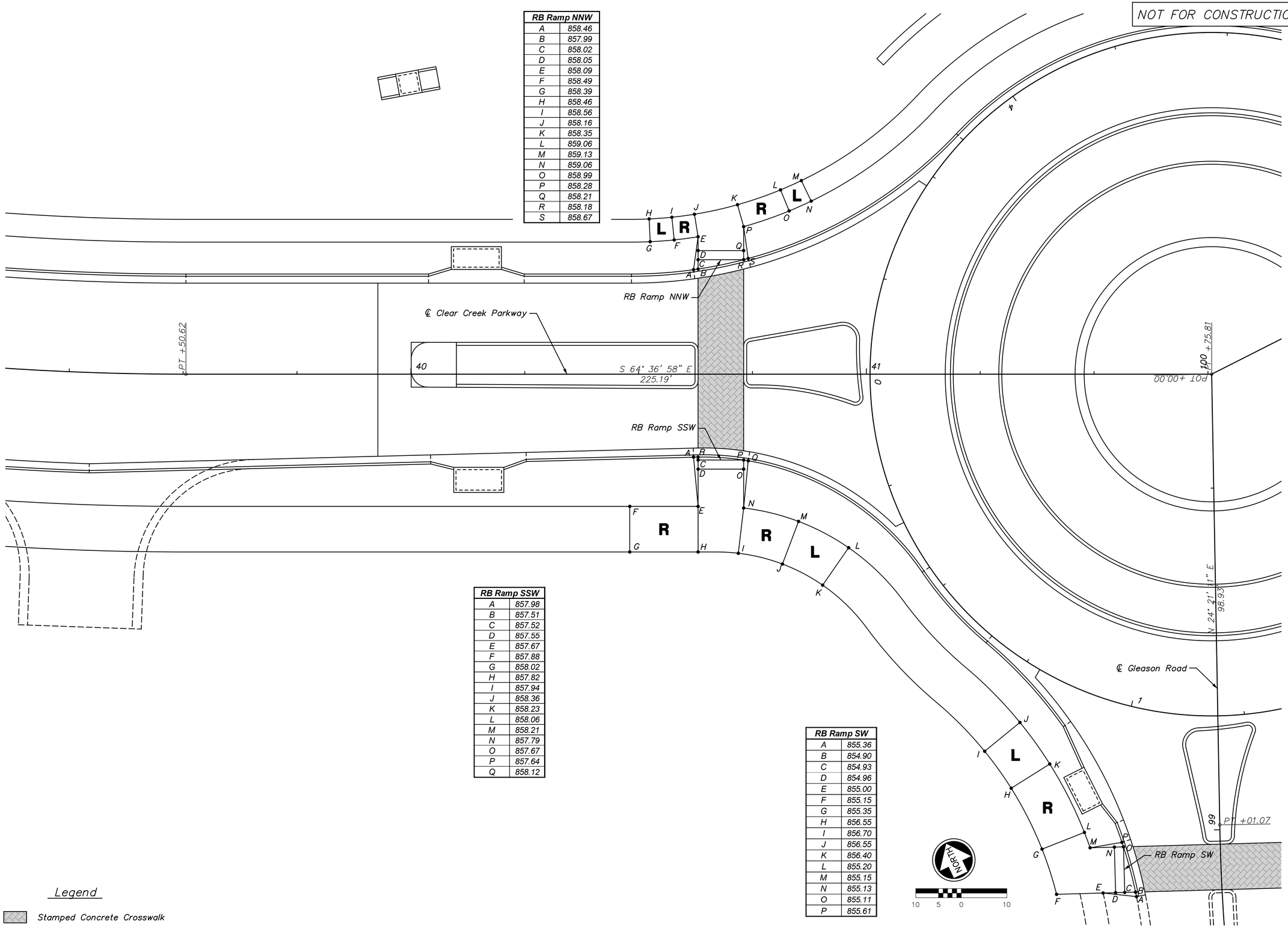

RB Ramp SSW	
A	857.98
B	857.51
C	857.52
D	857.55
E	857.67
F	857.88
G	858.02
H	857.82
I	857.94
J	858.36
K	858.23
L	858.06
M	858.21
N	857.79
O	857.67
P	857.64
Q	858.12

RB Ramp SW	
A	855.36
B	854.90
C	854.93
D	854.96
E	855.00
F	855.15
G	855.35
H	856.55
I	856.70
J	856.55
K	856.40
L	855.20
M	855.15
N	855.13
O	855.11
P	855.61

Legend

Stamped Concrete Crosswalk

REV.	DATE	REVISIONS	BY	APP'D
1				
2				
3				
4				
5				

Designed By: PRP
Drawn By: JCK/JAA
Checked By: HDL
Issue Date: SEPT. 2016

COPYRIGHT © -2016-SHAFER, KLINE & WARREN INC.

SHAFER, KLINE & WARREN
11250 Corporate Avenue
Lenexa, KS 66219-1392
913.888.7800 FAX: 913.888.7868
SURVEYING | ENGINEERING | CONSTRUCTION

CLEAR CREEK PARKWAY
CITY OF SHAWNEE, KANSAS

INTERSECTION DETAIL (3)

150561-010

LAYOUT: MODEL | BY: jadams | DATE: 20-SEP-2016 10:19:07 AM
L:\150561-010_Cad\Civil\Intersection Details\150561-010_ISD-03.dgn

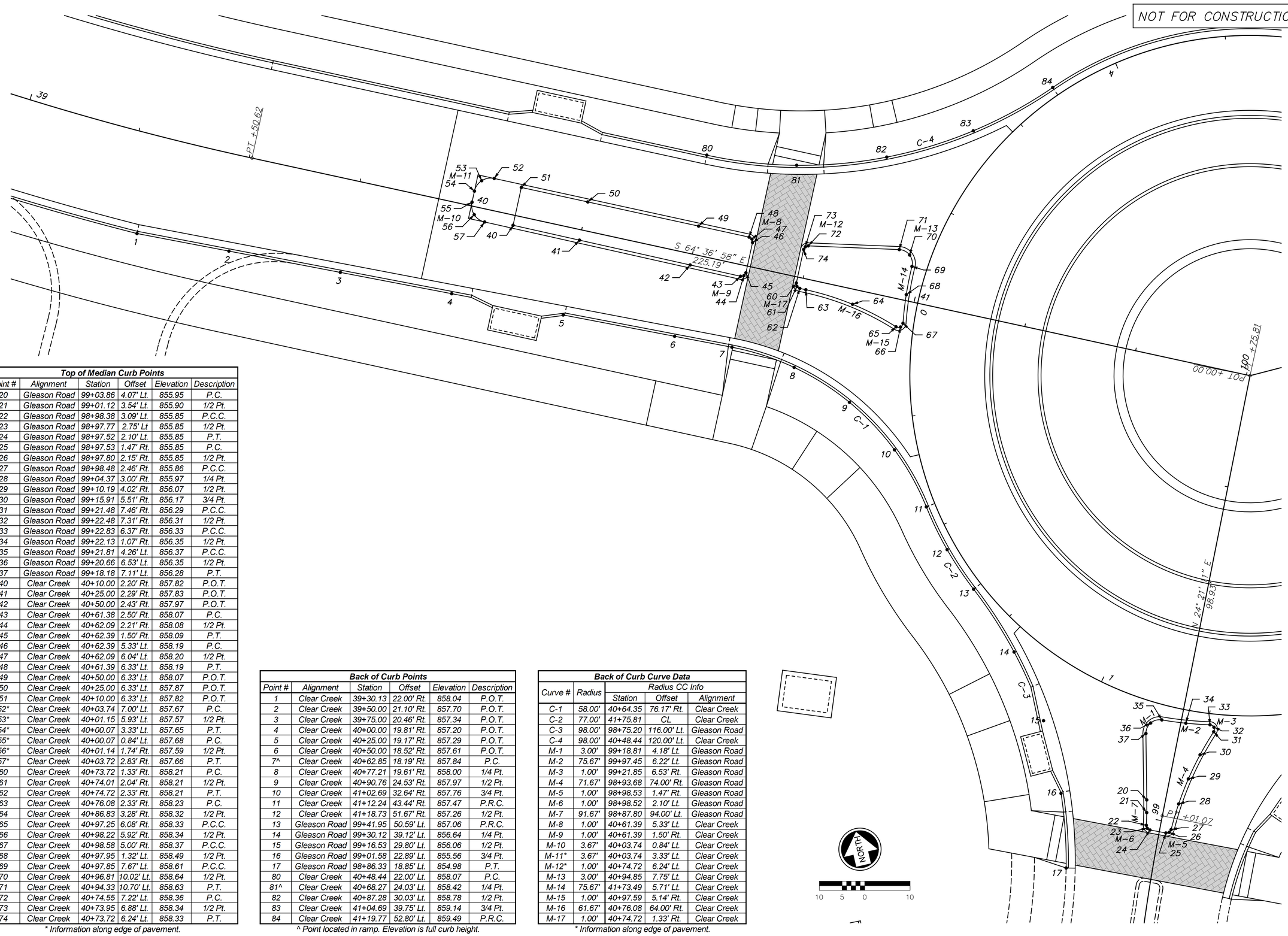

Top of Median Curb Points					
Point #	Alignment	Station	Offset	Elevation	Description
20	Gleason Road	99+03.86	4.07' Lt.	855.95	P.C.
21	Gleason Road	99+01.12	3.54' Lt.	855.90	1/2 Pt.
22	Gleason Road	98+98.38	3.09' Lt.	855.85	P.C.C.
23	Gleason Road	98+97.77	2.75' Lt	855.85	1/2 Pt.
24	Gleason Road	98+97.52	2.10' Lt.	855.85	P.T.
25	Gleason Road	98+97.53	1.47' Rt.	855.85	P.C.
26	Gleason Road	98+97.80	2.15' Rt.	855.85	1/2 Pt.
27	Gleason Road	98+98.48	2.46' Rt.	855.86	P.C.C.
28	Gleason Road	99+04.37	3.00' Rt.	855.97	1/4 Pt.
29	Gleason Road	99+10.19	4.02' Rt.	856.07	1/2 Pt.
30	Gleason Road	99+15.91	5.51' Rt.	856.17	3/4 Pt.
31	Gleason Road	99+21.48	7.46' Rt.	856.29	P.C.C.
32	Gleason Road	99+22.48	7.31' Rt.	856.31	1/2 Pt.
33	Gleason Road	99+22.83	6.37' Rt.	856.33	P.C.C.
34	Gleason Road	99+22.13	1.07' Rt.	856.35	1/2 Pt.
35	Gleason Road	99+21.81	4.26' Lt.	856.37	P.C.C.
36	Gleason Road	99+20.66	6.53' Lt.	856.35	1/2 Pt.
37	Gleason Road	99+18.18	7.11' Lt.	856.28	P.T.
40	Clear Creek	40+10.00	2.20' Rt.	857.82	P.O.T.
41	Clear Creek	40+25.00	2.29' Rt.	857.83	P.O.T.
42	Clear Creek	40+50.00	2.43' Rt.	857.97	P.O.T.
43	Clear Creek	40+61.38	2.50' Rt.	858.07	P.C.
44	Clear Creek	40+62.09	2.21' Rt.	858.08	1/2 Pt.
45	Clear Creek	40+62.39	1.50' Rt.	858.09	P.T.
46	Clear Creek	40+62.39	5.33' Lt.	858.19	P.C.
47	Clear Creek	40+62.09	6.04' Lt.	858.20	1/2 Pt.
48	Clear Creek	40+61.39	6.33' Lt.	858.19	P.T.
49	Clear Creek	40+50.00	6.33' Lt.	858.07	P.O.T.
50	Clear Creek	40+25.00	6.33' Lt.	857.87	P.O.T.
51	Clear Creek	40+10.00	6.33' Lt.	857.82	P.O.T.
52*	Clear Creek	40+03.74	7.00' Lt.	857.67	P.C.
53*	Clear Creek	40+01.15	5.93' Lt.	857.57	1/2 Pt.
54*	Clear Creek	40+00.07	3.33' Lt.	857.65	P.T.
55*	Clear Creek	40+00.07	0.84' Lt.	857.68	P.C.
56*	Clear Creek	40+01.14	1.74' Rt.	857.59	1/2 Pt.
57*	Clear Creek	40+03.72	2.83' Rt.	857.66	P.T.
60	Clear Creek	40+73.72	1.33' Rt.	858.21	P.C.
61	Clear Creek	40+74.01	2.04' Rt.	858.21	1/2 Pt.
62	Clear Creek	40+74.72	2.33' Rt.	858.21	P.T.
63	Clear Creek	40+76.08	2.33' Rt.	858.23	P.C.
64	Clear Creek	40+86.83	3.28' Rt.	858.32	1/2 Pt.
65	Clear Creek	40+97.25	6.08' Rt.	858.33	P.C.C.
66	Clear Creek	40+98.22	5.92' Rt.	858.34	1/2 Pt.
67	Clear Creek	40+98.58	5.00' Rt.	858.37	P.C.C.
68	Clear Creek	40+97.95	1.32' Lt.	858.49	1/2 Pt.
69	Clear Creek	40+97.85	7.67' Lt.	858.61	P.C.C.
70	Clear Creek	40+96.81	10.02' Lt.	858.64	1/2 Pt.
71	Clear Creek	40+94.33	10.70' Lt.	858.63	P.T.
72	Clear Creek	40+74.55	7.22' Lt.	858.36	P.C.
73	Clear Creek	40+73.95	6.88' Lt.	858.34	1/2 Pt.
74	Clear Creek	40+73.72	6.24' Lt.	858.33	P.T.

* Information along edge of pavement.

Back of Curb Points					
Point #	Alignment	Station	Offset	Elevation	Description
1	Clear Creek	39+30.13	22.00' Rt.	858.04	P.O.T.
2	Clear Creek	39+50.00	21.10' Rt.	857.70	P.O.T.
3	Clear Creek	39+75.00	20.46' Rt.	857.34	P.O.T.
4	Clear Creek	40+00.00	19.81' Rt.	857.20	P.O.T.
5	Clear Creek	40+25.00	19.17' Rt.	857.29	P.O.T.
6	Clear Creek	40+50.00	18.52' Rt.	857.61	P.O.T.
7^	Clear Creek	40+62.85	18.19' Rt.	857.84	P.C.
8	Clear Creek	40+77.21	19.61' Rt.	858.00	1/4 Pt.
9	Clear Creek	40+90.76	24.53' Rt.	857.97	1/2 Pt.
10	Clear Creek	41+02.69	32.64' Rt.	857.76	3/4 Pt.
11	Clear Creek	41+12.24	43.44' Rt.	857.47	P.R.C.
12	Clear Creek	41+18.73	51.67' Rt.	857.26	1/2 Pt.
13	Gleason Road	99+41.95	50.59' Lt.	857.06	P.R.C.
14	Gleason Road	99+30.12	39.12' Lt.	856.64	1/4 Pt.
15	Gleason Road	99+16.53	29.80' Lt.	856.06	1/2 Pt.
16	Gleason Road	99+01.58	22.89' Lt.	855.56	3/4 Pt.
17	Gleason Road	98+86.33	18.85' Lt.	854.98	P.T.
80	Clear Creek	40+48.44	22.00' Lt.	858.07	P.C.
81^	Clear Creek	40+68.27	24.03' Lt.	858.42	1/4 Pt.
82	Clear Creek	40+87.28	30.03' Lt.	858.78	1/2 Pt.
83	Clear Creek	41+04.69	39.75' Lt.	859.14	3/4 Pt.
84	Clear Creek	41+19.77	52.80' Lt.	859.49	P.R.C.

^ Point located in ramp. Elevation is full curb height.

Back of Curb Curve Data				
Curve #	Radius	Radius CC Info		
		Station	Offset	Alignment
C-1	58.00'	40+64.35	76.17' Rt.	Clear Creek
C-2	77.00'	41+75.81	CL	Clear Creek
C-3	98.00'	98+75.20	116.00' Lt.	Gleason Road
C-4	98.00'	40+48.44	120.00' Lt.	Clear Creek
M-1	3.00'	99+18.81	4.18' Lt.	Gleason Road
M-2	75.67'	99+97.45	6.22' Lt.	Gleason Road
M-3	1.00'	99+21.85	6.53' Rt.	Gleason Road
M-4	71.67'	98+93.68	74.00' Rt.	Gleason Road
M-5	1.00'	98+98.53	1.47' Rt.	Gleason Road
M-6	1.00'	98+98.52	2.10' Lt.	Gleason Road
M-7	91.67'	98+87.80	94.00' Lt.	Gleason Road
M-8	1.00'	40+61.39	5.33' Lt.	Clear Creek
M-9	1.00'	40+61.39	1.50' Rt.	Clear Creek
M-10	3.67'	40+03.74	0.84' Lt.	Clear Creek
M-11*	3.67'	40+03.74	3.33' Lt.	Clear Creek
M-12*	1.00'	40+74.72	6.24' Lt.	Clear Creek
M-13	3.00'	40+94.85	7.75' Lt.	Clear Creek
M-14	75.67'	41+73.49	5.71' Lt.	Clear Creek
M-15	1.00'	40+97.59	5.14' Rt.	Clear Creek
M-16	61.67'	40+76.08	64.00' Rt.	Clear Creek
M-17	1.00'	40+74.72	1.33' Rt.	Clear Creek

* Information along edge of pavement.

REV.	DATE	REVISIONS	BY	APP'D
1				
2				
3				
4				
5				

Designed By: PRP
Drawn By: JCK/JAA
Checked By: HDL
Issue Date: SEPT. 2016

COPYRIGHT © -2016-SHAFER, KLINE & WARREN INC.

SHAFER, KLINE & WARREN
11250 Corporate Avenue
Lenexa, KS 66219-1392
913.888.7800 FAX: 913.888.7868
SURVEYING | ENGINEERING | CONSTRUCTION

CLEAR CREEK PARKWAY
CITY OF SHAWNEE, KANSAS

INTERSECTION DETAIL (4)

150561-010

SHEET NO.
42 OF 182

LAYOUT: MODEL | BY: jadams | DATE: 20-SEP-2016 10:19:11 AM
L:\150561-010_Cad\Civil\Intersection Details\150561-010_ISD-04.dgn

NOT FOR CONSTRUCTION

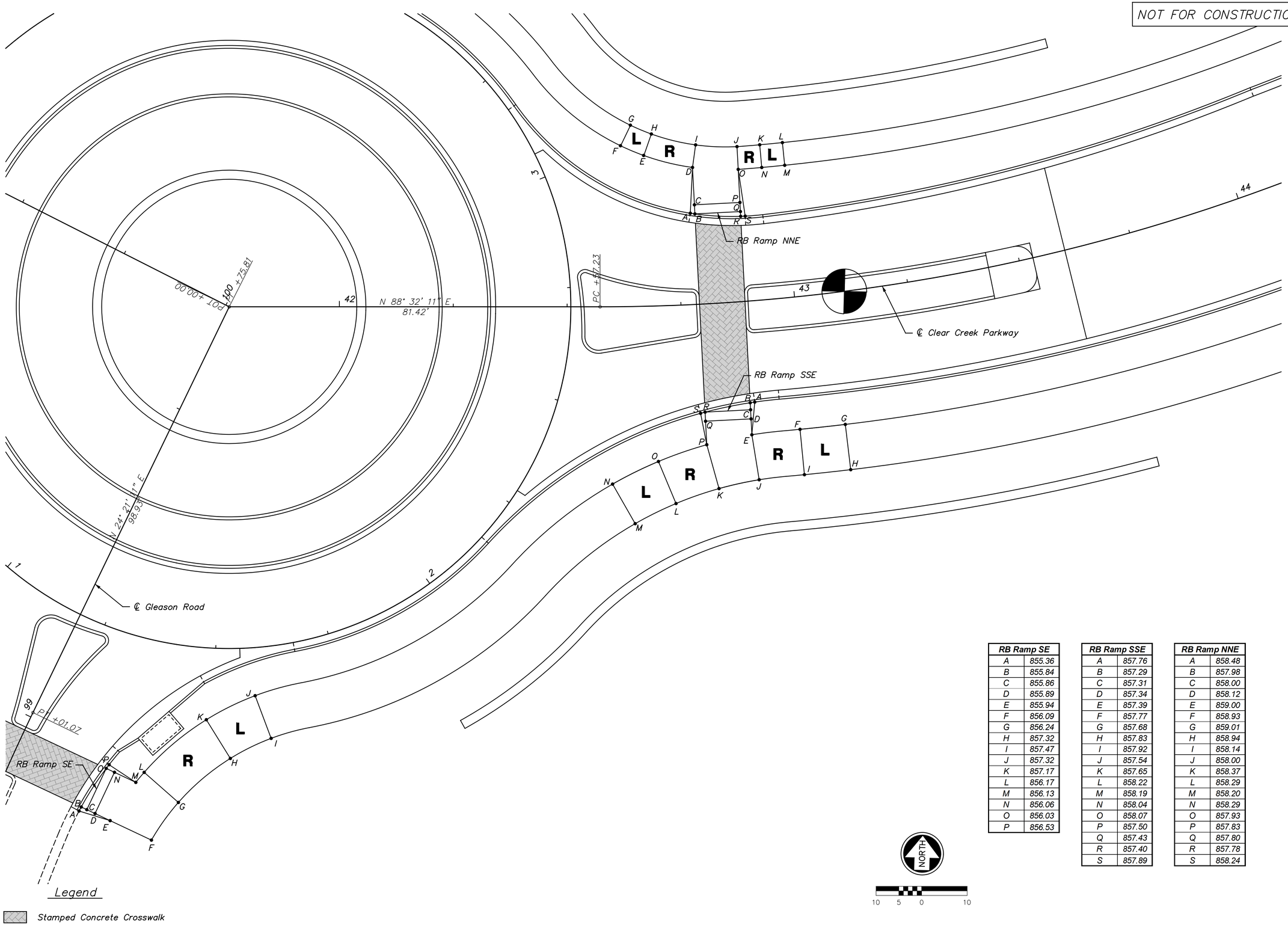

RB Ramp SE	
A	855.36
B	855.84
C	855.86
D	855.89
E	855.94
F	856.09
G	856.24
H	857.32
I	857.47
J	857.32
K	857.17
L	856.17
M	856.13
N	856.06
O	856.03
P	856.53

RB Ramp SSE	
A	857.76
B	857.29
C	857.31
D	857.34
E	857.39
F	857.77
G	857.68
H	857.83
I	857.92
J	857.54
K	857.65
L	858.22
M	858.19
N	858.04
O	858.07
P	857.50
Q	857.43
R	857.40
S	857.89

RB Ramp NNE	
A	858.48
B	857.98
C	858.00
D	858.12
E	859.00
F	858.93
G	859.01
H	858.94
I	858.14
J	858.00
K	858.37
L	858.29
M	858.20
N	858.29
O	857.93
P	857.83
Q	857.80
R	857.78
S	858.24

REV.	DATE	REVISIONS	BY	APP'D
1				
2				
3				
4				
5				

COPYRIGHT © -2016-SHAFER, KLINE & WARREN INC.

Designed By: PRP
Drawn By: JCK/JAA
Checked By: HDL
Issue Date: SEPT. 2016

SHAFER, KLINE & WARREN
11250 Corporate Avenue
Lenexa, KS 66219-1392
913.888.7800 FAX: 913.888.7868
SURVEYING | ENGINEERING | CONSTRUCTION

CLEAR CREEK PARKWAY
CITY OF SHAWNEE, KANSAS

INTERSECTION DETAIL (5)

150561-010

LAYOUT: MODEL | BY: jadams | DATE: 20-SEP-2016 10:19:19 AM
L:\150561-010_Cad\Civil\Intersection Details\150561-010_ISD-05.dgn

NOT FOR CONSTRUCTION

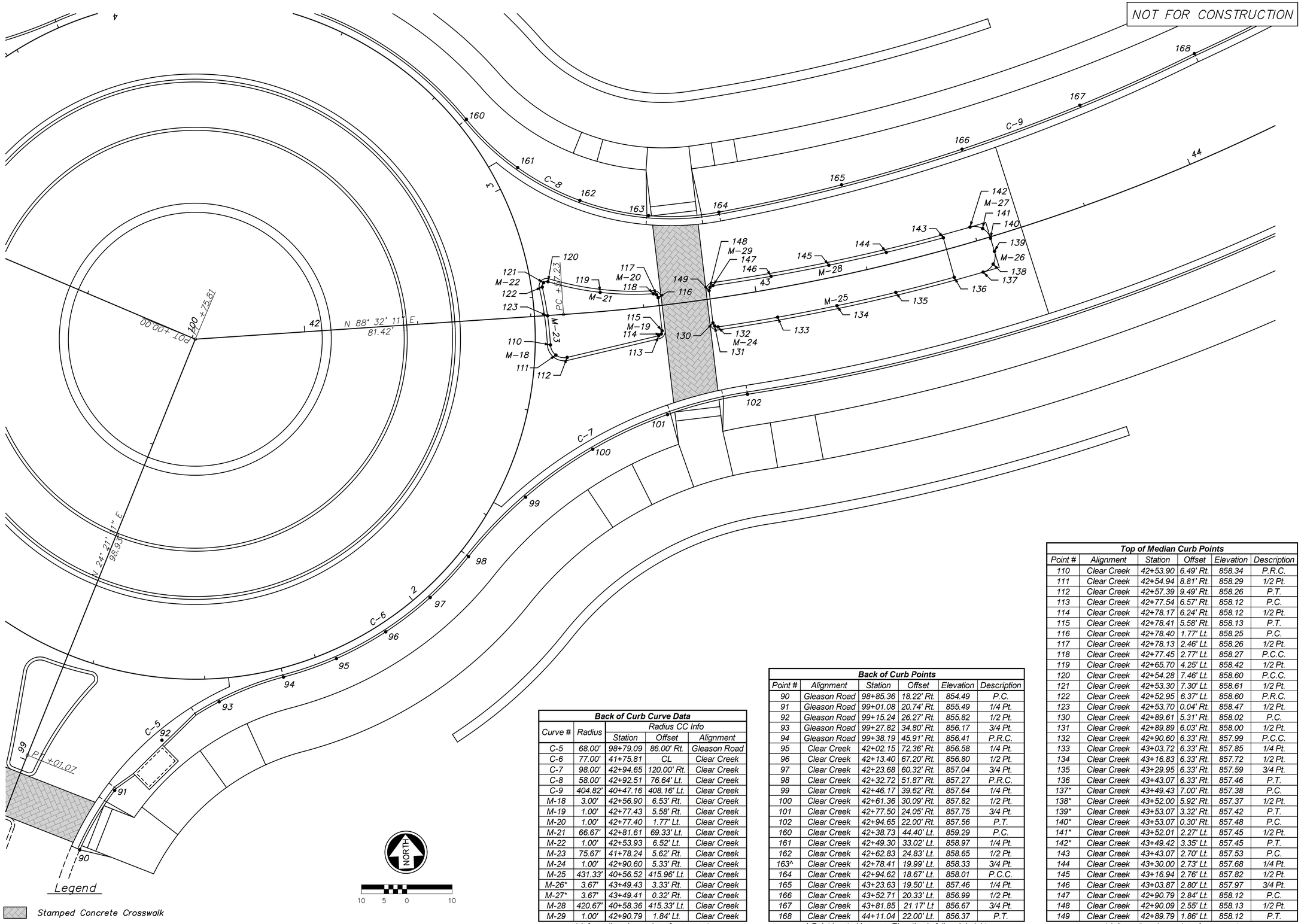

Back of Curb Curve Data				
Curve #	Radius	Radius CC Info		
		Station	Offset	Alignment
C-5	68.00'	98+79.09	86.00' Rt.	Gleason Road
C-6	77.00'	41+75.81	CL	Clear Creek
C-7	98.00'	42+94.65	120.00' Rt.	Clear Creek
C-8	58.00'	42+92.51	76.64' Lt.	Clear Creek
C-9	404.82'	40+47.16	408.16' Lt.	Clear Creek
M-18	3.00'	42+56.90	6.53' Rt.	Clear Creek
M-19	1.00'	42+77.43	5.58' Rt.	Clear Creek
M-20	1.00'	42+77.40	1.77' Lt.	Clear Creek
M-21	66.67'	42+81.61	69.33' Lt.	Clear Creek
M-22	1.00'	42+53.93	6.52' Lt.	Clear Creek
M-23	75.67'	41+78.24	5.62' Rt.	Clear Creek
M-24	1.00'	42+90.60	5.33' Rt.	Clear Creek
M-25	431.33'	40+56.52	415.96' Lt.	Clear Creek
M-26*	3.67'	43+49.43	3.33' Rt.	Clear Creek
M-27*	3.67'	43+49.41	0.32' Rt.	Clear Creek
M-28	420.67'	40+58.36	415.33' Lt.	Clear Creek
M-29	1.00'	42+90.79	1.84' Lt.	Clear Creek

* Information along edge of pavement.

Back of Curb Points					
Point #	Alignment	Station	Offset	Elevation	Description
90	Gleason Road	98+85.36	18.22' Rt.	854.49	P.C.
91	Gleason Road	99+01.08	20.74' Rt.	855.49	1/4 Pt.
92	Gleason Road	99+15.24	26.27' Rt.	855.82	1/2 Pt.
93	Gleason Road	99+27.82	34.80' Rt.	856.17	3/4 Pt.
94	Gleason Road	99+38.19	45.91' Rt.	856.41	P.R.C.
95	Clear Creek	42+02.15	72.36' Rt.	856.58	1/4 Pt.
96	Clear Creek	42+13.40	67.20' Rt.	856.80	1/2 Pt.
97	Clear Creek	42+23.68	60.32' Rt.	857.04	3/4 Pt.
98	Clear Creek	42+32.72	51.87' Rt.	857.27	P.R.C.
99	Clear Creek	42+46.17	39.62' Rt.	857.64	1/4 Pt.
100	Clear Creek	42+61.36	30.09' Rt.	857.82	1/2 Pt.
101	Clear Creek	42+77.50	24.05' Rt.	857.75	3/4 Pt.
102	Clear Creek	42+94.65	22.00' Rt.	857.56	P.T.
160	Clear Creek	42+38.73	44.40' Lt.	859.29	P.C.
161	Clear Creek	42+49.30	33.02' Lt.	858.97	1/4 Pt.
162	Clear Creek	42+62.83	24.83' Lt.	858.65	1/2 Pt.
163^	Clear Creek	42+78.41	19.99' Lt.	858.33	3/4 Pt.
164	Clear Creek	42+94.62	18.67' Lt.	858.01	P.C.C.
165	Clear Creek	43+23.63	19.50' Lt.	857.46	1/4 Pt.
166	Clear Creek	43+52.71	20.33' Lt.	856.99	1/2 Pt.
167	Clear Creek	43+81.85	21.17' Lt	856.67	3/4 Pt.
168	Clear Creek	44+11.04	22.00' Lt.	856.37	P.T.

^ Point located in ramp. Elevation is full curb height.

Top of Median Curb Points					
Point #	Alignment	Station	Offset	Elevation	Description
110	Clear Creek	42+53.90	6.49' Rt.	858.34	P.R.C.
111	Clear Creek	42+54.94	8.81' Rt.	858.29	1/2 Pt.
112	Clear Creek	42+57.39	9.49' Rt.	858.26	P.T.
113	Clear Creek	42+77.54	6.57' Rt.	858.12	P.C.
114	Clear Creek	42+78.17	6.24' Rt.	858.12	1/2 Pt.
115	Clear Creek	42+78.41	5.58' Rt.	858.13	P.T.
116	Clear Creek	42+78.40	1.77' Lt.	858.25	P.C.
117	Clear Creek	42+78.13	2.46' Lt.	858.26	1/2 Pt.
118	Clear Creek	42+77.45	2.77' Lt.	858.27	P.C.C.
119	Clear Creek	42+65.70	4.25' Lt.	858.42	1/2 Pt.
120	Clear Creek	42+54.28	7.46' Lt.	858.60	P.C.C.
121	Clear Creek	42+53.30	7.30' Lt.	858.61	1/2 Pt.
122	Clear Creek	42+52.95	6.37' Lt.	858.60	P.R.C.
123	Clear Creek	42+53.70	0.04' Rt.	858.47	1/2 Pt.
130	Clear Creek	42+89.61	5.31' Rt.	858.02	P.C.
131	Clear Creek	42+89.89	6.03' Rt.	858.00	1/2 Pt.
132	Clear Creek	42+90.60	6.33' Rt.	857.99	P.C.C.
133	Clear Creek	43+03.72	6.33' Rt.	857.85	1/4 Pt.
134	Clear Creek	43+16.83	6.33' Rt.	857.72	1/2 Pt.
135	Clear Creek	43+29.95	6.33' Rt.	857.59	3/4 Pt.
136	Clear Creek	43+43.07	6.33' Rt.	857.46	P.T.
137*	Clear Creek	43+49.43	7.00' Rt.	857.38	P.C.
138*	Clear Creek	43+52.00	5.92' Rt.	857.37	1/2 Pt.
139*	Clear Creek	43+53.07	3.32' Rt.	857.42	P.T.
140*	Clear Creek	43+53.07	0.30' Rt.	857.48	P.C.
141*	Clear Creek	43+52.01	2.27' Lt.	857.45	1/2 Pt.
142*	Clear Creek	43+49.42	3.35' Lt.	857.45	P.T.
143	Clear Creek	43+43.07	2.70' Lt.	857.53	P.C.
144	Clear Creek	43+30.00	2.73' Lt.	857.68	1/4 Pt.
145	Clear Creek	43+16.94	2.76' Lt.	857.82	1/2 Pt.
146	Clear Creek	43+03.87	2.80' Lt.	857.97	3/4 Pt.
147	Clear Creek	42+90.79	2.84' Lt.	858.12	P.C.
148	Clear Creek	42+90.09	2.55' Lt.	858.13	1/2 Pt.
149	Clear Creek	42+89.79	1.86' Lt.	858.12	P.T.

* Information along edge of pavement.

REV.	DATE	REVISIONS	BY	APP'D
1				
2				
3				
4				
5				

Designed By: PRP
Drawn By: JCK/JAA
Checked By: HDL
Issue Date: SEPT. 2016

COPYRIGHT © -2016-SHAFER, KLINE & WARREN INC.

SHAFER, KLINE & WARREN
11250 Corporate Avenue
Lenexa, KS 66219-1392
913.888.7800 FAX: 913.888.7868
SURVEYING | ENGINEERING | CONSTRUCTION

CLEAR CREEK PARKWAY
CITY OF SHAWNEE, KANSAS

INTERSECTION DETAIL (6)

150561-010

LAYOUT: MODEL | BY: jadams | DATE: 20-SEP-2016 10:19:22 AM
L:\150561-010_Cad\Civil\Intersection Details\150561-010_ISD-06.dgn

NOT FOR CONSTRUCTION

Curb 1	
PC	834.11*
1/4	834.70
1/2	834.27*
3/4	834.79
PT	834.35

* Elev. At Ramp Elev.
Elev. From Back of Curb

Hedge Ramp NW	
L	834.73
M	834.26
N	834.42
O	834.66
P	834.73
Q	834.80
R	834.73
S	834.49
T	834.33
U	834.28
V	834.76

Hedge Ramp N	
A	834.58
B	834.11
C	834.13
D	834.29
E	834.63
F	834.70
G	834.73
H	834.66
I	834.32
J	834.16
K	834.65

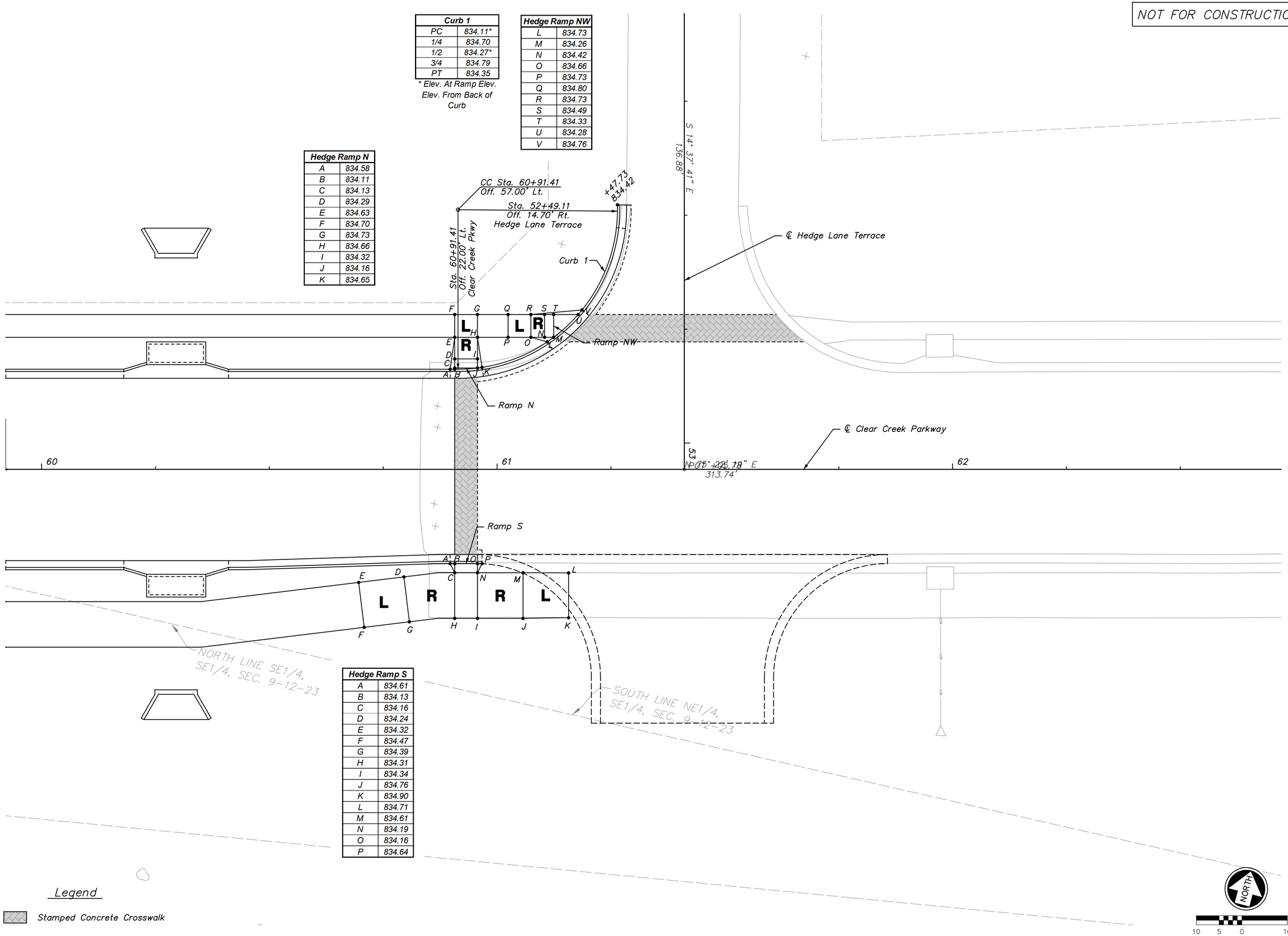

Hedge Ramp S	
A	834.61
B	834.13
C	834.16
D	834.24
E	834.32
F	834.47
G	834.39
H	834.31
I	834.34
J	834.76
K	834.90
L	834.71
M	834.61
N	834.19
O	834.16
P	834.64

Legend

Stamped Concrete Crosswalk

REV.	DATE	REVISIONS	BY	APP'D
1				
2				
3				
4				
5				

Designed By: PRP
Drawn By: JCK/JAA
Checked By: HDL
Issue Date: SEPT. 2016

COPYRIGHT © -2016-SHAFER, KLINE & WARREN INC.

SHAFER, KLINE & WARREN
11250 Corporate Avenue
Lenexa, KS 66219-1392
913.888.7800 FAX: 913.888.7868
SURVEYING | ENGINEERING | CONSTRUCTION

CLEAR CREEK PARKWAY
CITY OF SHAWNEE, KANSAS

INTERSECTION DETAIL (7)

150561-010

LAYOUT: MODEL | BY: jadams | DATE: 20-SEP-2016 10:19:34 AM
L:\150561-010_Cad\Civil\Intersection Details\150561-010_ISD-07.dgn

NOT FOR CONSTRUCTION

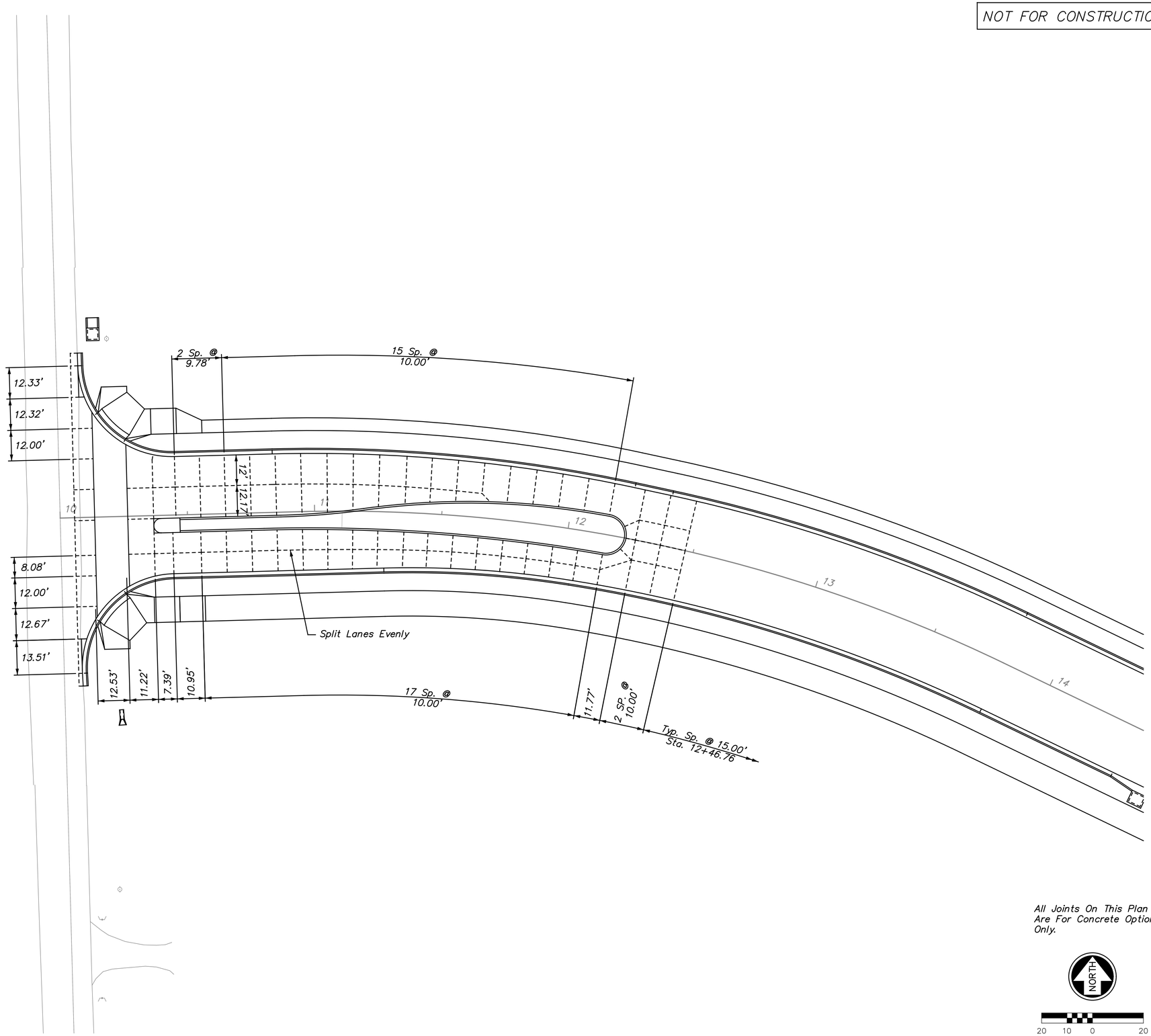

REV.	DATE	REVISIONS	BY	APP'D
1				
2				
3				
4				
5				

Designed By: PRP
Drawn By: JCK/JAA
Checked By: HDL
Issue Date: SEPT. 2016

COPYRIGHT © -2016-SHAFER, KLINE & WARREN INC.

SHAFER, KLINE & WARREN
11250 Corporate Avenue
Lenexa, KS 66219-1392
913.888.7800 FAX: 913.888.7868
SURVEYING | ENGINEERING | CONSTRUCTION

CLEAR CREEK PARKWAY
CITY OF SHAWNEE, KANSAS

JOINT LAYOUT (1)

150561-010

LAYOUT: MODEL | BY: jadams | DATE: 20-SEP-2016 10:19:38 AM
L:\150561-010_Cad\Civil\Joint Layouts\150561-010_JNT-LAY-01.dgn

NOT FOR CONSTRUCTION

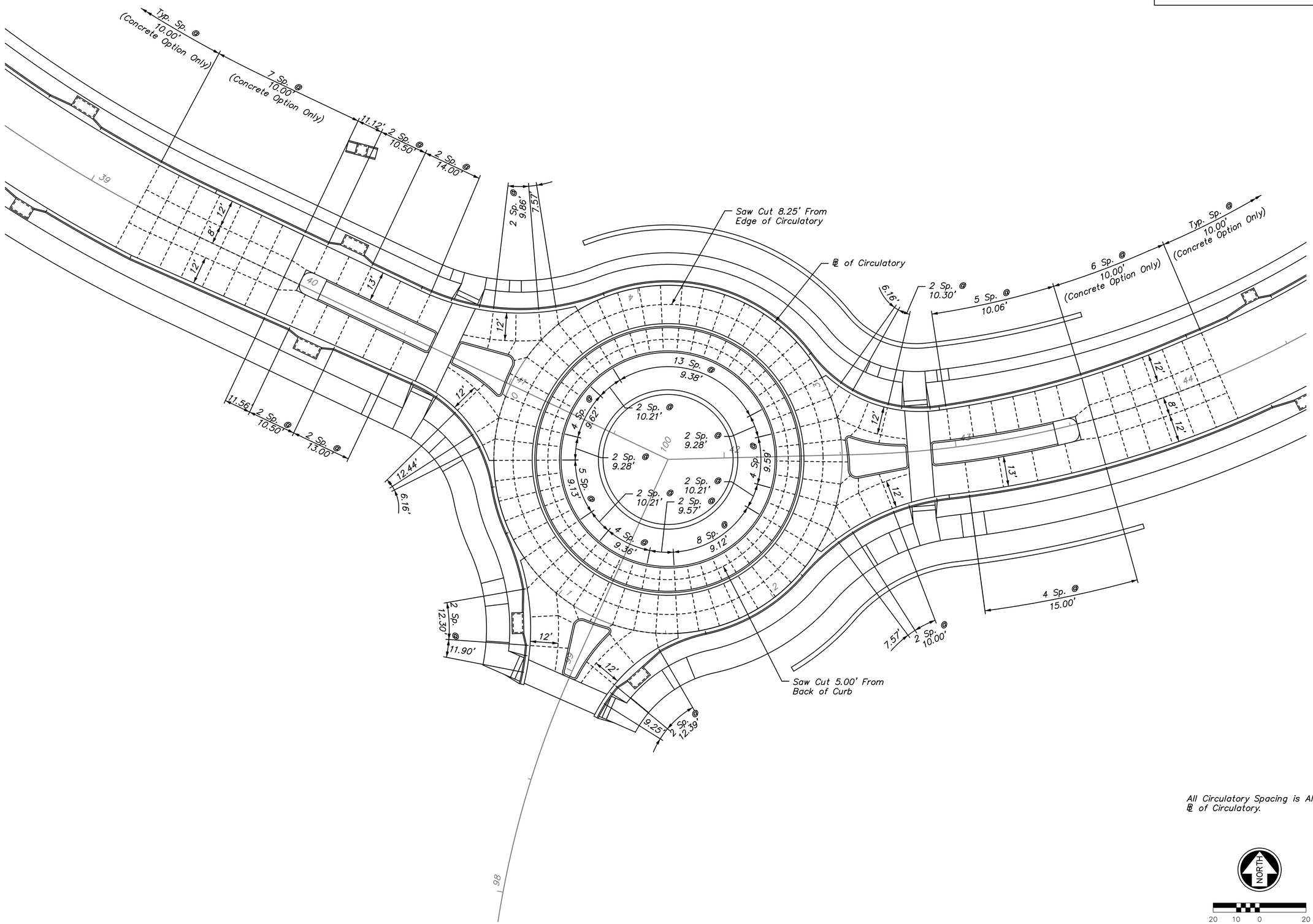

All Circulatory Spacing is Along ℄ of Circulatory.

NORTH

20 10 0 20

REV.	DATE	REVISIONS	BY	APP'D
1				
2				
3				
4				
5				

Designed By: PRP
Drawn By: JCK/JAA
Checked By: HDL
Issue Date: SEPT. 2016

COPYRIGHT © -2016-SHAFER, KLINE & WARREN INC.

SHAFER, KLINE & WARREN
11250 Corporate Avenue
Lenexa, KS 66219-1392
913.888.7800 FAX: 913.888.7868
SURVEYING | ENGINEERING | CONSTRUCTION

CLEAR CREEK PARKWAY
CITY OF SHAWNEE, KANSAS

JOINT LAYOUT (2)

150561-010

SHEET NO.
47 OF 182

LAYOUT: MODEL | BY: jadams | DATE: 20-SEP-2016 10:19:40 AM
L:\150561-010_Cad\Civil\Joint Layouts\150561-010_JNT-LAY-02.dgn

NOT FOR CONSTRUCTION

Total Deliniated Wetland Area = 0.47 Ac.

Total Disturbed Wetland Area = 0.29 Ac.

West Pond
Proposed Normal WSE = 885.00
Exist. Normal WSE = 884.30 (2-17-2016)
Exist. Normal WSE = 883.20 (8-8-2016)

Temp. Const. Esmt.

Shaded Area of Wetland Represents The Area Disturbed By Construction 0.16 Ac.

Const. Limit

Structure 304

Sta. 24+58.09, 33.50' Lt.
Const. Drainage Diaphragm
Top of Sand = 887.28
Bottom of Sand = 872.27
Install 72.66 LF of
4" PVC (Solid) Pipe
FL 872.30

Sta. 24+75.00, 33.50' Lt.
End Drainage Diaphragm
Top of Sand = 887.09
Bottom of Sand = 872.35
Install 18.04 LF of
4" PVC (Slotted) Pipe
FL 872.39

Vegetated TRM

POT +00.00

S 13°51'10.0" E
71.69

+71.69

Structure 303

Structure 302

Rip Rap

Sta. 22+25.00, 33.50' Lt.
Begin Drainage Diaphragm
Top of Sand = 890.39
Bottom of Sand = 875.39
Install 233.72 LF of
4" PVC (Slotted) Pipe
FL 875.42

PRC +58.09

S 24°53'04.4" E
28.63

Sta. 24+82.37, 38.50' Rt.
End Drainage Diaphragm
Top of Sand = 887.21
Bottom of Sand = 869.97
Install 10.91 LF of
4" PVC (Slotted) Pipe
FL 870.05

Rip Rap

Sta. 24+70.23, 38.50' Rt.
Const. Drainage Diaphragm
Top of Sand = 887.21
Bottom of Sand = 869.97
Install 134.00 LF of
4" PVC (Solid) Pipe
FL 870.00

Const. Limit

Shaded Area of Wetland Represents The Area Disturbed By Construction 0.13 Ac.

Sta. 24+42.79, 38.50' Rt.
Begin Drainage Diaphragm
Top of Sand = 887.21
Bottom of Sand = 869.97
Install 24.80 LF of
4" PVC (Slotted) Pipe
FL 870.12

Structure 301

Vegetated TRM

POT +01.32

FL 869.33

Temp. Const. Esmt.

Perm. Retaining Wall Esmt.

Shaded Area of Wetland Represents The Area Disturbed By Construction 0.00 Ac.

NORTH

20 10 0 20

Legend

Rip Rap

Vegetated Turf Reinforcement Mat

REV.	DATE	REVISIONS	BY	APP'D
1				
2				
3				
4				
5				

Designed By: PRP
Drawn By: JCK/JAA
Checked By: HDL
Issue Date: SEPT. 2016

COPYRIGHT © -2016-SHAFER, KLINE & WARREN INC.

SHAFER, KLINE & WARREN
11250 Corporate Avenue
Lenexa, KS 66219-1392
913.888.7800 FAX: 913.888.7868
SURVEYING | ENGINEERING | CONSTRUCTION

CLEAR CREEK PARKWAY
CITY OF SHAWNEE, KANSAS

GRADING PLAN (1)
WEST POND

150561-010

SHEET NO.
48 OF 182

LAYOUT: MODEL | BY: jadams | DATE: 20-SEP-2016 10:19:42 AM
L:\150561-010_Cad\Civil\Grading Plans\150561-010_GR-PL-01.dgn

NOT FOR CONSTRUCTION

Total Deliniated Wetland Area = 0.08 Ac.

Total Disturbed Wetland Area = 0.07 Ac.

East Pond
Proposed Normal WSE = 872.00
Exist. Normal WSE = 870.70 (2-17-2016)
Exist. Normal WSE = 869.30 (8-8-2016)

Temp. Const. Esmt.

Structure 404

POT +71.01

Sta. 29+74.71, 33.50' Lt.
Const. Drainage Diaphragm
Top of Sand = 874.82
Bottom of Sand = 855.45
Install 72.26 LF of
4" PVC (Solid) Pipe
FL 855.48

Perm. Drainage Esmt.

Shaded Area of Wetland Represents The Area Disturbed By Construction 0.06 Ac.

Shaded Area of Wetland Represents The Area Disturbed By Construction 0.01 Ac.

Sta. 28+25.00, 33.50' Lt.
Begin Drainage Diaphragm
Top of Sand = 876.83
Bottom of Sand = 861.83
Install 149.71 LF of
4" PVC (Slotted) Pipe
FL 861.86

Sta. 31+00.00, 33.50' Lt.
End Drainage Diaphragm
Top of Sand = 876.55
Bottom of Sand = 861.55
Install 127.66 LF of
4" PVC (Slotted) Pipe
FL 861.58

Vegetated TRM

S 25° 15' 36" W
181.99'

Structure 403

S 64° 45' 49" E
264.16'

Structure 402

PT +65.16

PC +79.37

Temp. Const. Esmt.

Relocated Streambed
Length = 240 Ft.

Sta. 29+44.88, 38.50' Rt.
Begin Drainage Diaphragm
Top of Sand = 874.89
Bottom of Sand = 852.53
Install 32.22 LF of
4" PVC (Slotted) Pipe
FL 852.72

S 13° 10' 47" W
107.74'

Structure 401

Rip Rap

Perm. Drainage Esmt.

POT +60.74

FL 852.11

Vegetated TRM

Sta. 29+77.11, 38.50' Rt.
Const. Drainage Diaphragm
Top of Sand = 874.89
Bottom of Sand = 852.53
Install 90.00 LF of
4" PVC (Solid) Pipe
FL 852.56

Sta. 29+94.84, 38.50' Rt.
End Drainage Diaphragm
Top of Sand = 874.89
Bottom of Sand = 852.53
Install 17.74 LF of
4" PVC (Slotted) Pipe
FL 852.65

NORTH

20 10 0 20

Legend

Rip Rap

Vegetated Turf Reinforcement Mat

REV.	DATE	REVISIONS	BY	APP'D
1				
2				
3				
4				
5				

Designed By: PRP
Drawn By: JCK/JAA
Checked By: HDL
Issue Date: SEPT. 2016

COPYRIGHT © -2016-SHAFER, KLINE & WARREN INC.

SHAFER, KLINE & WARREN
11250 Corporate Avenue
Lenexa, KS 66219-1392
913.888.7800 FAX: 913.888.7868
SURVEYING | ENGINEERING | CONSTRUCTION

CLEAR CREEK PARKWAY
CITY OF SHAWNEE, KANSAS

GRADING PLAN (2)
EAST POND

150561-010

SHEET NO.
49 OF 182

LAYOUT: MODEL | BY: jadams | DATE: 20-SEP-2016 10:19:50 AM
L:\150561-010_Cad\Civil\Grading Plans\150561-010_GR-PL-02.dgn

NOT FOR CONSTRUCTION

Perm. Drainage Esmt.
Vegetated TRM
Perm. Drainage Esmt.
Vegetated TRM
Const. Limit
Structure 606
Structure 603
Temp. Const. Esmt.
Rip Rap
Vegetated TRM
Perm. Retaining Wall Esmt.
Perm. Drainage Esmt.
Temp. Const. Esmt.
Structure 602
Relocated Streambed
Length = 432 Ft.
Structure 601
Rip Rap
Perm. Retaining Wall Esmt.
Temp. Const. Esmt.
Const. Limit

Legend

Rip Rap
Vegetated Turf Reinforcement Mat

NORTH

20 10 0 20

REV.	DATE	REVISIONS	BY	APP'D
1				
2				
3				
4				
5				

Designed By: PRP
Drawn By: JCK/JAA
Checked By: HDL
Issue Date: SEPT. 2016

COPYRIGHT © -2016-SHAFER, KLINE & WARREN INC.

SHAFER, KLINE & WARREN
11250 Corporate Avenue
Lenexa, KS 66219-1392
913.888.7800 FAX: 913.888.7868
SURVEYING | ENGINEERING | CONSTRUCTION

CLEAR CREEK PARKWAY
CITY OF SHAWNEE, KANSAS

GRADING PLAN (3)
ROUNDABOUT

150561-010

LAYOUT: MODEL BY: jadams DATE: 20-SEP-2016 10:19:54 AM
L:\150561-010_Cad\Civil\Grading Plans\150561-010_GR-PL-03.dgn

NOT FOR CONSTRUCTION

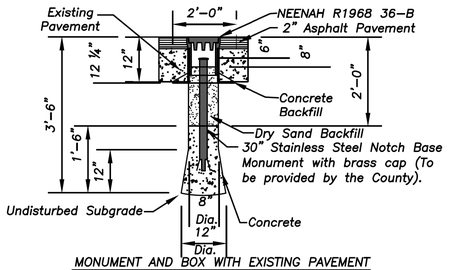

MONUMENT AND BOX WITH EXISTING PAVEMENT

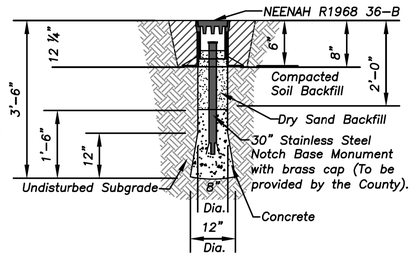

MONUMENT AND BOX WITH COMPACTED BACKFILL

Monument Notes:

1. All survey work related to preserving location and establishment of new monument shall be performed under supervision of the construction surveyor, who shall be a land surveyor licensed in the State of Kansas.
2. Construction surveyor is responsible for filing Notice of Endangerment Activity Report and Completion of Endangerment Activity Report with Kansas State Historical Society, Johnson County Engineer, and the City. Reports shall have at least 5 reference ties to points unlikely to be disturbed by construction, or 3 ties & State Plane Coordinates.
3. Stainless steel monument with brass cap will be furnished to the construction surveyor by Johnson County Public Works upon satisfactory review of Notice of Endangerment Activity Report.
4. Monument box and other material shall be furnished by Contractor.
5. Brass cap is not pre punched and after the monument is set in concrete the construction surveyor shall punch brass cap at exact location. No other information shall be punched on the cap by the construction surveyor.

Government Corners to be preserved per this monument detail:

Corner	Section	Township	Range

LAND CORNER MONUMENT BOX

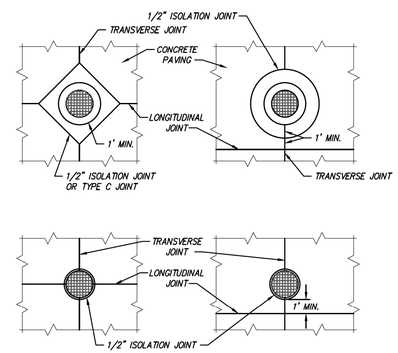

CONCRETE JOINT DETAILS AT MANHOLES

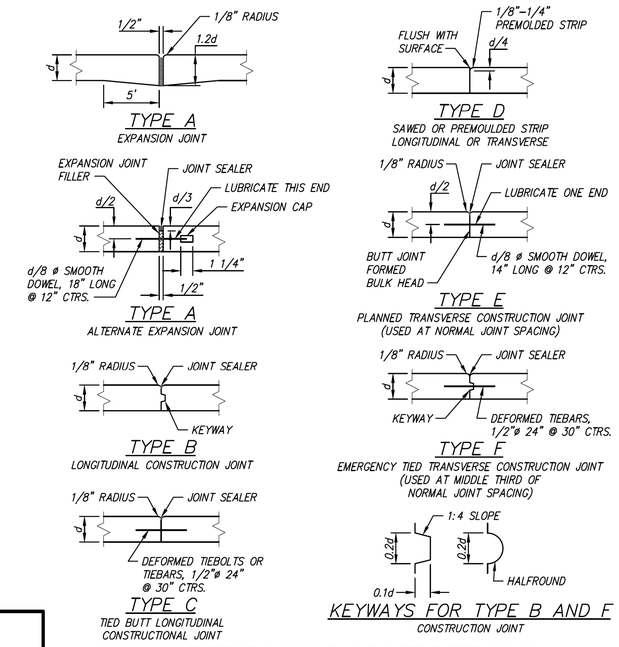

CONCRETE PAVING JOINT DETAILS

PERSPECTIVE VIEW

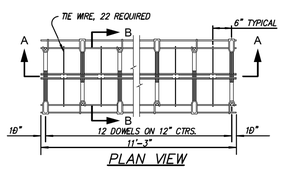

PLAN VIEW

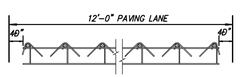

SEC. A-A

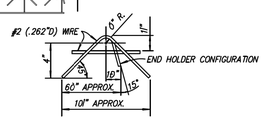

NOTES:

WIRE SIZES SHOWN ARE MINIMUM REQUIRED.

SIDES HELD TOGETHER WITH TIE WIRE, ALLOWING QUICK SEPARATION OF SIDES & INSERTION OF EXPANSION MATERIAL, PROVIDED IN FIELD.

ONE LENGTH OF PREFORMED EXPANSION JOINT FILLER (TYPE B), OR OTHER APPROVED MATERIAL, CUT TO FIT CROWN AND SUBGRADE SHALL BE USED FOR EACH LANE OF PAVEMENT AS EXPANSION JOINT FILLER.

A STRING LINE SHALL BE STRETCHED BETWEEN THE PAVEMENT FORMS ALONG THE CENTER LINE OF THE JOINT.

EACH DOWEL BAR SHALL BE COATED WITH AN EPOXY COATING WITH THE AVERAGE FILM THICKNESS OF NOT LESS THAN 10 MILS ON ANY BAR, WITH INDIVIDUAL DETERMINATIONS WITHIN A TOLERANCE OF + 3 MILS OF THE AVERAGE. THE COATING NEED NOT BE APPLIED TO THE END FACES OF THE BARS AND WILL NOT BE REQUIRED WITH– IN 2 INCHES OF THE END WHICH WILL BE FIXED IN THE SUPPORTING BASKET BY WELD– ING. THE COATING MATERIAL SHALL BE A POWDERED EPOXY RESIN APPROVED BY THE ENGINEER OF MATERIALS AND SHALL BE UNIFORMLY APPLIED ACCORDING TO ACCEPTED PRACTICES AND THE RESIN MANUFACTURER'S RECOMMENDATIONS.

IN ORDER TO IDENTIFY THE LOCATION OF THE BOND BREAKER APPLICATION, THE WORKING END OF DOWEL AND THE SUPPORTING LEG SHALL RECEIVE A LIGHT APPLICATION OF RED PAINT AT THE PLACE OF FABRICATION. THE BOND BREAKER TO BE APPLIED IN THE FIELD PRIOR TO CONCRETE PLACEMENT SHALL CONSIST OF COATING APPROXIMATELY THREE FIFTHS OF THE LENGTH OF EACH DOWEL BAR WITH HARD GREASE AT THE WORKING END IDENTIFIED BY THE RED PAINT.

THE CUTTING TO LENGTH OF THE DOWEL BARS SHALL BE DONE IN SUCH A MANNER TO RESULT IN NO APPRECIABLE DEFORMATION OF THE ENDS.

THE ENTIRE JOINT ASSEMBLY SHALL BE CAREFULLY LEVELED UP SO THAT THE DOWELS ARE PARALLEL TO THE SLAB SURFACE AND FREE TO SLIDE IN THE DOWEL HOLDERS. ANY GREASE SCRAPED OFF THE DOWELS IN ASSEMBLING THE JOINT SHALL BE REPLACED. ANY EXCESS GREASE ON THE DOWEL HOLDERS SHALL BE REMOVED.

AFTER THE COMPLETE EXPANSION JOINT IS ASSEMBLED, IT SHALL BE CHECKED TO BE CERTAIN THAT THE VERTICAL PLANE OF THE JOINT WILL BE PERPENDICULAR TO THE FINISHED SURFACE OF THE SLAB AND AT A RIGHT ANGLE WITH THE CENTER LINE OF THE SLAB. THE DOWELS SHALL BE CHECKED TO BE CERTAIN THAT THEY ARE LEVEL AND WILL REMAIN IN A POSITION PARALLEL WITH THE FINISHED SURFACE OF THE SLAB.

CONCRETE SHALL BE PLACED OVER AND ADJACENT TO THE JOINT IN ACCORDANCE WITH THE REQUIREMENTS OF THE SPECIFICATIONS.

TO FINISH THE JOINT AFTER COMPLETION OF MACHINE FINISHING, FLOATING AND STRAIGHT EDGING OF THE SURFACE, THE CONCRETE OVER THE FILLER SHALL BE CAREFULLY REMOVED AND THE JOINT EDGED WITH AN EDGER OF THE PROPER SIZE.

EXPANSION JOINT MATERIAL IS TO BE INSTALLED IN THE FIELD.

OTHER APPROVED DESIGNS MAY BE USED IN LIEU OF THE TYPE SHOWN.

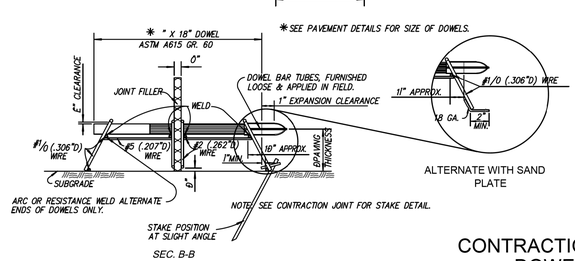

* SEE PAVEMENT DETAILS FOR SIZE OF DOWELS.

ALTERNATE WITH SAND PLATE

EXPANSION JOINT

CONTRACTION & EXPANSION JT. DOWEL ASSEMBLIES

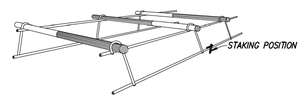

PERSPECTIVE VIEW

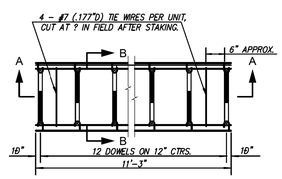

PLAN VIEW

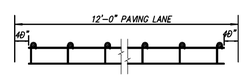

SEC. A-A

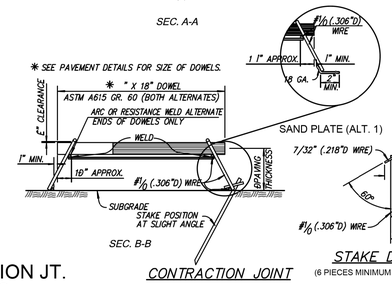

CONTRACTION JOINT

STAKE DETAIL
(6 PIECES MINIMUM REQUIRED)

GENERAL NOTES:

DOWEL BAR INSERTION MAY BE BY MECHANICAL DOWEL PLACERS REGARDLESS OF THE JOINT SPACING.

EACH DOWEL BAR SHALL BE COATED WITH AN EPOXY COATING THAT MEETS CURRENT KANSAS DEPARTMENT OF TRANSPORTATION STANDARD SPECIFICATIONS. THE COATING MATERIAL SHALL BE A POWDERED EPOXY RESIN APPROVED BY THE KANSAS DEPARTMENT OF TRANSPORTATION AND SHALL BE UNIFORMLY APPLIED ACCORDING TO ACCEPTED PRACTICES AND THE RESIN MANUFACTURER'S RECOMMENDATIONS. FOR ALT. 1 THE COATING NEED NOT BE APPLIED TO THE END FACES OF THE BARS AND WILL NOT BE REQUIRED WITHIN 50 MM OF THE END WHICH WILL BE FIXED IN THE SUPPORTING BASKET BY WELDING.

THE CUTTING TO LENGTH OF THE DOWEL BARS SHALL BE DONE IN SUCH A MANNER TO RESULT IN NO APPRECIABLE DEFORMATION OF THE ENDS.

ALT. 1 (BASKETS)

WIRE SIZES SHOWN ARE MINIMUM REQUIRED.

BASKET TO BE STAKED TO SUB–GRADE, AS SHOWN. RAMSET OR SIMILAR TYPE FASTENER WITH CLIP TO BE USED WHEN SUBGRADE CONDITION REQUIRES IT.

A STRING LINE SHALL BE STRETCHED BETWEEN THE PAVEMENT FORMS ALONG THE CENTER LINE OF THE JOINT. THE POSITION OF THE JOINT SHALL BE CAREFULLY MARKED SO THAT THE SAW CUT WILL COINCIDE WITH THE CENTER LINE OF THE JOINT.

IN ORDER TO IDENTIFY THE LOCATION OF THE BOND BREAKER APPLICATION, THE WORKING END OF DOWEL AND THE SUPPORTING LEG SHALL RECEIVE A LIGHT APPLICATION OF RED PAINT AT THE PLACE OF FABRICATION. THE BOND BREAKER TO BE APPLIED IN THE FIELD PRIOR TO CONCRETE PLACEMENT SHALL CONSIST OF COATING APPROXIMATELY THREE–FIFTHS OF THE LENGTH OF EACH DOWEL BAR WITH HARD GREASE AT THE WORKING END IDENTIFIED BY THE RED PAINT.

THE ENTIRE JOINT ASSEMBLY SHALL BE CAREFULLY LEVELED SO THAT THE DOWELS ARE PARALLEL TO THE SLAB SURFACE AND FREE TO SLIDE IN THE DOWEL HOLDERS. ANY COATING SCRAPED OFF THE DOWELS IN ASSEMBLING THE JOINT SHALL BE REPLACED.

AFTER THE COMPLETE CONTRACTION JOINT IS ASSEMBLED, IT SHALL BE CHECKED TO BE CERTAIN THAT THE VERTICAL PLANE OF THE JOINT WILL BE PERPENDICULAR TO THE FINISHED SURFACE OF THE SLAB AND AT A RIGHT ANGLE WITH THE CENTER LINE OF THE SLAB UNLESS SHOWN OTHERWISE ON THE PLANS. THE DOWELS SHALL BE CHECKED TO BE CERTAIN THAT THEY ARE LEVEL AND WILL REMAIN IN A POSITION PARALLEL WITH THE FINISHED SURFACE OF THE SLAB.

CONCRETE SHALL BE PLACED OVER AND ADJACENT TO THE JOINT IN ACCORDANCE WITH THE REQUIREMENTS OF THE SPECIFICATIONS.

OTHER APPROVED DESIGNS MAY BE USED IN LIEU OF THE TYPE SHOWN.

ALT. 2 (MECHANICAL PLACEMENT)

JOINT SPACING SHALL BE NORMAL TO CENTERLINE.

THE PAVEMENT SHALL BE PLACED AND CONSOLIDATED TO FULL DEPTH PRIOR TO INSERTION OF THE DOWEL BARS.

THE DOWEL BARS SHALL BE COATED WITH A BOND BREAKING AGENT PRIOR TO IN– SERTION INTO THE PLASTIC CONCRETE.

THE DOWEL BARS SHALL BE INSERTED INTO THE PLASTIC CONCRETE AHEAD OF THE FINISHING BEAM OR SCREED.

THE INSTALLING DEVICE SHALL CONSOLIDATE THE CONCRETE AROUND THE DOWEL BARS SUCH THAT NO VOIDS EXIST, WITHOUT THE SUPPLEMENTAL USE OF HAND HELD VIBRATORS.

THE DOWEL BARS SHALL BE LOCATED WITHIN ONE INCH OF THE PLANNED TRANSVERSE LOCATION AND WITHIN THE RANGE OF DEPTH OF D 0.1 D MEASURED / 2 – FROM MID DEPTH AND MID LENGTH OF THE BAR WHERE D REPRESENTS THE PAVEMENT THICKNESS.

THE DOWEL BARS SHALL BE LOCATED WITHIN TWO INCHES OF THE PLANNED LONGITUDINAL LOCATION.

THE DOWEL BARS SHALL BE PARALLEL TO THE PAVEMENT SURFACE AND CENTERLINE WITHIN A TOLERANCE OF ONE HALF INCH IN 18 INCHES IN BOTH THE VERTICAL AND HORIZONTAL DIRECTION.

THE FORWARD MOVEMENT OF THE FINISHING BEAM OR SCREED SHALL NOT BE INTERRUPTED BY THE INSERTING OF THE DOWEL BARS.

A POSITIVE METHOD OF MARKING THE LOCATIONS OF THE TRANSVERSE JOINTS SHALL BE PROVIDED.

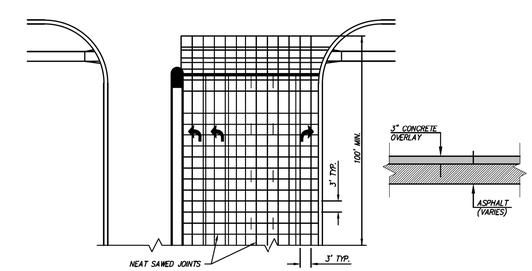

NOTES:

1. CONCRETE USED IN THIS WORK SHALL BE KCMMBSK AS APPROVED BY THE KANSAS CITY METROPOLITAN MATERIALS BOARD, AND SHALL MEET THE REQUIREMENTS OF THE SHAWNEE TECHNICAL SPECIFICATIONS.
2. ALL WORK SHALL MEET THE REQUIREMENTS OF THE SHAWNEE TECHNICAL SPECIFICATIONS.

CONCRETE INLAY

Date	Revision	By	Appr.
3–1–14	SHAWNEE DESIGN & CONSTRUCTION MANUAL REVISIONS	MRS	PJL
8–21–12	REVISED TO MATCH CONSTRUCTION SPECIFICATION REVISIONS	MRS	PJL

CONCRETE PAVEMENT DETAILS / MONUMENT BOX

DEVELOPMENT SERVICES

Good Starts Here. SHAWNEE KANSAS

DATE:	08–27–2007	3210
DRAWN BY:	MRS	
CHECKED BY:	PJL	SHEET 1 OF 1

REV.	DATE	REVISIONS	BY	APP'D
1				
2				
3				
4				
5				

Designed By: PRP
Drawn By: JCK/JAA
Checked By: HDL
Issue Date: SEPT. 2016

COPYRIGHT © –2016–SHAFER, KLINE & WARREN INC.

SHAFER, KLINE & WARREN
11250 Corporate Avenue
Lenexa, KS 66219-1392
913.888.7800 FAX: 913.888.7868
SURVEYING | ENGINEERING | CONSTRUCTION

CLEAR CREEK PARKWAY
CITY OF SHAWNEE, KANSAS

ROADWAY DETAILS (1)

150561–010

SHEET NO.
51 OF 182

LAYOUT: MODEL | BY: jadams | DATE: 20–SEP–2016 10:19:57 AM
L:\150561-010_Cad\Civil\Roadway Details\150561-010_ROAD-DET-01.dgn

NOT FOR CONSTRUCTION

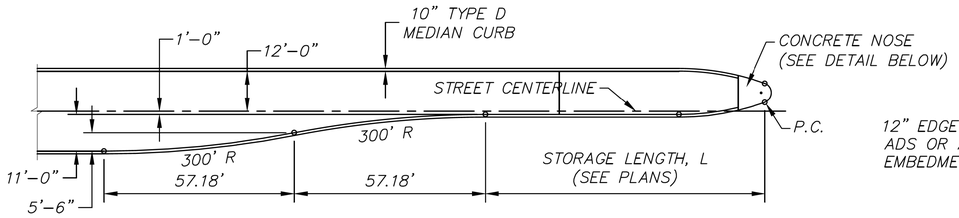

TYPICAL LEFT TURN LANE

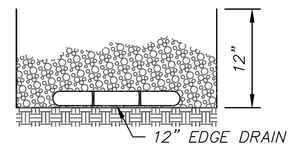

EMBEDMENT DETAIL

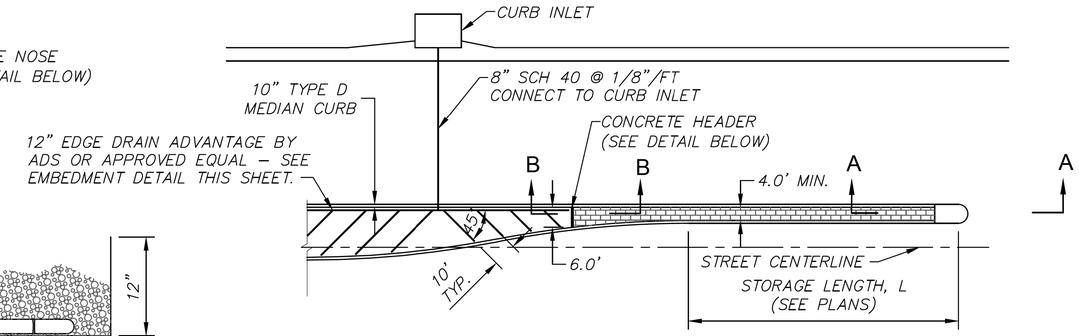

TYPICAL LEFT TURN LANE

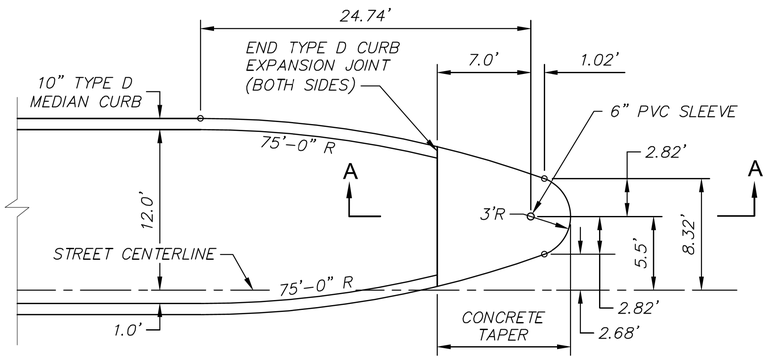

CONCRETE NOSE DETAIL

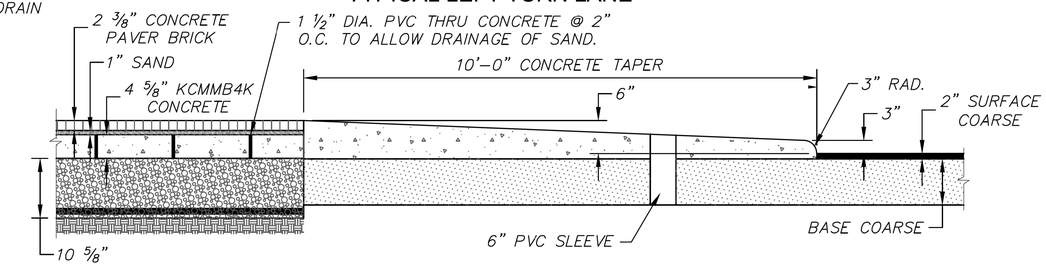

SECTION A-A

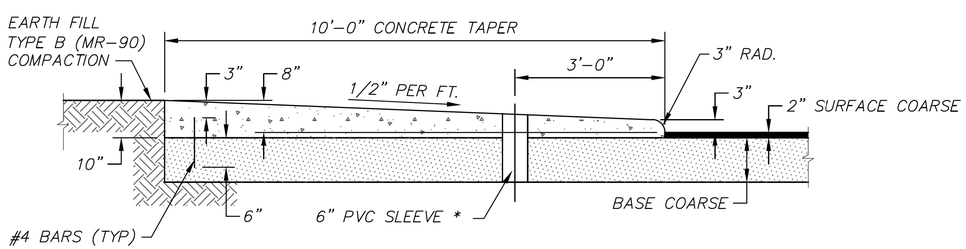

SECTION A-A

* PVC SLEEVE SHALL EXTEND AT LEAST 3' BELOW THE TOP OF THE MEDIAN NOSE AND SHALL BE FILLED WITH SAND.

MEDIAN NOSE DETAIL
LEFT TURN BAY ISLANDS

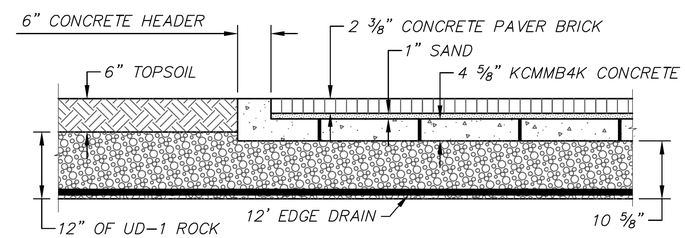

SECTION B-B
PAVER BRICK AND PAVER BRICK HEADER DETAIL

PAVING BRICK NOTES:

1. INTERLOCKING CONCRETE PAVING BRICKS SHALL MEET THE REQUIREMENTS OF ASTM C936.
2. PAVING BRICK SHALL BE RED, COBBLESTONE STYLE CONSISTING OF:

   FULL STONES (4 5/8"X7"X2 3/8");
   TWO THIRDS STONES (4 5/8"X4 5/8"X2 3/8");
   ONE THIRD STONES (4 5/8"X2 5/16"X2 3/8").
   THE MIX OF STONE SIZES SHALL BE APPROXIMATELY 28% FULL SIZE, 57% TWO THIRDS SIZE AND 15% ONE THIRD SIZE.
3. PAVING BRICK SHALL BE INSTALLED IN ACCORDANCE WITH MANUFACTURER'S RECOMMENDATIONS.

PAVING BRICK DETAIL
LEFT TURN BAY ISLANDS

Date	Revision	By	Appr
3-1-14	SHAWNEE DESIGN & CONSTRUCTION MANUAL REVISIONS	MRS	PJL
8-21-12	REVISED TO MATCH CONSTRUCTION SPECIFICATION REVISIONS	MRS	PJL

MEDIAN ISLAND
WITH UNDERDRAIN

DEVELOPMENT SERVICES

Good Starts Here
SHAWNEE KANSAS

DATE:	08-27-2007	3216
DRAWN BY:	MRS	
CHECKED BY:	PJL	SHEET 2 OF 2

REV.	DATE	REVISIONS	BY	APP'D
1				
2				
3				
4				
5				

Designed By: PRP
Drawn By: JCK/JAA
Checked By: HDL
Issue Date: SEPT. 2016

COPYRIGHT © -2016-SHAFER, KLINE & WARREN INC.

SHAFER, KLINE & WARREN
11250 Corporate Avenue
Lenexa, KS 66219-1392
913.888.7800 FAX: 913.888.7868
SURVEYING | ENGINEERING | CONSTRUCTION

CLEAR CREEK PARKWAY
CITY OF SHAWNEE, KANSAS

ROADWAY DETAILS (2)

150561-010

LAYOUT: MODEL BY: jadams DATE: 20-SEP-2016 10:20:35 AM
L:\150561-010_Cad\Civil\Roadway Details\150561-010_ROAD-DET-02.dgn

NOT FOR CONSTRUCTION

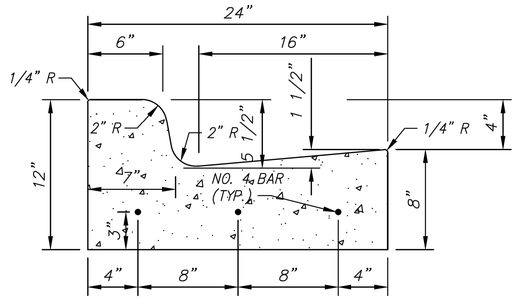

TYPE A

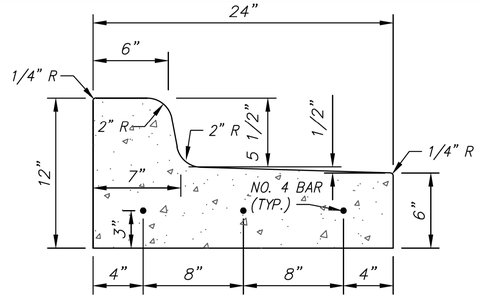

TYPE A1 (DRY)

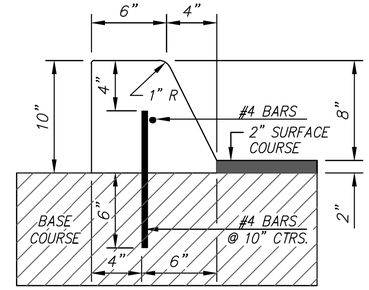

TYPE D

MEDIAN CURB

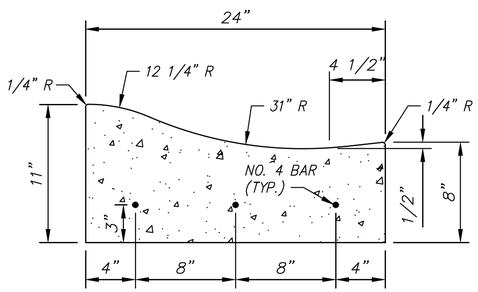

TYPE B

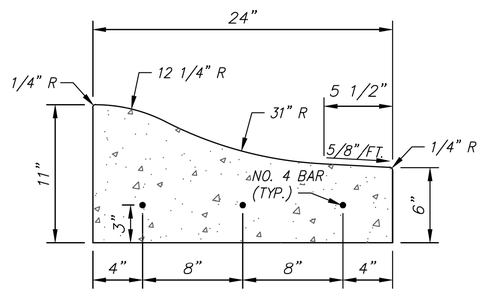

TYPE B1 (DRY)

CONCRETE CURB & GUTTER

NOTES:

1. 1/2" PREMOLDED EXPANSION JOINT MATERIAL SHALL BE PLACED AT POINTS OF CURVATURE, CURB RETURNS, CURB INLETS, AND AT 250' CENTERS. CONTRACTION JOINTS SHALL BE 2" DEEP AND PLACED AT 10' INTERVALS EQUALLY SPACED BETWEEN EXPANSION JOINTS.
2. ALL CONCRETE USED FOR A PUBLIC IMPROVEMENT SHALL COMPLY WITH THE STANDARDS AND SPECIFICATIONS OF THE KANSAS CITY METRO MATERIALS BOARD (KCMMB). THE CONTRACTOR SHALL PROVIDE TO THE CITY ENGINEER THE CONCRETE SUPPLIER AND THE MIX NUMBER (KCMMB4K).
3. ALL REINFORCING STEEL SHALL BE TIED AND SUPPORTED ON CHAIRS.
4. JOINTS SHALL BE TOOLED IF CURB IS HAND FORMED.

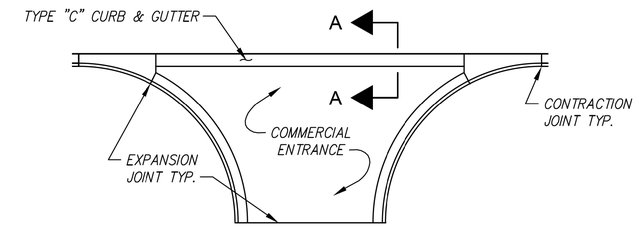

PLAN

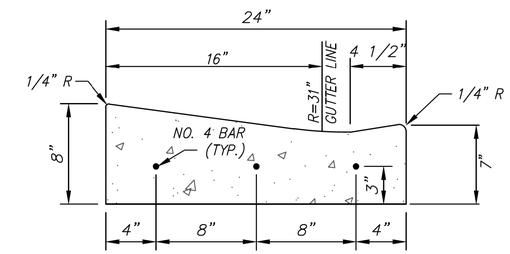

SECTION A-A

TYPE C CONCRETE CURB & GUTTER

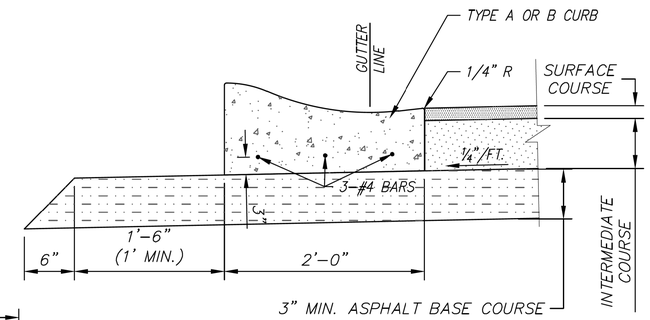

CURB WITH ASPHALT BENEATH

CURB SECTION WITH ASPHALT BENEATH

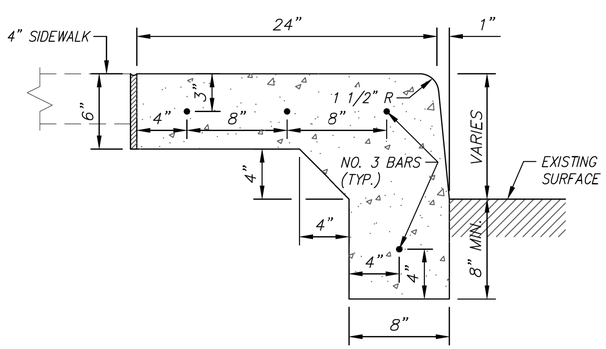

CROSS SECTION

INTEGRAL CURB & SIDEWALK

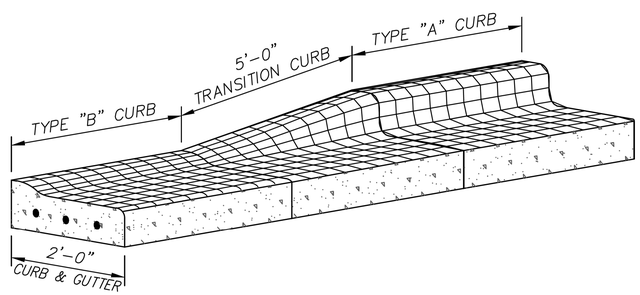

CURB TRANSITION DETAIL

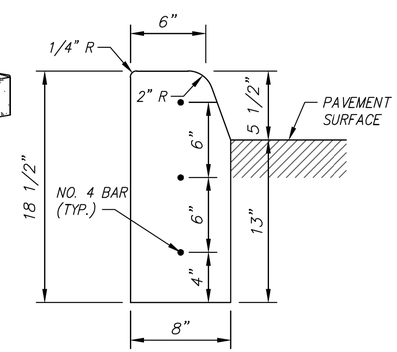

TYPE E

STRAIGHT CURB

Date	Revision	By	Appr.
3-1-14	SHAWNEE DESIGN & CONSTRUCTION MANUAL REVISIONS	MRS	PJL
8-21-12	REVISED TO MATCH CONSTRUCTION SPECIFICATION REVISIONS	MRS	PJL

CURB & GUTTER

DEVELOPMENT SERVICES

Great Starts Here SHAWNEE KANSAS

DATE:	08-27-2007	3220
DRAWN BY:	MRS	
CHECKED BY:	PJL	SHEET 1 OF 1

REV.	DATE	REVISIONS	BY	APP'D
1				
2				
3				
4				
5				

Designed By: PRP
Drawn By: JCK/JAA
Checked By: HDL
Issue Date: SEPT. 2016

COPYRIGHT © -2016-SHAFER, KLINE & WARREN INC.

SHAFER, KLINE & WARREN
11250 Corporate Avenue
Lenexa, KS 66219-1392
913.888.7800 FAX: 913.888.7868
SURVEYING | ENGINEERING | CONSTRUCTION

CLEAR CREEK PARKWAY
CITY OF SHAWNEE, KANSAS

ROADWAY DETAILS (3)

150561-010

LAYOUT: MODEL | BY: jadams | DATE: 20-SEP-2016 10:21:07 AM
L:\150561-010_Cad\Civil\Roadway Details\150561-010_ROAD-DET-03.dgn

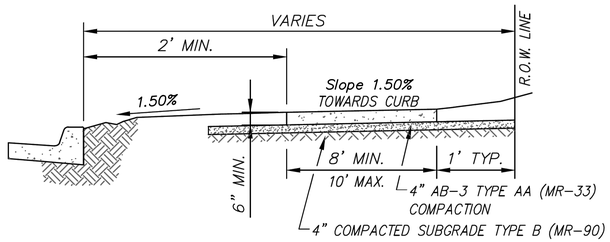

NOTES:

1. JOINTS SHALL BE SAWED AT RIGHT ANGLES TO THE ALIGNMENT OF THE RECREATIONAL TRAIL AND TO THE DEPTHS INDICATED BELOW; NO TRANSVERSE TOOLED JOINTS ALLOWED.

2. THE RECREATIONAL TRAIL SHALL BE MARKED OFF INTO SQUARE STONES BY CONTRACTION JOINTS. CONTRACTION JOINTS SHALL BE ONE-EIGHTH (1/8) INCH WIDE BY ONE (1) INCH DEEP AND SHALL BE MADE WITH THE USE OF A CONCRETE SAW ONLY.

3. EXPANSION JOINTS SHALL BE FORMED BY A ONE-HALF (1/2) INCH THICK PREFORMED JOINT FILLER, EXTENDING THE FULL DEPTH OF THE SLAB, AND SECURED SO THAT THEY ARE NOT MOVED BY DEPOSITING AND COMPACTING THE CONCRETE AT THESE JOINTS. 3/4" JOINT FILLER WILL BE USED FOR 100' SPACING.

~~4. EXPANSION JOINTS SHALL BE PLACED WHERE THE TRAIL ABUTS OTHER STRUCTURES AND SHALL NOT BE SPACED MORE THAN 50 FEET APART ON STRAIGHT RUNS FOR HAND LAID TRAIL AND NOT MORE THAN 100 FEET APART ON STRAIGHT RUNS FOR MACHINE LAID TRAILS.~~

~~5. ALL CONCRETE SHALL BE "KCMMB4K".~~

9. AB-3 MUST BE MOIST (MIN 5% MOISTURE) AND COMPACTED. CLEAN ROCK (3/4") SHALL BE USED WHERE SIDEWALK IS PLACED LESS THAN 100' IN A CONTINUOUS LENGTH AND WHERE SIDEWALK IS PLACES AS PART OF A BUILDING PERMIT FOR A SINGLE FAMILY OR MULTI-FAMILY UNIT.

10. REFER TO SECTION 4405 OF THE SHAWNEE DESIGN AND CONSTRUCTION MANUAL FOR CURING REQUIREMENTS.

RECREATIONAL TRAIL

EXPANSION JOINTS SHALL BE PLACED WHERE THE TRAIL ABUTS OTHER STRUCTURES AND SHALL NOT BE SPACED MORE THAN 250 FEET APART ON STRAIGHT RUNS FOR HAND LAID TRAIL AND NOT MORE THAN 250 FEET APART ON STRAIGHT RUNS FOR MACHINE LAID TRAILS.

ALL CONCRETE SHALL BE "KCMMB4K" WITH FIBER REINFORCEMENT.

Date	Revision	By	Appr
3-1-14	SHAWNEE DESIGN & CONSTRUCTION MANUAL REVISIONS	MRS	PJL
8-21-12	REVISED TO MATCH CONSTRUCTION SPECIFICATION REVISIONS	MRS	PJL

RECREATIONAL TRAIL

DEVELOPMENT SERVICES

Good Starts Here. SHAWNEE KANSAS

DATE:	08-27-2007	3230-1
DRAWN BY:	MRS	
CHECKED BY:	PJL	SHEET 1 OF 1

Pavement	T
Asphalt Option	10"
Concrete Option	8"

NOT FOR CONSTRUCTION

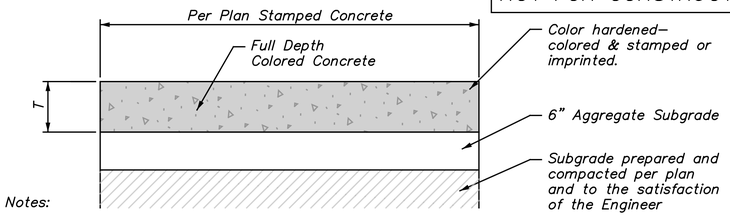

Notes:

1. Refer to sheet layout for stamped concrete locations.

2. All stamped concrete mix design shall be approved by the engineer prior to installation.

3. Areas designated for colored, stamped concrete in the plans, concrete shall contain chromix admixture for color - conditioned concrete colors & finish shall be as noted in schedule and final samples approved per engineer.

4. Subgrade prep and installation is to the satisfaction of the engineer. This item is subsidiary to other items.

Stamped Concrete Section

(Use at Roundabout & All Crosswalks)

Stamped Concrete Flatwork Schedule

Patterns	Type	Finish	Color
Herringbone Used Brick	Stamped Concrete	As Noted	Antique Red

Basis of design for stamped concrete:

Manufacturer, the bomanite company or approved equal. Pattern shall be bomacron- used brick textured pattern, t1-21063 4"x8" herringbone used brick single 33 masonite. Contractor shall submit a sample for final approval.

System shall follow manufacturer installation specifications.

Color shall be hardener. Bomanite color hardener as noted.

Powdered release agent per manufacture specification. Secondary antique topical stain per approved sample.

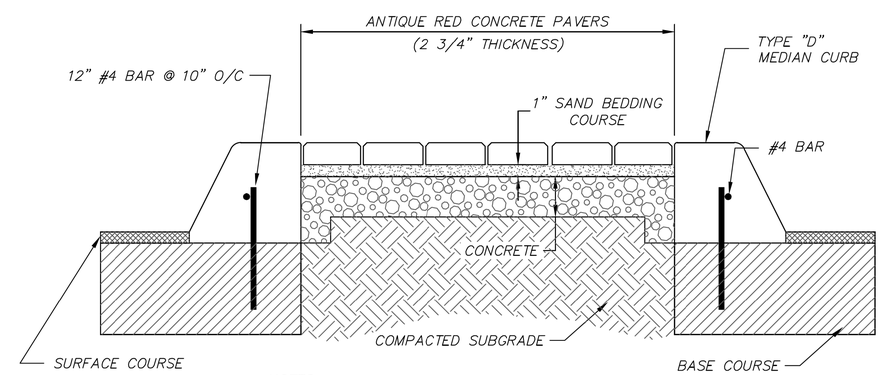

NOTES:

1. INSTALLATION TO BE COMPLETED IN ACCORDANCE WITH MANUFACTURER'S SPECIFICATIONS.

2. CONFIRM COLOR AND SIZE WITH OWNER PRIOR TO INSTALLATION.

3. A MIN. OF 2 WEEP HOLES (1 1/2 DIA. PVC) SHALL BE INSTALLED AT LOW END OF MEDIAN THROUGH CURB.

Note:
This project uses Type "E" Median Curb. All other details are similar.

MEDIAN PAVER DETAIL

REV.	DATE	REVISIONS	BY	APP'D
1				
2				
3				
4				
5				

Designed By: PRP
Drawn By: JCK/JAA
Checked By: HDL
Issue Date: SEPT. 2016

COPYRIGHT © -2016-SHAFER, KLINE & WARREN INC.

SHAFER, KLINE & WARREN
11250 Corporate Avenue
Lenexa, KS 66219-1392
913.888.7800 FAX: 913.888.7868
SURVEYING | ENGINEERING | CONSTRUCTION

CLEAR CREEK PARKWAY
CITY OF SHAWNEE, KANSAS

ROADWAY DETAILS (4)

150561-010

SHEET NO.
54 OF 182

LAYOUT: MODEL | BY: jadams | DATE: 20-SEP-2016 10:21:34 AM
L:\150561-010_Cad\Civil\Roadway Details\150561-010_ROAD-DET-04.dgn

NOT FOR CONSTRUCTION

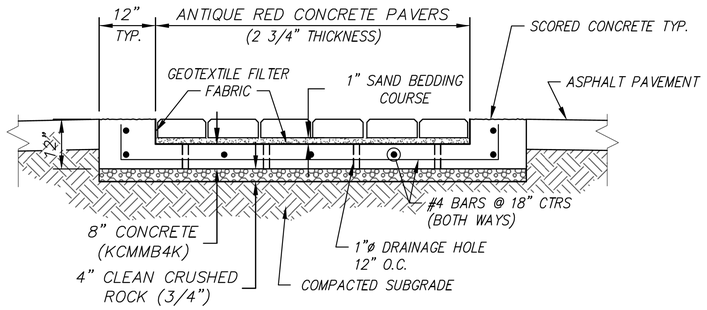

NOTES:

1. INSTALLATION TO BE COMPLETED IN ACCORDANCE WITH MANUFACTURER'S SPECIFICATIONS.
2. CONFIRM COLOR AND SIZE WITH OWNER PRIOR TO INSTALLATION

CROSSWALK / CONCRETE PAVER DETAIL

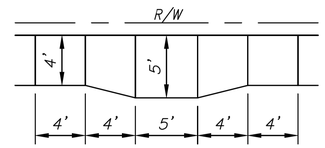

NOTES:
1. WHEELCHAIR PASSING SPACE SHALL BE CONSTRUCTED WHERE LENGTH OF 4' WIDE SIDEWALK EXCEEDS 200'.

WHEELCHAIR PASSING SPACE

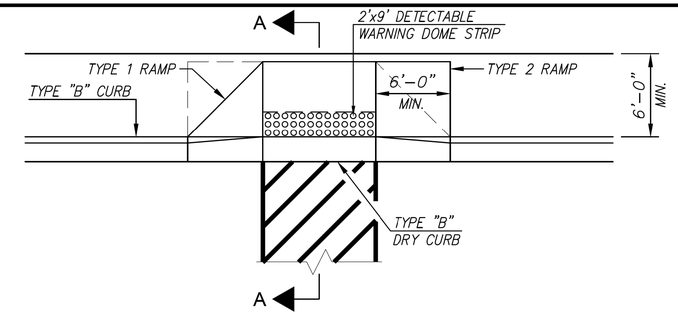

PLAN

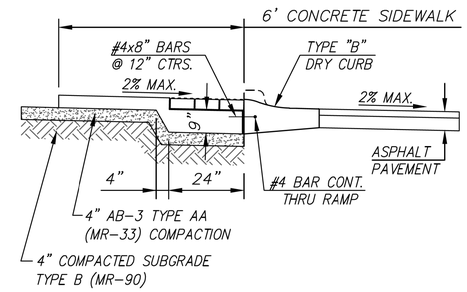

SECTION A-A

NOTES:

PAVING BRICK SHALL BE 2 1/4" X 3 5/8" X 7 5/8" ENDICOTT CLAY PRODUCTS CO., HANDICAP DETECTABLE WARNING PAVERS, MANGANESE IRONSPOT COLOR, OR APPROVED EQUAL AND SHALL MEET THE REQUIREMENTS OF ASTM C902 FOR CLASS SX TYPE 1 BRICK AND ASTM C1272.

~~THE BRICKS SHALL BE PLACED IN A SOLDIER COURSE PATTERN.~~

~~THE BRICKS SHALL BE SAW CUT ONLY AND ANY BRICK SHALL NOT BE LESS THAN 25% OF A FULL BRICK.~~

TYPE M MORTAR SHALL BE USED FOR THE SETTING BED AND JOINTS IN ACCORDANCE WITH ASTM C270, TABLE 1 (MASONRY CEMENT TYPE ONLY).

TYPE 1 RAMP SHALL BE USED WHEN SIDEWALK IS GREATER THAN 6' OR LESS IN WIDTH.

TYPE 2 RAMP SHALL BE USED WHEN SIDEWALK IS 6' IN WIDTH.

TRUNCATED DOME MID-BLOCK RAMP DETAIL

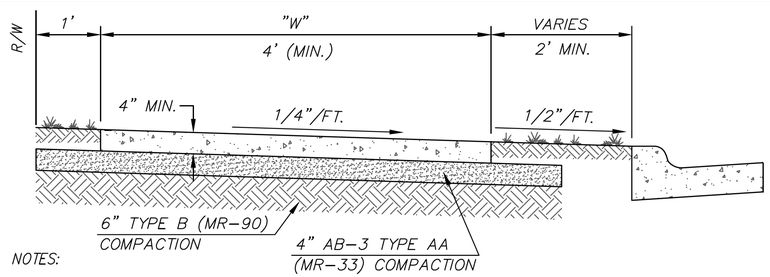

NOTES:

1. TOOLED JOINTS SHALL BE PLACED "W" CENTERS.
2. EXPANSION JOINTS SHALL BE PLACED AT 250' CENTERS AND WHERE WALK ABUTS EXISTING CONCRETE.
3. ALL CONCRETE SHALL BE KCMMB4K.
4. ALL SIDES OF EACH PANEL SHALL HAVE A 3" "PICTURE FRAME" EDGING, UNLESS OTHERWISE APPROVED OR NOTED ON THE PLANS.
5. WHEN UTILITY SERVICE BOXES, METER BOXES, ETC. WHICH MEASURE LESS THAN 1 FT. SQUARE MUST BE PLACED IN THE SIDEWALK, THE UTILITY SERVICE BOXES, ETC. SHALL BE NO CLOSER TO ANY EDGE OF THE SIDEWALK PANEL THAN 1 FT.
6. WHEN UTILITY BOXES, METER BOXES, ETC. GREATER THAN 1 FT. IN ANY DIMENSION MUST BE PLACED IN THE SIDEWALK, THEY SHALL BE PLACED IN THE CORNER OF THE SIDEWALK PANEL. IN ADDITION, FLOWABLE FILL SHALL BE USED AS BACKFILL FOR THESE STRUCTURES AND SHALL EXTEND TO UNEXCAVATED GROUND.
7. AN ISOLATION JOINT SHALL BE PLACED BETWEEN THE CONCRETE AND ANY UTILITY BOX, ETC. WHICH IS PLACED IN THE SIDEWALK.
8. NO SECTION OF SIDEWALK LESS THAN 12" IN ANY DIMENSION.
9. AB-3 MUST BE MOIST (MIN 5% MOISTURE) AND COMPACTED. CLEAN ROCK (¾") SHALL BE USED WHERE SIDEWALK IS PLACED LESS THAN 100' IN A CONTINUOUS LENGTH AND WHERE SIDEWALK IS PLACES AS PART OF A BUILDING PERMIT FOR A SINGLE FAMILY OR MULTI-FAMILY UNIT.
10. IT IS THE CONTRACTORS RESPONSIBILITY TO CONSTRUCT SIDEWALK PER ADA REQUIREMENTS.
11. REFER TO SECTION 4405 FOR CURING REQUIREMENTS.

TYPICAL SIDEWALK

Date	Revision	By	Appr.
3-1-14	SHAWNEE DESIGN & CONSTRUCTION MANUAL REVISIONS	MRS	PJL
8-21-12	REVISED TO MATCH CONSTRUCTION SPECIFICATION REVISIONS	MRS	PJL

SIDEWALK DETAILS

DEVELOPMENT SERVICES

Good Starts Here — SHAWNEE KANSAS

DATE:	08-27-2007	3225
DRAWN BY:	MRS	
CHECKED BY:	PJL	SHEET 1 OF 1

REV.	DATE	REVISIONS	BY	APP'D
1				
2				
3				
4				
5				

Designed By: PRP
Drawn By: JCK/JAA
Checked By: HDL
Issue Date: SEPT. 2016

COPYRIGHT © -2016-SHAFER, KLINE & WARREN INC.

SHAFER, KLINE & WARREN
11250 Corporate Avenue
Lenexa, KS 66219-1392
913.888.7800 FAX: 913.888.7868
SURVEYING | ENGINEERING | CONSTRUCTION

CLEAR CREEK PARKWAY
CITY OF SHAWNEE, KANSAS

ROADWAY DETAILS (5)

150561-010

LAYOUT: MODEL BY: jadams DATE: 20-SEP-2016 10:21:49 AM
L:\150561-010_Cad\Civil\Roadway Details\150561-010_ROAD-DET-05.dgn

NOT FOR CONSTRUCTION

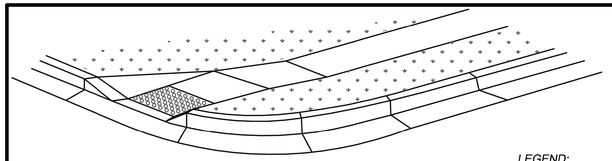

3-D VIEW TYPE A
SIDEWALK RAMP
NOT TO SCALE

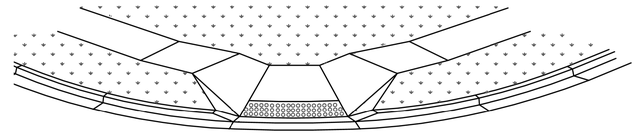

3-D VIEW TYPE B
SIDEWALK RAMP
NOT TO SCALE

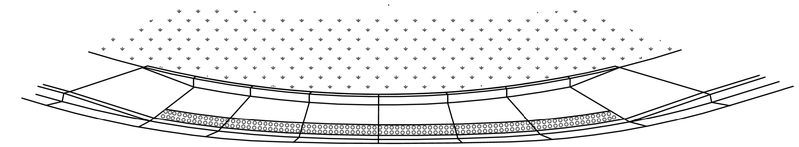

3-D VIEW TYPE C
SIDEWALK RAMP
NOT TO SCALE

LEGEND:

- R — RAMP
- L — LANDING
- 2'-0" DETECTABLE WARNING PANELS
- T — TRANSITION

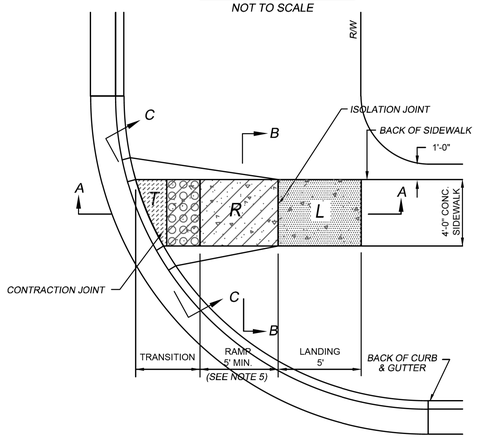

TYPE A SIDEWALK RAMP
SCALE: ¼"=1'-0"

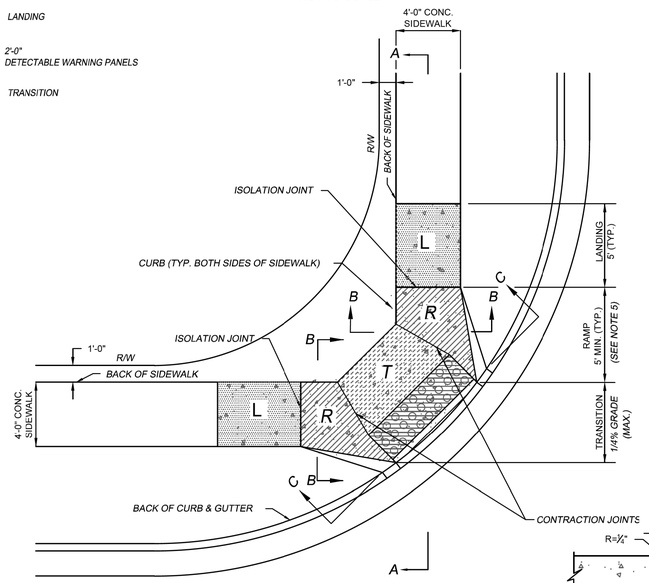

TYPE B SIDEWALK RAMP
SCALE: ¼"=1'-0"

SIDEWALK RAMP NOTES:

1. SIDEWALK RAMP LOCATION DETERMINED FROM THE INTERSECTION OF THE EXTENSION OF BACK OF SIDEWALK AND BACK OF CURB AND GUTTER.
2. KEY ALL CONSTRUCTION JOINTS OR USE 18"-#4 EPOXY COATED TIE BARS @ 12" O.C.
3. LONGITUDINAL JOINT SPACING TO MATCH WIDTH OF SIDEWALK.
4. ISOLATION JOINTS SHALL BE PLACED WHERE SIDEWALK ABUTS DRIVEWAYS AND SIMILAR STRUCTURES, AND 250' CENTERS MAX.
5. SIDEWALK RAMP SHALL BE LENGTHENED TO PROVIDE ADA COMPLIANCE BUT NEED NOT EXCEED 15'.
6. LANDING FOR TYPE C CURB RAMP ALONG THE ENTIRE CURB RETURN IS PREFERRED BUT MAY BE SHORTENED TO MINIMUM ADA COMPLIANT DIMENSION.
7. DETECTABLE WARNING PANELS SHALL BE, CAST IN TACT 2X2 PANELS - SALEM RED, ARMOR-TILE CAST IN PLACE 2X4 PANEL - BRICK RED, DETECTASHIELD 2X2 PANELS - BRICK RED, OR APPROVED EQUAL.

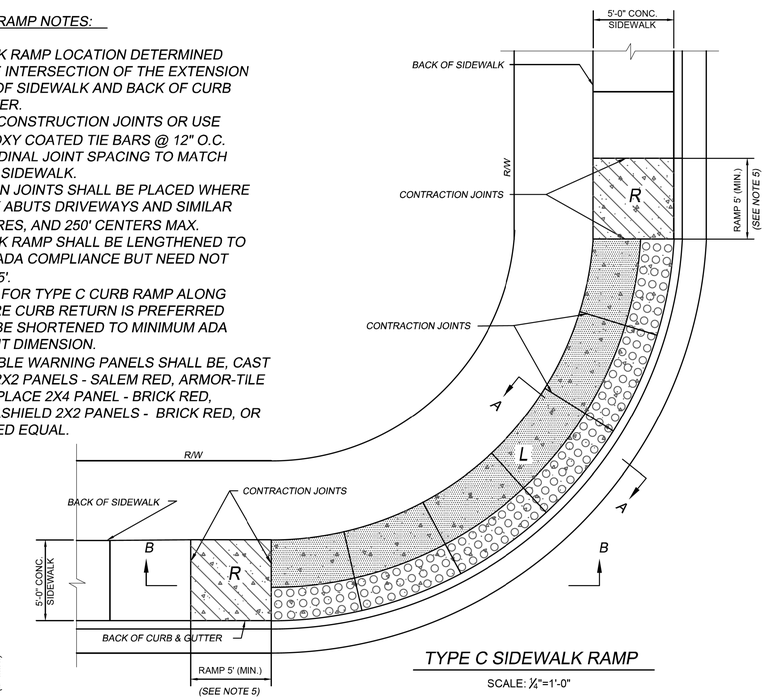

TYPE C SIDEWALK RAMP
SCALE: ¼"=1'-0"

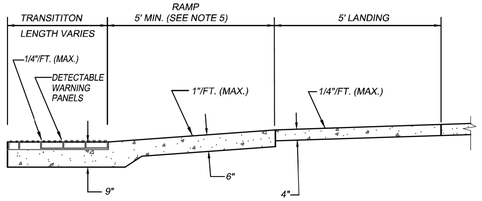

SECTION A-A
TYPE A & B SIDEWALK RAMP
SCALE: ½"=1'-0"

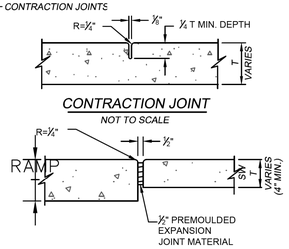

CONTRACTION JOINT
NOT TO SCALE

ISOLATION JOINT
NOT TO SCALE

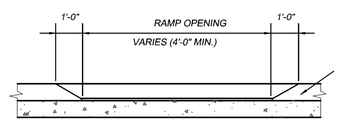

SECTION C-C
TYPE A & B SIDEWALK RAMP
SCALE: ½"=1'-0"

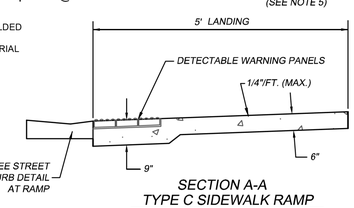

SECTION A-A
TYPE C SIDEWALK RAMP
SCALE: ½"=1'-0"

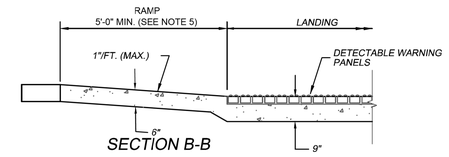

SECTION B-B
TYPE C SIDEWALK RAMP
SCALE: ½"=1'-0"

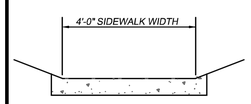

SECTION B-B
TYPE A SIDEWALK RAMP
SCALE: ½"=1'-0"

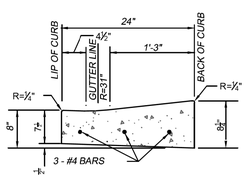

USE WITH TYPE A CURB

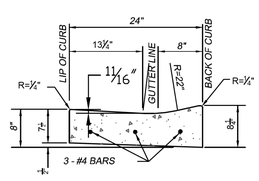

USE WITH TYPE B CURB

STREET CURB DETAIL AT RAMP
NOT TO SCALE

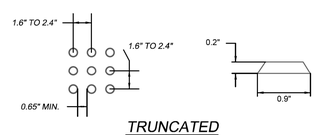

TRUNCATED
DOME DIMENSONS

Date	Revision	By	Appr.
3-1-14	SHAWNEE DESIGN & CONSTRUCTION MANUAL REVISIONS	MRS	PJL
8-21-12	REVISED TO MATCH CONSTRUCTION SPECIFICATION REVISIONS	MRS	PJL

SIDEWALK RAMP DETAILS

DEVELOPMENT SERVICES

Good Starts Here. SHAWNEE KANSAS

DATE:	08-27-2007	3225-3
DRAWN BY:	MRS	
CHECKED BY:	PJL	SHEET 1 OF 1

REV.	DATE	REVISIONS	BY	APP'D
5				
4				
3				
2				
1				

Designed By: PRP
Drawn By: JCK/JAA
Checked By: HDL
Issue Date: SEPT. 2016

COPYRIGHT © -2016-SHAFER, KLINE & WARREN INC.

SHAFER, KLINE & WARREN
11250 Corporate Avenue
Lenexa, KS 66219-1392
913.888.7800 FAX: 913.888.7868
SURVEYING | ENGINEERING | CONSTRUCTION

CLEAR CREEK PARKWAY
CITY OF SHAWNEE, KANSAS

ROADWAY DETAILS (6)

150561-010

SHEET NO.
56 OF 182

LAYOUT: MODEL | BY: jadams | DATE: 20-SEP-2016 10:22:15 AM
L:\150561-010_Cad\Civil\Roadway Details\150561-010_ROAD-DET-06.dgn

NOT FOR CONSTRUCTION

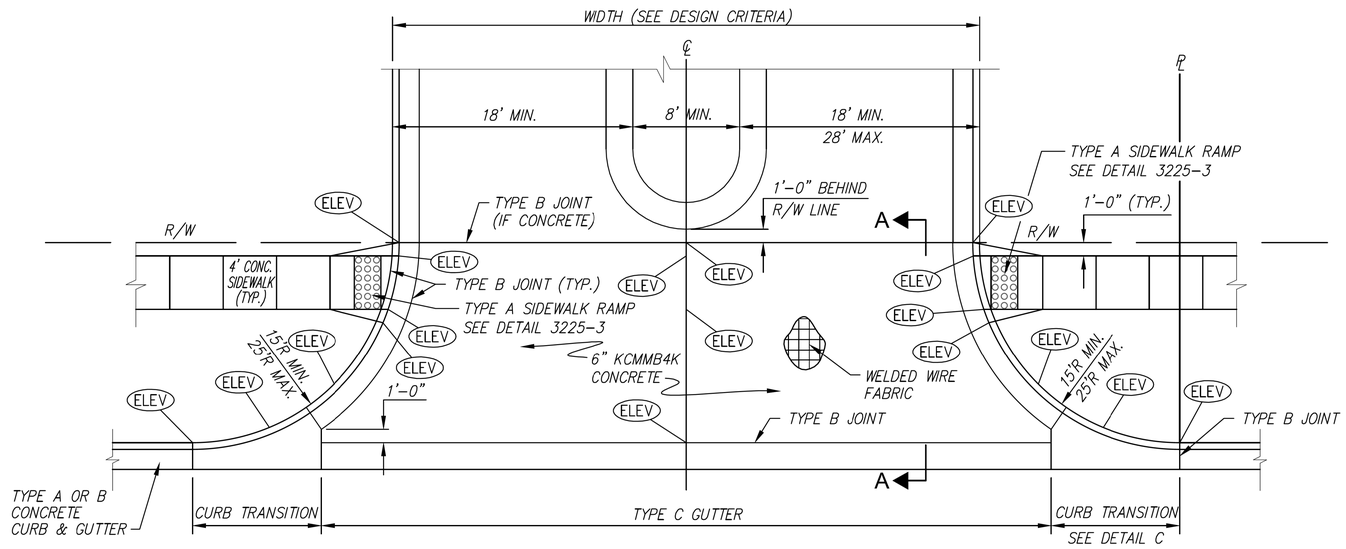

PLAN

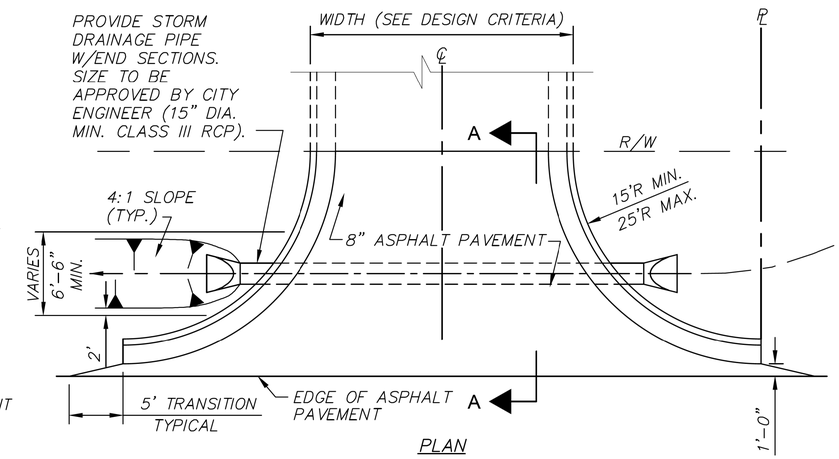

PLAN

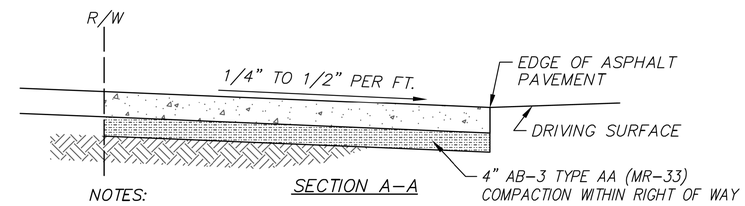

SECTION A–A

NOTES:

1. ALL CONCRETE USED IN THIS WORK SHALL MEET THE REQUIREMENTS OF THE SHAWNEE MUNICIPAL CODE. KCMMB4K CONCRETE SHALL BE USED THROUGHOUT.
2. CONCRETE PAVEMENT SHALL BE JOINTED WITH TYPE A JOINTS. NO JOINTED SLAB SHALL EXCEED 12' X 12'.
3. COMMERCIAL ENTRANCE SHALL NOT EXTEND PAST SIDE PROPERTY LINE EXTENSION.

COMMERCIAL DRIVE APPROACH - TYPE "II"

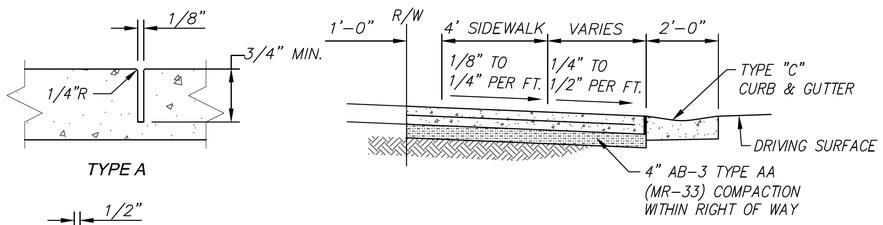

SECTION A–A

JOINT DETAILS

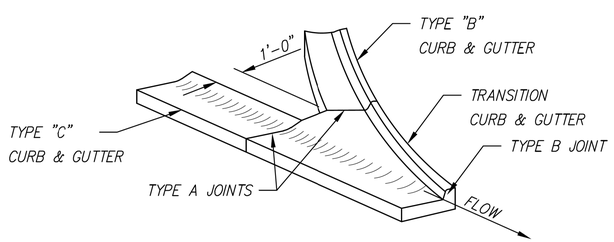

DETAIL C

COMMERCIAL DRIVE NOTES:

1. ALL CONCRETE USED IN THIS WORK SHALL MEET THE REQUIREMENTS OF THE SHAWNEE MUNICIPAL CODE. KCMMB4K CONCRETE SHALL BE USED THROUGHOUT.
2. CONCRETE PAVEMENT SHALL BE JOINTED WITH TYPE A JOINTS. NO JOINTED SLAB SHALL EXCEED 12' X 12'.
3. DOWELS ARE NOT REQUIRED FOR TYPE B JOINTS BETWEEN THE DRIVEWAY APRON AND ABUTTING CURB AND GUTTER, OR BETWEEN COMMERCIAL ENTRANCE CURB AND ABUTTING SIDEWALK.
4. IF EXISTING STREET CURB TYPE IS TYPE B, CURB MUST BE REMOVED BETWEEN RADIUS POINTS AND REPLACED WITH TRANSITION CURB AND TYPE C GUTTER.
5. COMMERCIAL ENTRANCE SHALL NOT EXTEND PAST SIDE PROPERTY LINE EXTENSION.

COMMERCIAL DRIVE APPROACH - TYPE "I"

Date	Revision	By	Appr
3-1-14	SHAWNEE DESIGN & CONSTRUCTION MANUAL REVISIONS	MRS	PJL
8-21-12	REVISED TO MATCH CONSTRUCTION SPECIFICATION REVISIONS	MRS	PJL

COMMERCIAL
DRIVE APPROACHES

DEVELOPMENT SERVICES

Quality Starts Here SHAWNEE KANSAS

DATE:	08-27-2007	3227
DRAWN BY:	MRS	
CHECKED BY:	PJL	SHEET 2 OF 2

REV.	DATE	REVISIONS	BY	APP'D
5				
4				
3				
2				
1				

Designed By: PRP
Drawn By: JCK/JAA
Checked By: HDL
Issue Date: SEPT. 2016

COPYRIGHT © -2016-SHAFER, KLINE & WARREN INC.

SHAFER, KLINE & WARREN
11250 Corporate Avenue
Lenexa, KS 66219-1392
913.888.7800 FAX: 913.888.7868
SURVEYING | ENGINEERING | CONSTRUCTION

CLEAR CREEK PARKWAY
CITY OF SHAWNEE, KANSAS

ROADWAY DETAILS (7)

150561-010

LAYOUT: MODEL | BY: jadams | DATE: 20-SEP-2016 10:22:53 AM
L:\150561-010_Cad\Civil\Roadway Details\150561-010_ROAD-DET-07.dgn

NOT FOR CONSTRUCTION

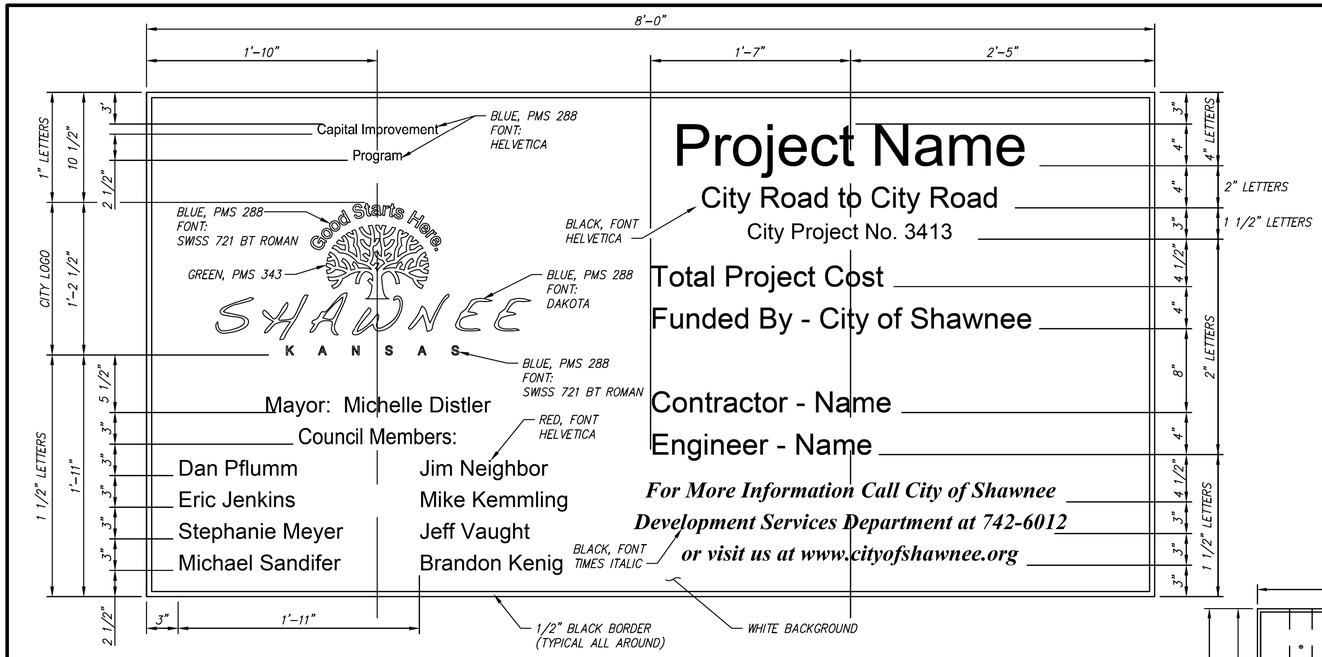

SIGN FACE DETAIL

NAMES MUST BE CURRENT, CONTRACTOR WILL BE REQUIRED TO UPDATE DURING CONSTRUCTION.

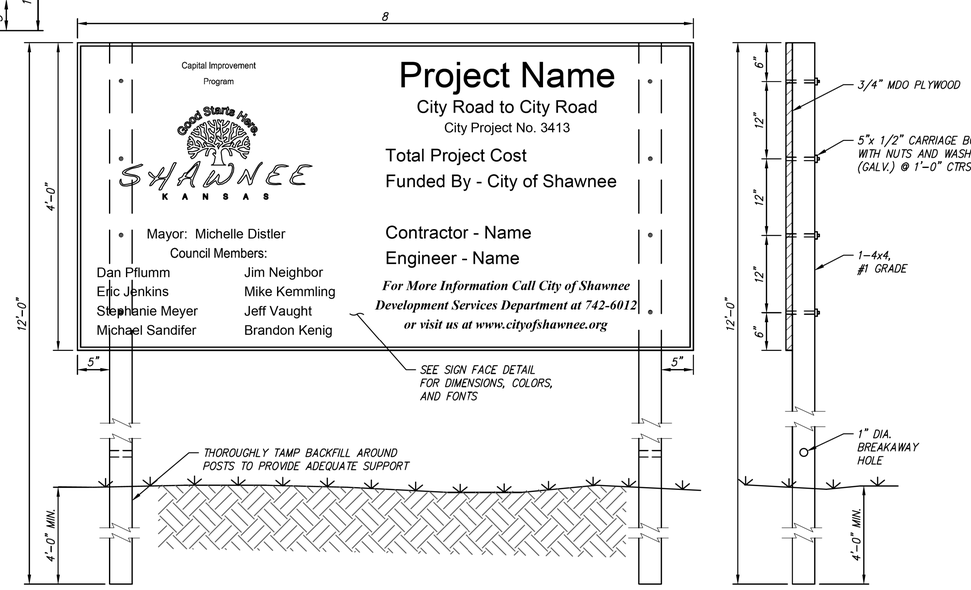

PROJECT SIGN NOTES:

1. LETTERING SHALL BE BOLD, ITALIC, AND ANTIQUE OLIVE STYLE AS SHOWN. LETTERING AND CITY LOGO SHALL BE BLOCK VINYL COMPUTER CUT SCOTCHCAL OR APPROVED EQUAL. PAINTED LETTERING OR LOGO SYMBOL SHALL NOT BE ALLOWED. ONE SIDE OF SIGN ONLY.
2. LETTER SIZES SHOWN ARE FOR CAPITAL LETTERS.
3. SIGN AND POSTS SHALL BE PAINTED ON ALL SIDES WITH TWO (2) COATS EXTERIOR WHITE PRIMER AND ONE (1) COAT EXTERIOR WHITE SEMI-GLASS FINISH.
4. A SCALE DRAWING OF THE SHAWNEE CITY LOGO AND COLOR SIGN MUST BE OBTAINED THROUGH THE CITY ENGINEER.
5. THE CONTRACTOR SHALL PROVIDE AND INSTALL PROJECT SIGN(S) ON THE PROJECT SITE IN THE NUMBERS AND LOCATIONS INDICATED ON THE PLANS OR AS DIRECTED BY THE ENGINEER. MEASUREMENT AND PAYMENT SHALL BE MADE AT THE CONTRACT UNIT PRICE BID PER EACH FOR THE BID ITEM "PROJECT SIGN".
6. SIGN SHALL BE ERECTED PRIOR TO ANY CONSTRUCTION ACTIVITY AND MAINTAINED BY THE CONTRACTOR THROUGHOUT CONSTRUCTION. SIGN SHALL BE REMOVED AND DISPOSED BY CONTRACTOR UPON PROJECT COMPLETION.
7. CONTENT OF ITEMS TO BE FILLED IN SHALL BE SUPPLIED BY THE CITY ENGINEER.
8. SAMPLES OF COLORS TO BE USED SHALL BE SUBMITTED TO THE CITY ENGINEER FOR APPROVAL.
9. THE SIGN SHALL BE MANUFACTURED BY A REPUTABLE, PROFESSIONAL SIGN MAKER.
10. ALL FONTS SHALL BE AS CALLED OUT IN THE DETAIL OR APPROVED EQUAL.
11. ALL COLORS, WITH EXCEPTION OF THE CITY LOGO, SHALL BE PANTONE COLORS AS CALLED OUT IN THE DETAIL OR APPROVED EQUAL. COLORS WERE SELECTED USING THE "PANTONE, COLOR FORMULA GUIDE PRINTER EDITION, FIRST EDITION 2001, SECOND PRINTING", WITH COLORS AS FOLLOWS:

COLOR	PANTONE COLOR NUMBER
BLACK	BLACK U
RED	200 U
BLUE	2925 U
GREEN	355 U
BLUE-GREEN	326 U

12. COLORS FOR THE CITY LOGO ARE CALLED OUT ON THE DETAIL. THE PMS 288 (BLUE) HAS THE FOLLOWING VALUES: C=100, M=67, Y=0, K=23. R=0, G=75, B=141. THE PMS 343 (GREEN) HAS THE FOLLOWING VALUES: C=98, M=0, Y=72, K=61. R=0, G=87, B=61. THE LOGO SHALL BE COMPUTER CUT SCOTCHCAL, OR APPROVED EQUAL, AND CANNOT BE PAINTED.

CITY PROJECT SIGN - STANDARD DETAILS

Date	Revision	By	Appr.
3-1-14	SHAWNEE DESIGN & CONSTRUCTION MANUAL REVISIONS	MRS	PJL
8-21-12	REVISED TO MATCH CONSTRUCTION SPECIFICATION REVISIONS	MRS	PJL

CITY PROJECT SIGN
& MOUNTING DETAIL

DEVELOPMENT SERVICES

Good Starts Here SHAWNEE KANSAS

DATE:	08-27-2007	3630-1
DRAWN BY:	MRS	
CHECKED BY:	PJL	SHEET 1 OF 1

REV.	DATE	REVISIONS	BY	APP'D
1				
2				
3				
4				
5				

Designed By: PRP
Drawn By: JCK/JAA
Checked By: HDL
Issue Date: SEPT. 2016

COPYRIGHT © -2016-SHAFER, KLINE & WARREN INC.

SHAFER, KLINE & WARREN
11250 Corporate Avenue
Lenexa, KS 66219-1392
913.888.7800 FAX: 913.888.7868
SURVEYING | ENGINEERING | CONSTRUCTION

CLEAR CREEK PARKWAY
CITY OF SHAWNEE, KANSAS

ROADWAY DETAILS (8)

150561-010

LAYOUT: MODEL | BY: jadams | DATE: 20-SEP-2016 10:23:17 AM
L:\150561-010_Cad\Civil\Roadway Details\150561-010_ROAD-DET-08.dgn

NOT FOR CONSTRUCTION

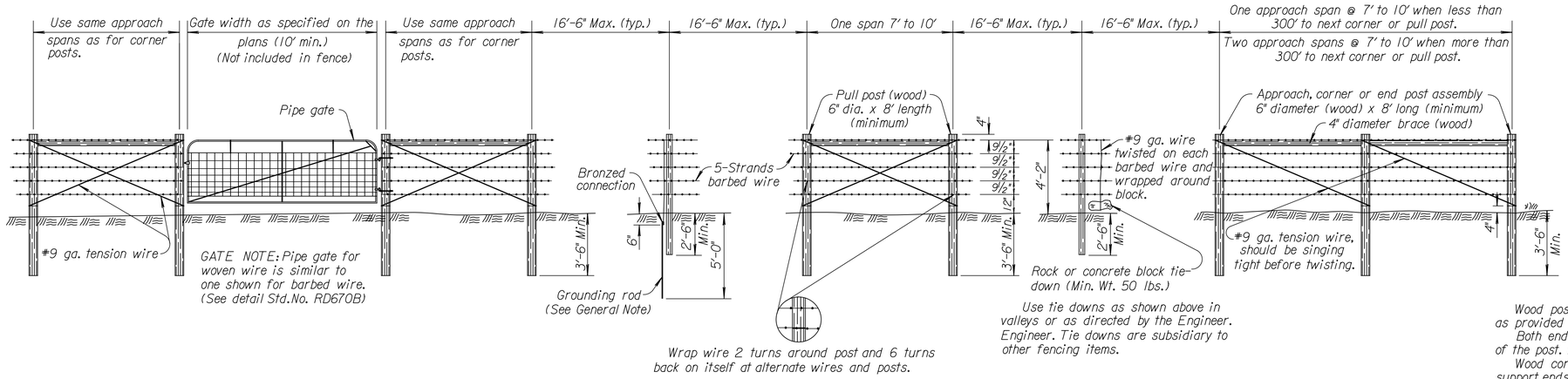

BARBED WIRE FENCE

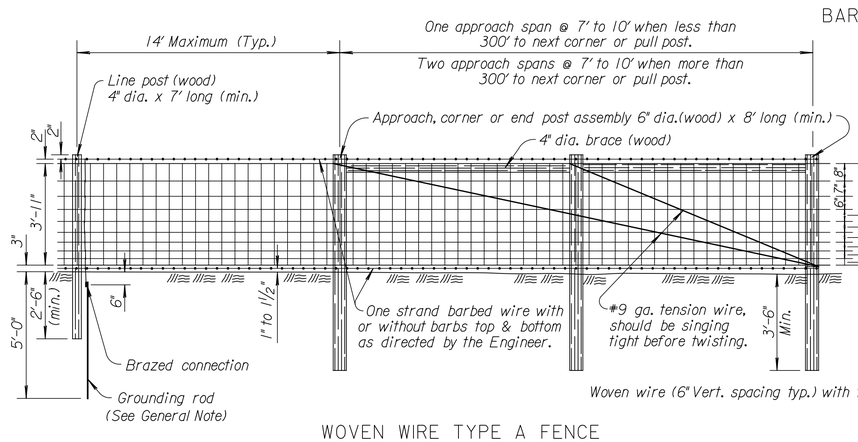

WOVEN WIRE TYPE A FENCE

Pull post assembly for woven wire with wood posts is similar to barbed wire pull post assembly detail.

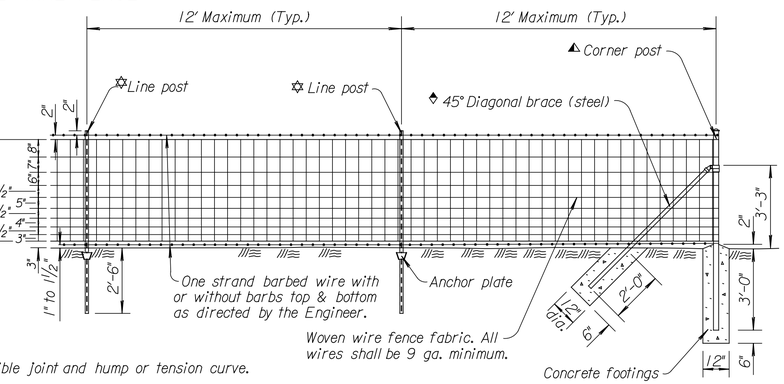

WOVEN WIRE TYPE B FENCE

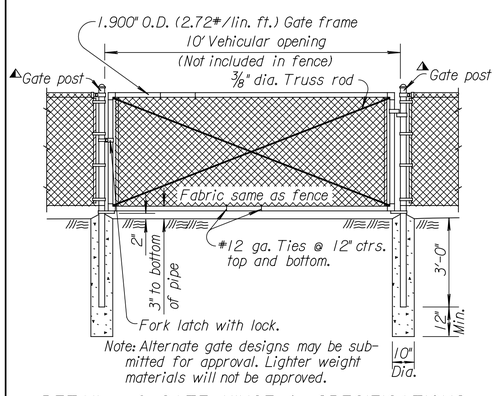

DETAIL of GATE, HINGE & SPECIFICATIONS

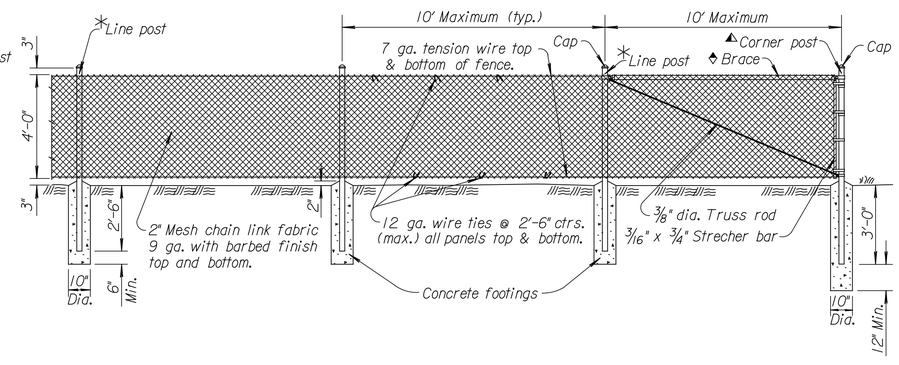

CHAIN LINK FENCE

(STEEL)

✡ Steel line post 7'-0" length
Studded T (1.33#/lin. ft.)
U (1.33#/lin. ft.)
H (2.27#/lin. ft.)

◆ Brace
1.660" O.D., 0.111" Th. (1.84#/lin. ft.) pipe (Group IC) or
1.660" O.D., 0.140" Th. (2.27#/lin. ft.) pipe (Group IA) or
1⅝"x1¼" Brace rail (See Alt. Details)

✱ Line post 7'-0" length.
2.375" O.D., 0.154" Th. (3.65#/lin. ft.) pipe (Group IA) or
2.375" O.D., 0.130" Th. (3.12#/lin. ft.) pipe (Group IC) or
1⅝"x1⅞" C Post (2.28#/lin. ft.)

▲ End, corner, gate, or pull post 7'-6" length.
(AI20) 2.875" O.D., 0.203" Th. (5.79#/lin. ft.) pipe (Group IA) or 2.875" O.D., 0.160" Th. (4.64#/lin.ft.) pipe (Group IC)

GENERAL NOTE

Wood posts and braces shall be given a preservative treatment as provided in the KDOT Standard Specifications.

Both ends of all wood posts shall be cut normal to the axis of the post. Pointed posts will not be permitted.

Wood corner, end, pull and approach posts shall be notched to support ends of wood braces. Wood braces shall be toenailed to the posts with 2-10d nails in each end of the brace.

When wood posts are used, both ends of all tension wires shall be wrapped around the posts twice and stapled in place.

When wood posts are used the fence shall be grounded by a ⅝" diameter galvanized or copper coated rod five feet long, driven vertically until the top is six inches below the ground surface. A #6 solid copper conductor shall be securely fastened to each element of the fence by use of clamps or other suitable device. Grounding rod shall be installed at intervals of 175' maximum.

In lieu of using the galvanized or copper coated rod as described above the contractor may, at his option, use a steel line post at intervals not to exceed each eighth post.

The galvanized or copper coated rod shall be used where power lines pass over the fence.

All steel posts, braces, fittings, and gate frames shall be galvanized and/or coated in accordance with the Standard Specifications.

Steel posts shall be provided with fasteners prevent slippage of the wire strands.

Outside diameters shown for tubular steel posts, bracing and gate frames are nominal. Weight tolerances shall be as shown in the KDOT Standard Specifications.

Posts may be set by driving or digging. If by digging, the posts shall be set in the center of the hole and the soil tamped securely on all sides.

Pull post assembly shall be used at sharp breaks in vertical grade or at approximately 330' centers (Woven & Chain link) or 1320' centers (Barbed wire) on straight runs or as directed by the Engineer.

Concrete used in fence installation shall conform to the requirements of the KDOT Standard Specifications.

Woven wire, chain link fabric, barbed wire and tension wire shall be either zinc coated (galvanized) or aluminum coated.

Minimum strength of barbed wire and tension wire shall be as provided in the KDOT Standard Specifications.

Use #9 gauge galvanized staples 1½" to 1¾" long, or #9 gauge galvanized Ring-shank staples 1½" to 1¾" long.

Alternate gate designs may be submitted for approval. Lighter weight materials will not be approved.

Padlocks for gates shall be furnished by the State.

No Wood Posts are allowed for new or reconstruction fence installations on the State Highway System. Shop drawings for steel gate post assembly designs are to be submitted to the State Road Office, Bureau of Design for approval prior to construction.

NO.	DATE	REVISIONS	BY	APP'D
9	11-30-09	Rev. post listing, wood po. restrict.	S.W.K.	J.O.B.
8	11-08-05	Revised brace dimension	S.W.K.	J.O.B.
7	11-02-04	Added assembly to end post label	S.W.K.	J.O.B.

KANSAS DEPARTMENT OF TRANSPORTATION

HIGHWAY FENCE
BARBED, WOVEN, & CHAIN LINK

RD670A

FHWA APPROVAL	12-16-09	APP'D. James O. Brewer	
DESIGNED	DETAILED	QUANTITIES	TRACED Bowser
DESIGN CK.	DETAIL CK.	QUAN.CK.	TRACE CK. King

REV.	DATE	REVISIONS	BY	APP'D
5				
4				
3				
2				
1				

Designed By: PRP
Drawn By: JCK/JAA
Checked By: HDL
Issue Date: SEPT. 2016

COPYRIGHT © -2016-SHAFER, KLINE & WARREN INC.

SHAFER, KLINE & WARREN
11250 Corporate Avenue
Lenexa, KS 66219-1392
913.888.7800 FAX: 913.888.7868
SURVEYING | ENGINEERING | CONSTRUCTION

CLEAR CREEK PARKWAY
CITY OF SHAWNEE, KANSAS

ROADWAY DETAILS (9)

150561-010

LAYOUT: MODEL | BY: jadams | DATE: 20-SEP-2016 10:23:40 AM
L:\150561-010_Cad\Civil\Roadway Details\150561-010_ROAD-DET-09.dgn

NOT FOR CONSTRUCTION

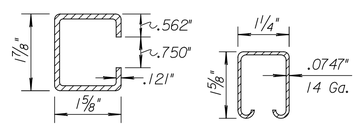

LINE POST (C)
2.28#/Lin. Ft.

BRACE RAIL SECTION

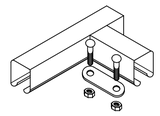

CORNER CONNECTOR
for BRACE RAILS

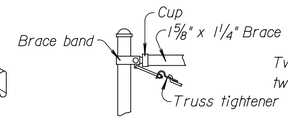

BRACE & TRUSS CONNECTION
at BRACE POST

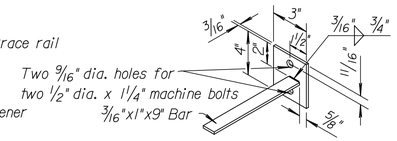

END POST TORQUE BAR

ALTERNATE CHAIN LINK DETAILS

GENERAL NOTE

A line post shall be used in the KDOT fence at each private cross fence, and the contractor shall make a temporary connection. This work shall be subsidiary to other bid items.

In general, where needed, use small channel crossing as shown. Type I and Type II Floodgates will be used very seldom.

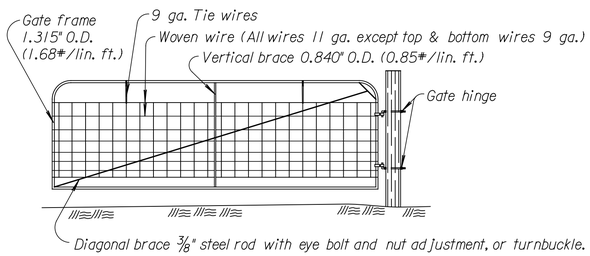

DETAIL of GATE, HINGE & SPECIFICATIONS
(for Barbed & Woven Fence)

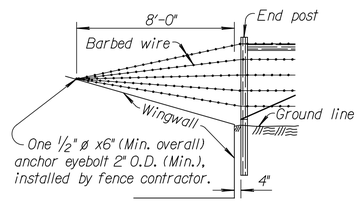

FENCE DETAILS
AT DRAINAGE STRUCTURES
(Type A, B, or Barbed wire fence.)

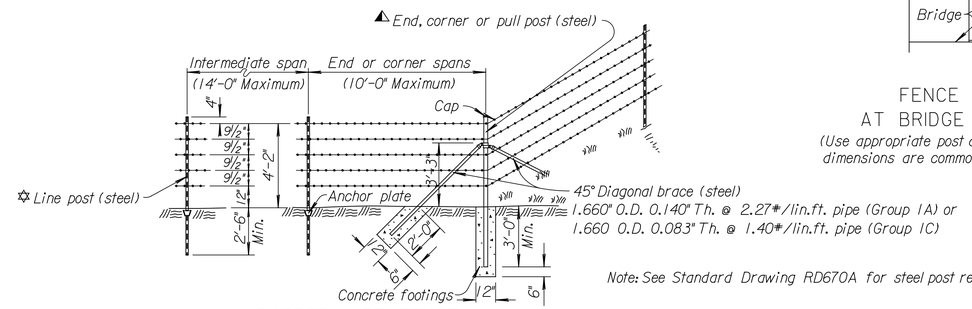

BARBED WIRE FENCE
STEEL POST (ALTERNATE)
Steel posts may be used in lieu of wood posts as shown above.

Note: See Standard Drawing RD670A for steel post requirements.

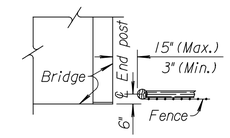

FENCE DETAILS
AT BRIDGE ABUTMENTS
(Use appropriate post and brace for fence type, dimensions are common for all fence types.)

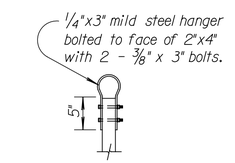

Type I bend hanger for loose fit on 1 1/4" dia. std. galv. pipe.
Type II bend hanger for loose fit on 3" dia. std. galv. pipe.

FLOODGATE
HANGER DETAIL

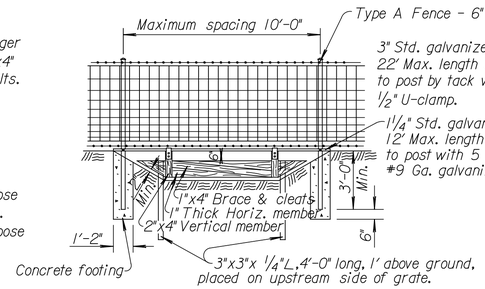

TYPE I FLOODGATE

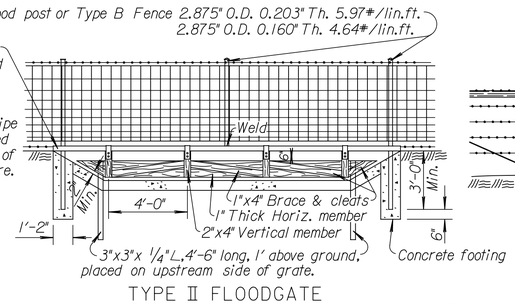

TYPE II FLOODGATE
(Grouted stone or concrete lined ditch.)

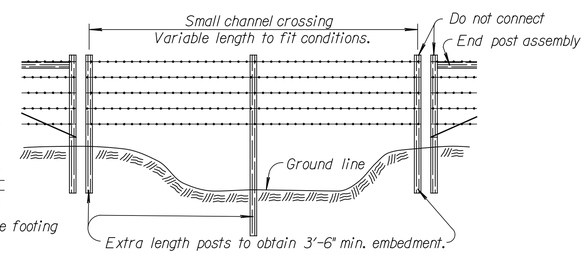

SMALL CHANNEL CROSSING
The above sketch is typical only and can be varied to fit existing conditions. Small channel crossings shall be included in lin. ft. of fence. All extra materials and labor within the small channel crossing shall be subsidiary to lin. ft. of fence.

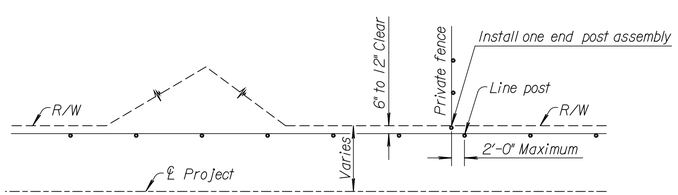

TYPICAL INSTALLATION DIAGRAM

Note: Right of Way fence shall generally be set parallel to and 6" to 12" clear from the Right of Way line.

The alignment layouts as shown are typical, but are not representative of all situations that may occur. Construction may be varied, as required to meet field conditions and/or as directed by the Engineer.

The access control fence shall be attached to the private fence end post assembly using leader wires or staples.

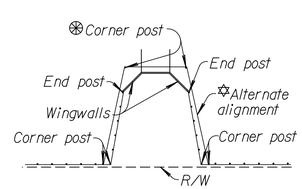

FENCE ALIGNMENT
AT UNDERPASS OR
BOX DRAINAGE STRUCTURE

Alternate alignment may be used at deep underfill culverts, as directed by the Engineer.

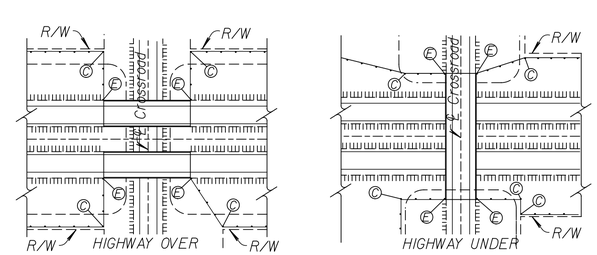

FENCE ALIGNMENT AT BRIDGE ABUTMENTS

Where fence installation over a drainage structure is located within the clear zone, horizontal bracing at the corner posts will not be permitted. An alternate design utilizing diagonal bracing shall be provided.

NO.	DATE	REVISIONS	BY	APP'D
7	7-28-09	Revised Steel size listing	S.W.K.	J.O.B.
6	11-02-04	Revised General Note	S.W.K.	J.O.B.
5	5-30-02	Removed KDOT ownership sign.	S.W.K.	J.O.B.
4	12-30-97	Connect to Private Fence End Post	R.J.S.	J.O.B.

KANSAS DEPARTMENT OF TRANSPORTATION

INSTALLATION DETAILS
BARBED, WOVEN, & CHAIN LINK

RD670B

FHWA APPROVAL	12-16-09	APP'D. James O. Brewer	
DESIGNED	DETAILED	QUANTITIES	TRACED Bowser
DESIGN CK.	DETAIL CK.	QUAN.CK.	TRACE CK. King

REV.	DATE	REVISIONS	BY	APP'D
5				
4				
3				
2				
1				

Designed By: PRP
Drawn By: JCK/JAA
Checked By: HDL
Issue Date: SEPT. 2016

COPYRIGHT © -2016-SHAFER, KLINE & WARREN INC.

SHAFER, KLINE & WARREN
11250 Corporate Avenue
Lenexa, KS 66219-1392
913.888.7800 FAX: 913.888.7868
SURVEYING | ENGINEERING | CONSTRUCTION

CLEAR CREEK PARKWAY
CITY OF SHAWNEE, KANSAS

ROADWAY DETAILS (10)

150561-010

SHEET NO.
60 OF 182

LAYOUT: MODEL BY: jadams DATE: 20-SEP-2016 10:23:43 AM
L:\150561-010_Cad\Civil\Roadway Details\150561-010_ROAD-DET-10.dgn

NOT FOR CONSTRUCTION

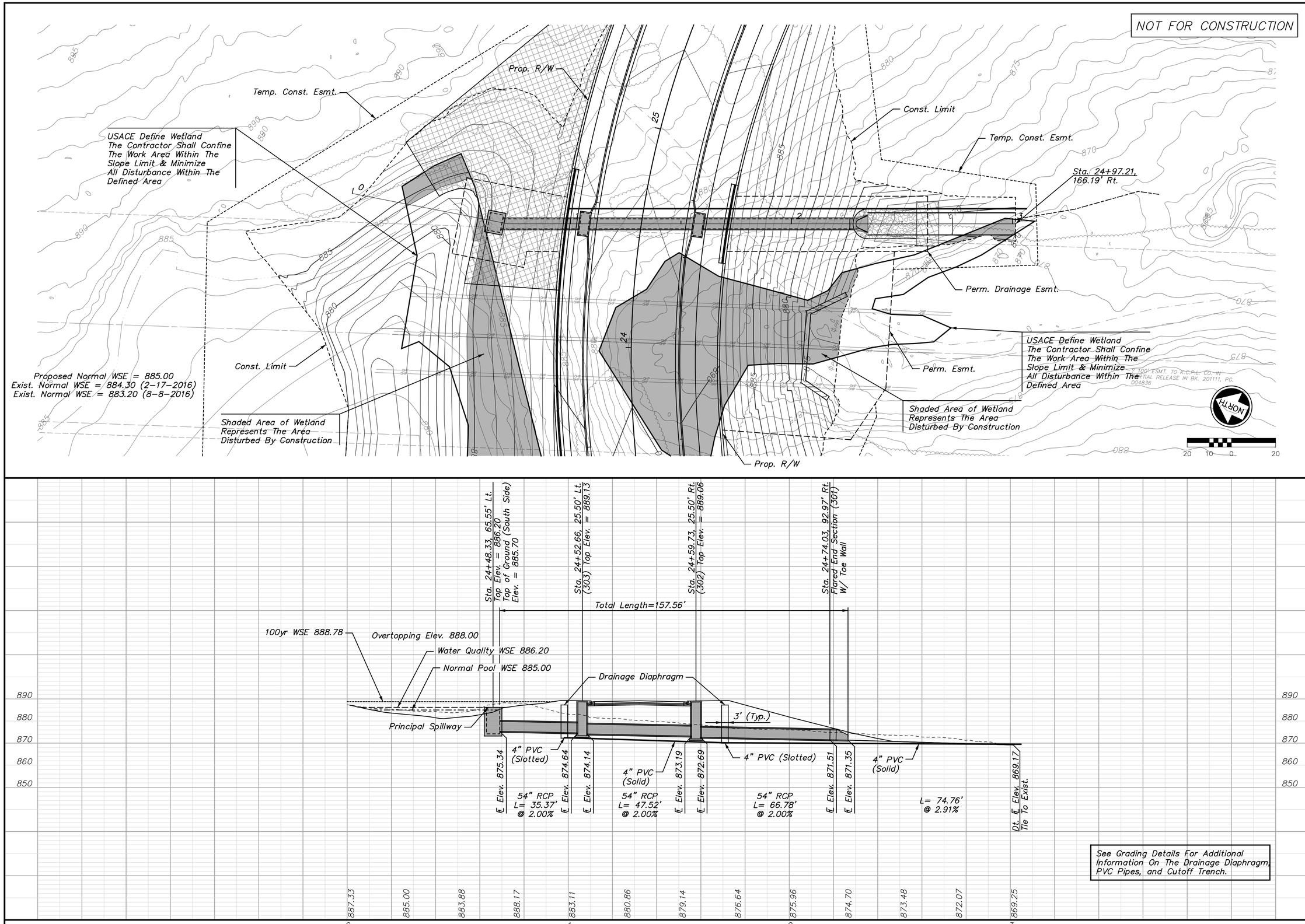

REV.	DATE	REVISIONS	BY	APP'D
5				
4				
3				
2				
1				

Designed By: PRP
Drawn By: JCK/JAA
Checked By: HDL
Issue Date: SEPT. 2016

COPYRIGHT © -2016-SHAFER, KLINE & WARREN INC.

SHAFER, KLINE & WARREN
11250 Corporate Avenue
Lenexa, KS 66219-1392
913.888.7800 FAX: 913.888.7868
SURVEYING | ENGINEERING | CONSTRUCTION

CLEAR CREEK PARKWAY
CITY OF SHAWNEE, KANSAS

CROSS ROAD PIPE PLAN & PROFILE (1)
PIPE AT STATION 24+56.26

150561-010

SHEET NO.
61 OF 182

LAYOUT: MODEL | BY: jadams | DATE: 20-SEP-2016 10:23:52 AM
L:\150561-010_Cad\Civil\Storm Sewer\150561-010_CR-PIPE-01.dgn

NOT FOR CONSTRUCTION

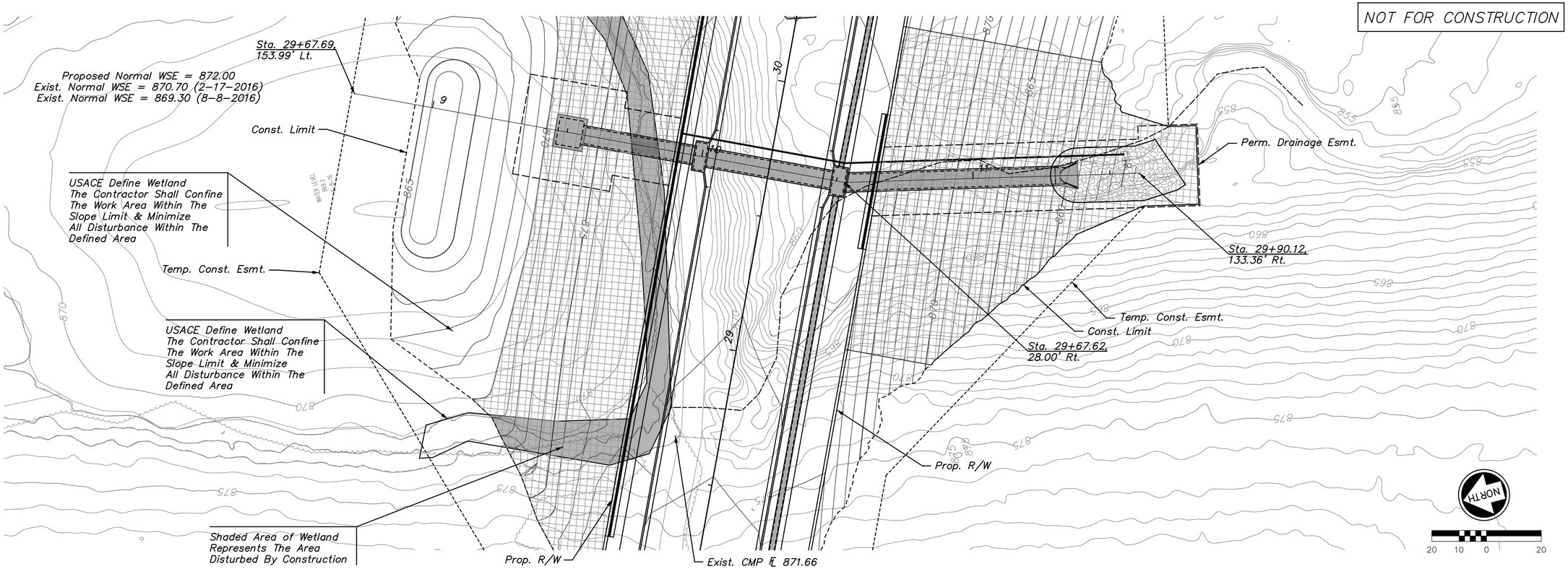

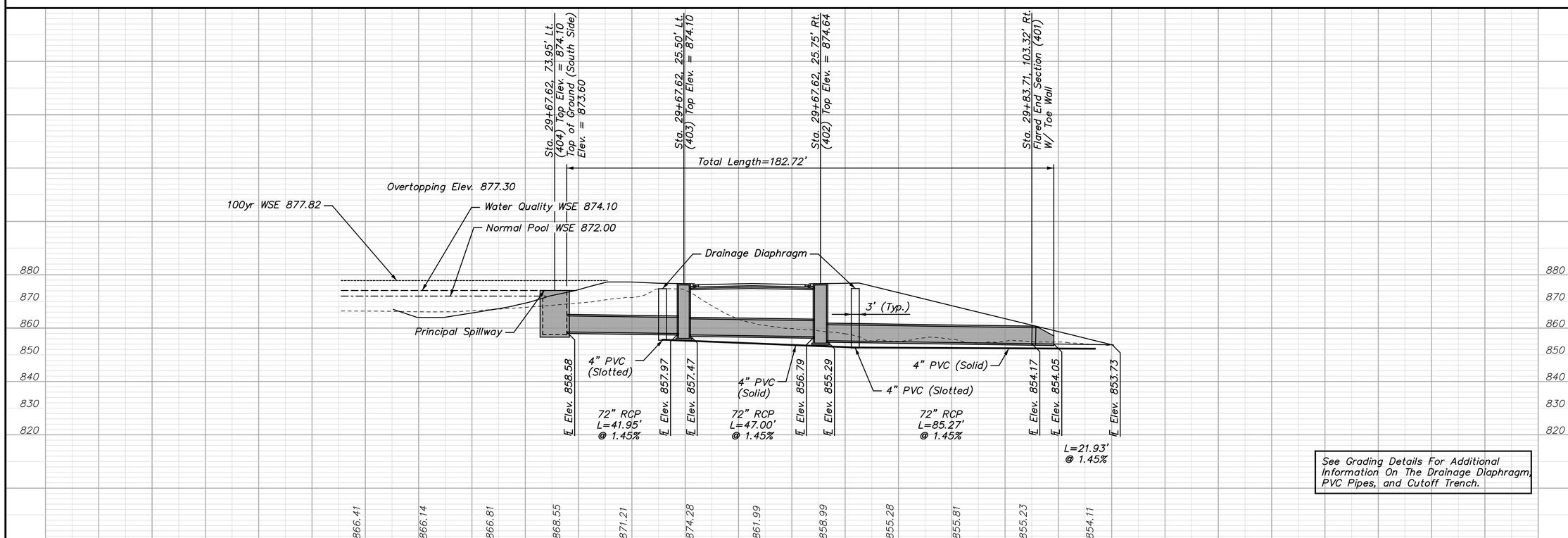

See Grading Details For Additional Information On The Drainage Diaphragm, PVC Pipes, and Cutoff Trench.

REV.	DATE	REVISIONS	BY	APP'D
1				
2				
3				
4				
5				

Designed By: PRP
Drawn By: JCK/JAA
Checked By: HDL
Issue Date: SEPT. 2016

COPYRIGHT © -2016-SHAFER, KLINE & WARREN INC.

SHAFER, KLINE & WARREN
11250 Corporate Avenue
Lenexa, KS 66219-1392
913.888.7800 FAX: 913.888.7868
SURVEYING | ENGINEERING | CONSTRUCTION

CLEAR CREEK PARKWAY
CITY OF SHAWNEE, KANSAS

CROSS ROAD PIPE PLAN & PROFILE (2)
PIPE AT STATION 29+67.62

150561-010

SHEET NO.
62 OF 182

LAYOUT: MODEL | BY: jadams | DATE: 20-SEP-2016 10:23:56 AM
L:\150561-010_Cad\Civil\Storm Sewer\150561-010_CR-PIPE-02.dgn

NOT FOR CONSTRUCTION

Sta. 40+95.28, 89.36' RT (602)
Const. Junction Box (L=10' W=7')
Install 51 LF of 54" RCP
With End Section (S)
Install 36.79 S.Y. of Rip Rap

Sta. 40+93.95,
89.15' Rt.

Temp. Const. Esmt.

Perm. Drainage Esmt.

Sta. 41+37.20,
188.56' Rt.

℄ Clear Creek Parkway

Temp. Const. Esmt.

Sta. 42+47.44, 145.43' LT (603)
Const. 54" End Section
Install 51 LF of 54" RCP (SW)
Install 436.17 S.Y. of Rip Rap

Const. Limit

Prop. R/W

Sta. 42+66.84,
203.20' Lt.

Const. Limit

60" RCP

Sta. 42+51.50,
149.54' Lt.

Sta. 42+42.51,
252.33' Lt.

℄ Gleason Road

Temp. Const. Esmt.

Prop. R/W

Perm. Drainage Esmt.

NORTH

20 10 0 20

Sta. 98+62.67, 62.57' Lt. (601)

Sta. 40+95.28, 89.36' Rt. (602)
Top Elev.=855.00

Sta. 42+46.97, 144.94' Lt.
Flared End Section (603)
W/ Toe Wall

Total Length=322.87'

Max WSE 100yr. = 849.36
Overtopping Elev. 850.51

Prop. Grade

Exist. Ground

Prop. Channel (Typ.)

860 850 840 830 820 810 800

L= 22.46'
@ 6.95%

Dt. ℄ Elev. 839.28
Tie To Exist.

℄ Elev. 840.84

℄ Elev. 840.88

60" RCP
L= 55.85'
@ 0.50%

℄ Elev. 841.12

℄ Elev. 841.34

60" RCP
L= 259.54'
@ 0.50%

℄ Elev. 842.59

℄ Elev. 842.64

Dt. ℄ Elev. 842.70

L= 11.78'
@ 0.50%

L= 87.99'
@ 7.98%

Dt. ℄ Elev. 849.72
Tie To Exist.

840.91 840.65 842.51 841.27 844.21 844.72 845.09 844.50 844.13 846.90 847.88 849.22 849.60 849.74 849.66 848.16 851.91 847.52 849.73 849.73

0 1 2 3 4

REV.	DATE	REVISIONS	BY	APP'D
1				
2				
3				
4				
5				

Designed By: PRP
Drawn By: JCK/JAA
Checked By: HDL
Issue Date: SEPT. 2016

COPYRIGHT © -2016-SHAFER, KLINE & WARREN INC.

SHAFER, KLINE & WARREN
11250 Corporate Avenue
Lenexa, KS 66219-1392
913.888.7800 FAX: 913.888.7868
SURVEYING | ENGINEERING | CONSTRUCTION

CLEAR CREEK PARKWAY
CITY OF SHAWNEE, KANSAS

CROSS ROAD PIPE PLAN & PROFILE (3)
PIPE UNDER ROUNDABOUT

150561-010

SHEET NO.
63 OF 182

LAYOUT: MODEL | BY: jadams | DATE: 20-SEP-2016 10:23:59 AM
L:\150561-010_Cad\Civil\Storm Sewer\150561-010_CR-PIPE-03.dgn

NOT FOR CONSTRUCTION

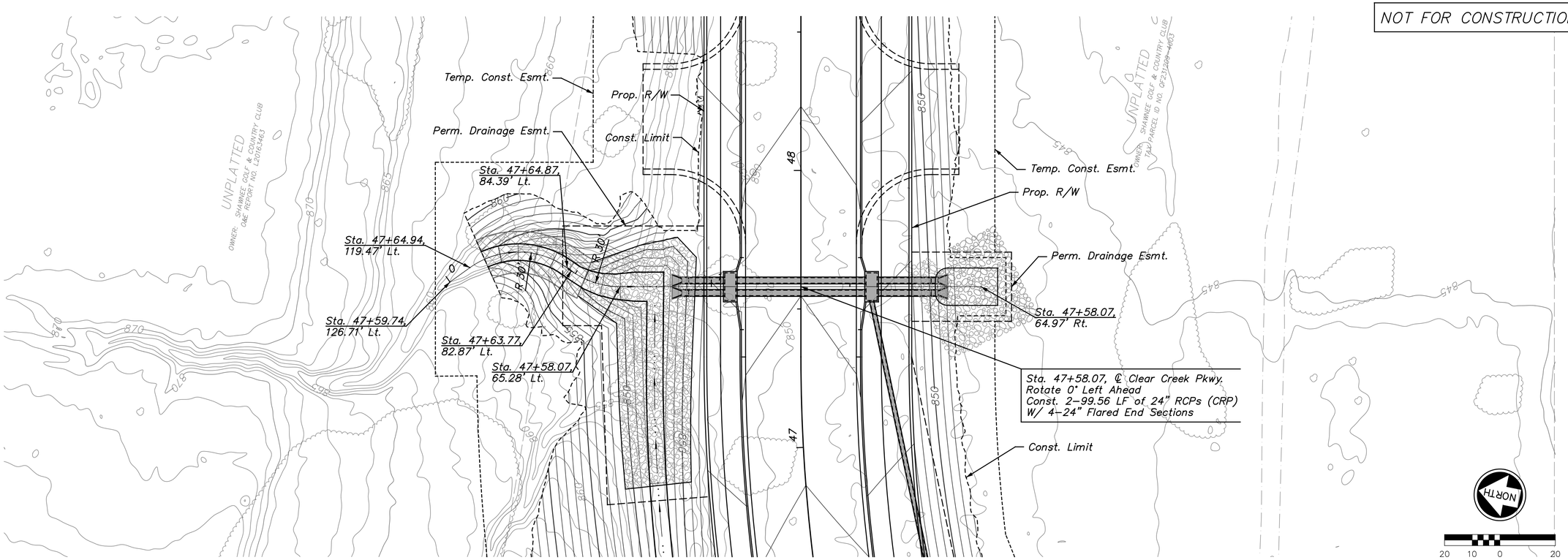

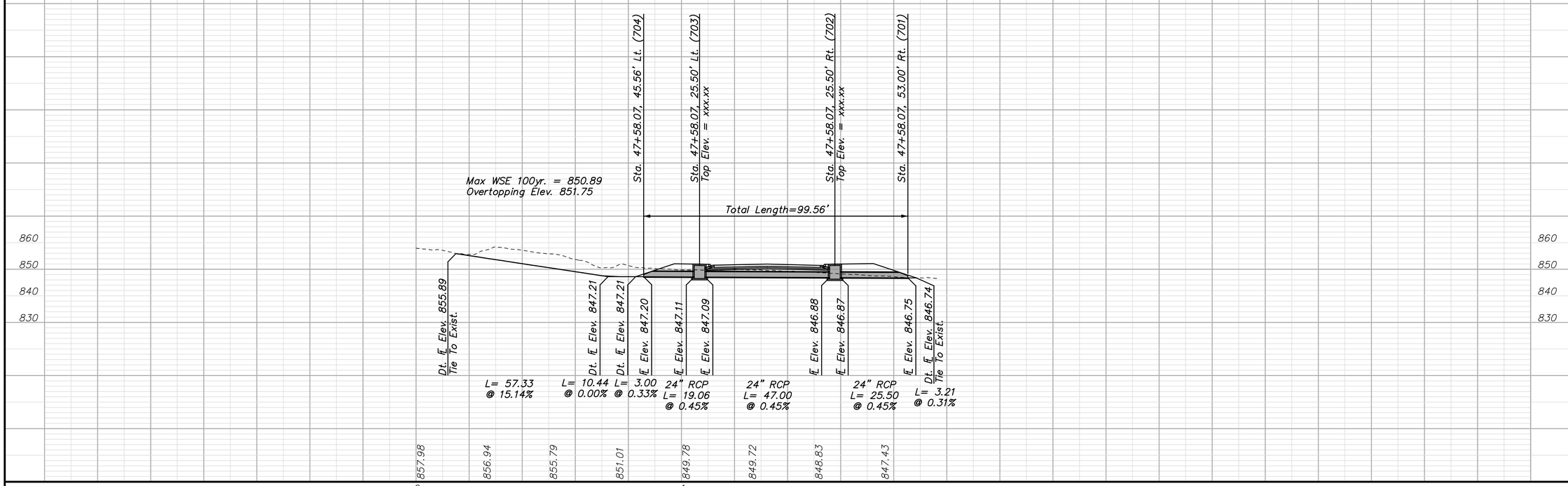

REV.	DATE	REVISIONS	BY	APP'D
1				
2				
3				
4				
5				

Designed By: PRP
Drawn By: JCK/JAA
Checked By: HDL
Issue Date: SEPT. 2016

COPYRIGHT © -2016-SHAFER, KLINE & WARREN INC.

SHAFER, KLINE & WARREN
11250 Corporate Avenue
Lenexa, KS 66219-1392
913.888.7800 FAX: 913.888.7868
SURVEYING | ENGINEERING | CONSTRUCTION

CLEAR CREEK PARKWAY
CITY OF SHAWNEE, KANSAS

CROSS ROAD PIPE PLAN & PROFILE (4)
PIPE AT STATION 47+58.07

150561-010

SHEET NO.
64 OF 182

LAYOUT: MODEL | BY: jadams | DATE: 20-SEP-2016 10:24:02 AM
L:\150561-010_Cad\Civil\Storm Sewer\150561-010_CR-PIPE-04.dgn

NOT FOR CONSTRUCTION

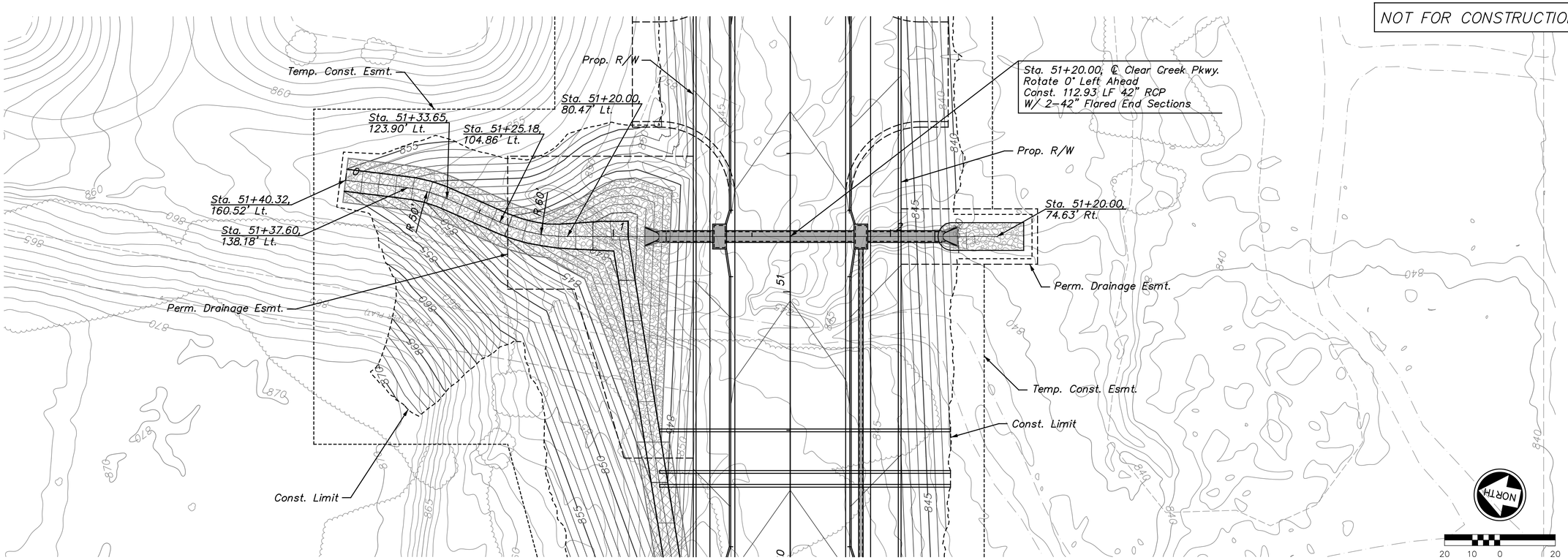

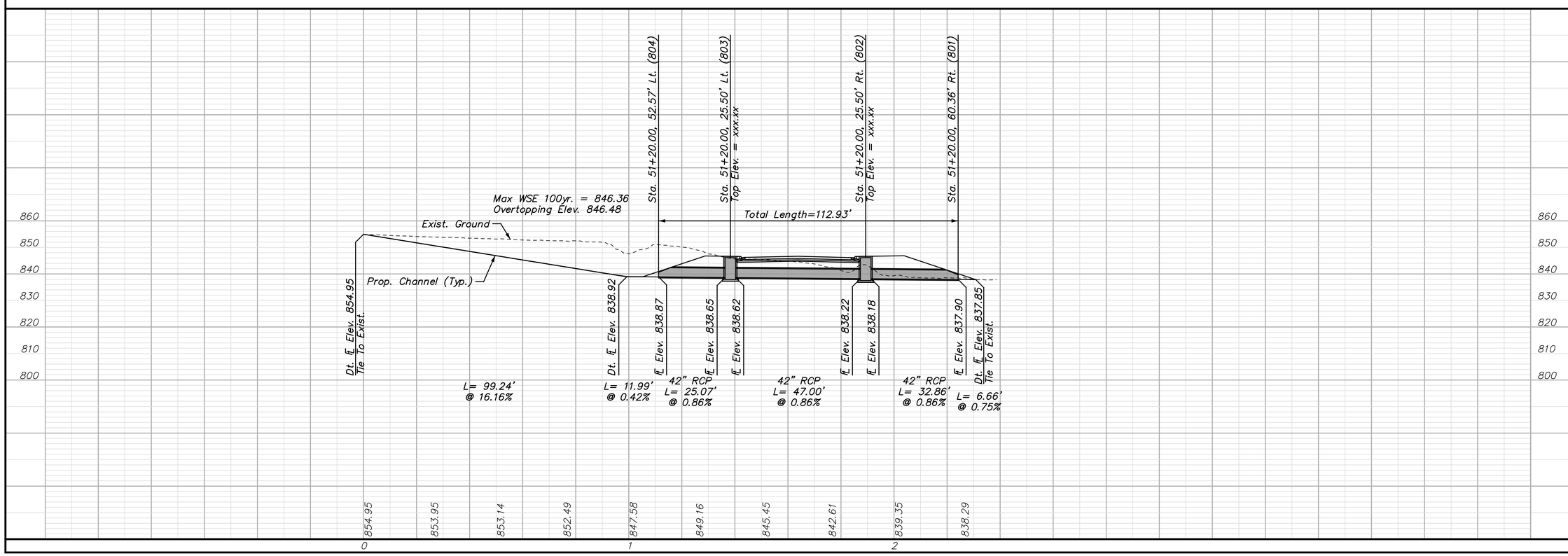

REV.	DATE	REVISIONS	BY	APP'D
5				
4				
3				
2				
1				

Designed By: PRP
Drawn By: JCK/JAA
Checked By: HDL
Issue Date: SEPT. 2016

COPYRIGHT © -2016-SHAFER, KLINE & WARREN INC.

SHAFER, KLINE & WARREN
11250 Corporate Avenue
Lenexa, KS 66219-1392
913.888.7800 FAX: 913.888.7868
SURVEYING | ENGINEERING | CONSTRUCTION

CLEAR CREEK PARKWAY
CITY OF SHAWNEE, KANSAS

CROSS ROAD PIPE PLAN & PROFILE (5)
PIPE AT STATION 51+20.00

150561-010

SHEET NO.
65 OF 182

LAYOUT: MODEL | BY: jadams | DATE: 20-SEP-2016 10:24:05 AM
L:\150561-010_Cad\Civil\Storm Sewer\150561-010_CR-PIPE-05.dgn

NOT FOR CONSTRUCTION

Sta. 60+29.54, Rotate 90° Lt.
Const. 8'x3' RCB (CRP)
W/ 30° Flared Wingwalls & Apron
See RCB Details

Exist. R/W

Perm. Drainage Esmt.

℄ 6' Flat Bottom Ditch
W/ 3:1 Side Slopes

Sta. 60+29.54,
54.88' Rt.

Sta. 0+45.76,
16.26' Lt.

℄ South Cart Path

Replace Existing Cart Path

Sta. 60+29.54,
112.41' Lt.

Sta. 0+43.27,
58.76' Rt.

Temp.
Const.
Esmt.

Const. Limit

Const. Limit

Exist. R/W

Perm Drainage Esmt.

Temp. Const. Esmt.

Golf Course Pond

Sta. 0+45.22, Rotate 91.90° Rt.
Const. 6'x3' 12.24 LF RCB (CRP)
W/ 30° Flared Wingwalls & Apron
See RCB Details

℄ Clear Creek Parkway

Zone AE 1% Annual
Chance Flood (Base Flood)(Typ.)

Zone X–Future 1%
Annual Chance Flood (Typ.)

Prop. R/W

NORTH

20 10 0 20

Max WSE 100yr. = 833.39
Overtopping Elev. = 834.04

Sta. 60+29.54, 52.94' Lt. (904)

Sta. 60+29.54, 25.50' Lt. (903)
Top Elev. = 833.87

Sta. 60+29.54, 25.50' Rt. (902)
Top Elev. = 833.87

Sta. 60+29.54, 54.88' Rt. (901)

VPI Sta. 60+44.93, 251.30' Rt.

Sta. 0+45.77, 16.64' Lt. (1000B)

Sta. 0+44.93, 8.64' Rt. (1000A)

Total Length=106.27'

Max WSE 100yr. = 824.34
Overtopping Elev. 823.39

Total Length
=25.3'

Exist. Ground

Proposed Channel (Typ.)

℄ South Cart Path

4:1

99.94' Lt.
Tie To Exist.

Dt. ℄ Elev. 828.41

℄ Elev. 827.77

L= 9.99'
@ 6.41%

8'x3'
RCB
L= 23.88'
@ 0.30%

℄ Elev. 827.69

℄ Elev. 827.68

8'x3' RCB
L= 47.00'
@ 0.30%

℄ Elev. 827.54

℄ Elev. 827.53

8'x3'
RCB
L= 27.39'
@ 0.30%

℄ Elev. 827.45

Dt. ℄ Elev. 827.41

L= 5.24'
@ 0.75%

L= 197.02'
@ 0.75%

Dt. ℄ Elev. 825.97

L= 78.15'
@ 5.00%

Dt. ℄ Elev. 822.06

℄ Elev. 821.73

L= 6.35'
@ 5.19%

L= 25.30'
@ 1.00%

℄ Elev. 821.48

Dt. ℄ Elev. 821.40

L= 8.29'
@ 1.00%

6'x3' RCB
L= 50.14'
@ 1.00%

Dt. ℄ Elev. 820.98
Tie To Exist.

840 830 820 810 800 790

838.60 837.63 836.90 836.21 835.45 835.31 835.07 832.90 831.75 831.35 830.82 830.47 830.98 832.12 832.98 833.32 832.96 831.15 824.08 823.05 822.67 821.75

0 1 2 3 4 5

LAYOUT: MODEL | BY: jadams | DATE: 20-SEP-2016 10:24:08 AM
L:\150561-010_Cad\Civil\Storm Sewer\150561-010_CR-PIPE-06.dgn

REV.	DATE	REVISIONS	BY	APP'D
5				
4				
3				
2				
1				

Designed By: PRP
Drawn By: JCK/JAA
Checked By: HDL
Issue Date: SEPT. 2016

COPYRIGHT © -2016-SHAFER, KLINE & WARREN INC.

SHAFER, KLINE & WARREN
11250 Corporate Avenue
Lenexa, KS 66219-1392
913.888.7800 FAX: 913.888.7868
SURVEYING | ENGINEERING | CONSTRUCTION

CLEAR CREEK PARKWAY
CITY OF SHAWNEE, KANSAS

CROSS ROAD PIPE PLAN & PROFILE (6)
PIPE AT STATION 60+29.54

150561-010

NOT FOR CONSTRUCTION

Note: Form Liner shall be Fitzgerald Pattern 16986, Georgetown Ashlar or Approved Equal. Form Liner Used On Top 4' of Both Pond Outlet Structures.

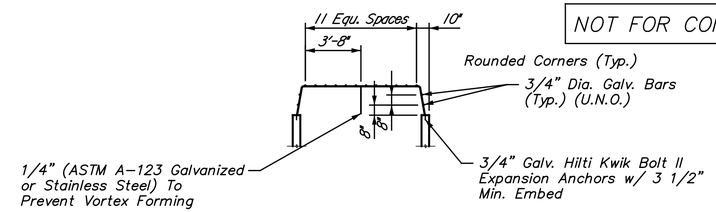

8'x6' Pond Outlet Structure
Trash Rack Detail
Section B-B

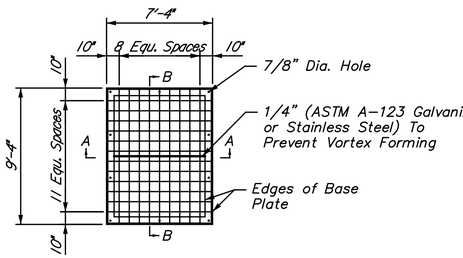

8'x6' Pond Outlet Structure
Trash Rack Plan

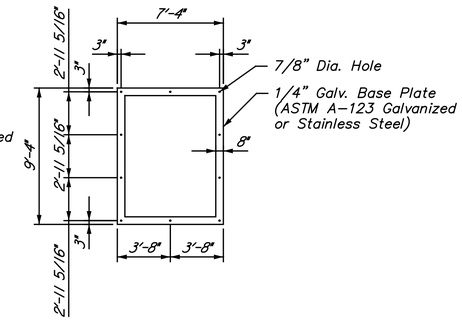

8'x6' Pond Outlet Structure
Trash Rack Base Plate Detail

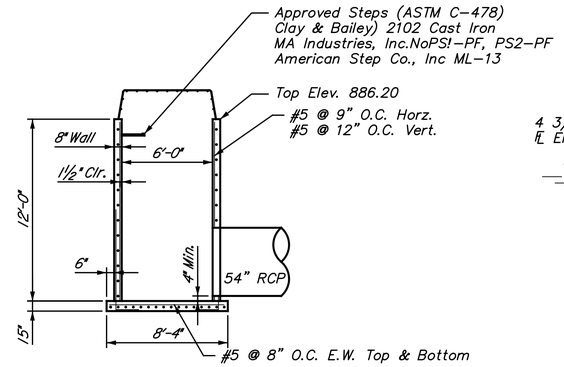

8'x6' Pond Outlet Structure
Section A-A

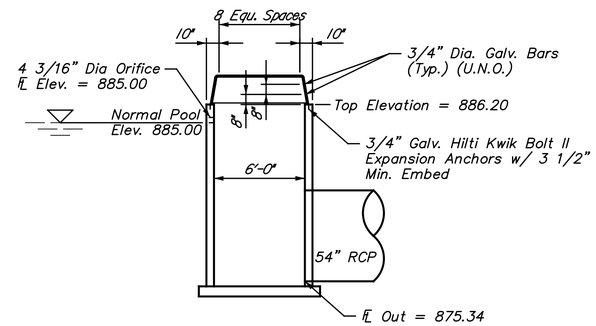

8'x6' Pond Outlet Structure
Trash Rack Detail
Section A-A

8'x6' West Pond Outlet Structure Details (304)

Not To Scale

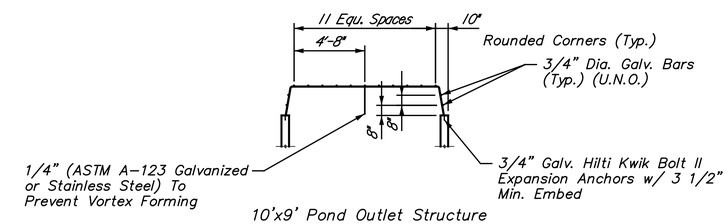

10'x9' Pond Outlet Structure
Trash Rack Detail
Section B-B

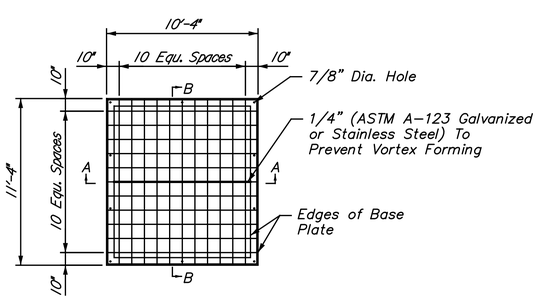

10'x9' Pond Outlet Structure
Trash Rack Plan

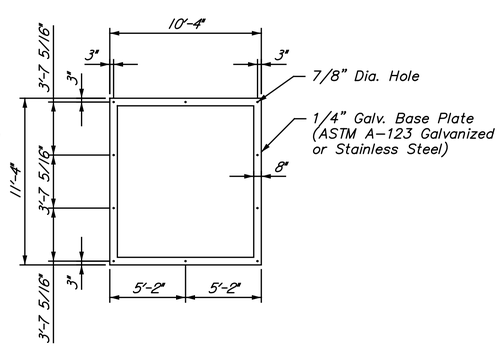

10'x9' Pond Outlet Structure
Trash Rack Base Plate Detail

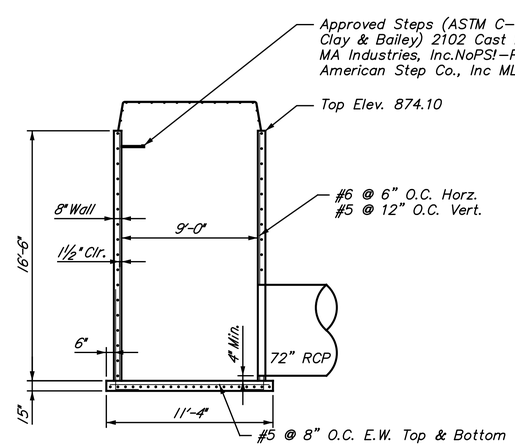

10'x9' Pond Outlet Structure
Section A-A

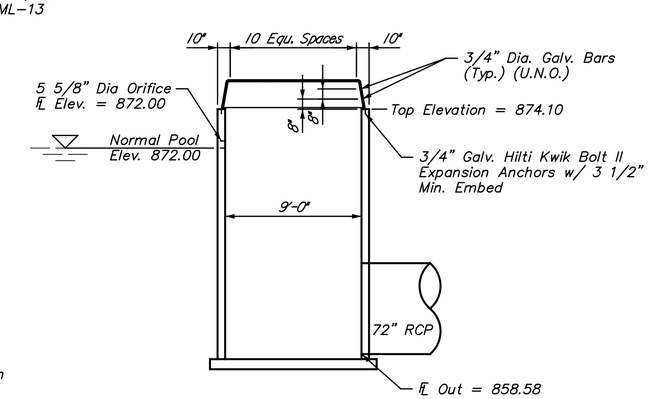

10'x9' Pond Outlet Structure
Trash Rack Detail
Section A-A

10'x9' East Pond Outlet Structure Details (404)

Not To Scale

REV.	DATE	REVISIONS	BY	APP'D
5				
4				
3				
2				
1				

Designed By: PRP
Drawn By: JCK/JAA
Checked By: HDL
Issue Date: SEPT. 2016

COPYRIGHT © -2016-SHAFER, KLINE & WARREN INC.

SHAFER, KLINE & WARREN
11250 Corporate Avenue
Lenexa, KS 66219-1392
913.888.7800 FAX: 913.888.7868
SURVEYING | ENGINEERING | CONSTRUCTION

CLEAR CREEK PARKWAY
CITY OF SHAWNEE, KANSAS

POND OUTLET STRUCTURE DETAILS (1)

150561-010

LAYOUT: MODEL BY: jadams DATE: 20-SEP-2016 10:24:11 AM
L:\150561-010_Cad\Civil\Storm Sewer\150561-010_INLET-DET-01.dgn

NOT FOR CONSTRUCTION

Drainage Structure Special Design Information																				
Structure Information										Top Slab			Walls					Bottom Slab		
						Dimensions				Thickness	Reinforcing Steel		Thickness	Reinforcing Steel		Reinforcing Steel		Thickness	Reinforcing Steel	
Structure Number	Type	Station	Offset	Side	Name	Length	Width	Height	Top Elevation	Thickness TS	Bar Size	Center To Center Bar Spacing	Thickness TW	Horz. Bar Size	Center To Center Bar Spacing	Vert. Bar Size	Center To Center Bar Spacing	Thickness TB	Bar Size	Center To Center Bar Spacing
SN	SNtype	SNs	SNo	SNs	Sname	SNl	SNw	SNh	SNte	TS	TSs	TSsp	TW	TWhs	TWhsp	TWvs	TWvsp	TB	TBs	TBsp
#	#	stations	feet	text	text	feet	feet	feet	feet	inches	#	inches	inches	#	inches	#	inches	inches	#	inches
304	Outlet Control Structure	24+48.33	65.55	Lt	Clear Creek Pkwy	8.00	6.00	12.00	886.20	N/A	N/A	N/A	8	5	9	5	12	15	5 EF	8
303	Curb Inlet	24+52.66	25.50	Lt	Clear Creek Pkwy	10.00	4.00	16.00	889.13	8	5	12	8	6	6	5	12	15	5 EF	8
302	Curb Inlet	24+59.73	25.50	Rt	Clear Creek Pkwy	10.00	4.00	17.50	889.06	8	5	12	8	6	6	5	12	15	5 EF	8
404	Outlet Control Structure	29+67.62	73.95	Lt	Clear Creek Pkwy	10.00	9.00	16.50	874.10	N/A	N/A	N/A	8	6	6	5	12	15	5 EF	8
403	Curb Inlet	29+67.62	25.50	Lt	Clear Creek Pkwy	10.00	4.00	20.50	876.64	8	5	12	8	6	6	5	12	15	5 EF	8
402	Curb Inlet	29+67.62	25.75	Rt	Clear Creek Pkwy	10.00	4.50	22.50	876.64	8	5	12	8	6	6	5	12	15	5 EF	8
602	Junction Box	40+95.28	89.36	Rt	Clear Creek Pkwy	10.00	7.00	15.00	855.00	8	5	12	8	6	8	5	12	15	5 EF	8

Notes: At RCP Openings, Place 1/2 of All Reinforcing Steel Interrupted by the Opening on Edge of the Opening. Minimum Spacing Between Reinforcing Steel Shall be 3 Inches.

Abbreviations: EF = Each Face EW = Each Way IF = Inside Face OF = Outside Face

Notes:

1. Information for Canyon Lakes future storm structures was obtained from coordination plans provided by Phelps Engineering, Inc. (PEI).
2. Canyon Lakes future structures were included in the analysis to assess and plan for the future impacts to Clear Creek Parkway's drainage system.
3. Lengths of pipe shown on the plans, profiles and calculations sheets are based on lineal feet measurements along pipe centerline from the structure inside face to structure inside face.
4. Lengths of pipe shown on the Summary Of Storm Drainage Quantities and Quantity Recapitulation sheets are based on lineal feet measurements along pipe centerline from the structure inside face to structure inside face rounded up to the nearest foot.

REV.	DATE	REVISIONS	BY	APP'D
1				
2				
3				
4				
5				

COPYRIGHT © -2016-SHAFER, KLINE & WARREN INC.

Designed By: PRP
Drawn By: JCK/JAA
Checked By: HDL
Issue Date: SEPT. 2016

SHAFER, KLINE & WARREN
11250 Corporate Avenue
Lenexa, KS 66219-1392
913.888.7800 FAX: 913.888.7868
SURVEYING | ENGINEERING | CONSTRUCTION

CLEAR CREEK PARKWAY
CITY OF SHAWNEE, KANSAS

SUMMARY OF SPECIAL STUCTURES

150561-010

LAYOUT: MODEL | BY: jadams | DATE: 20-SEP-2016 10:24:14 AM
L:\150561-010_Cad\Civil\Storm Sewer\150561-010_INLET-DET-02.dgn

NOT FOR CONSTRUCTION

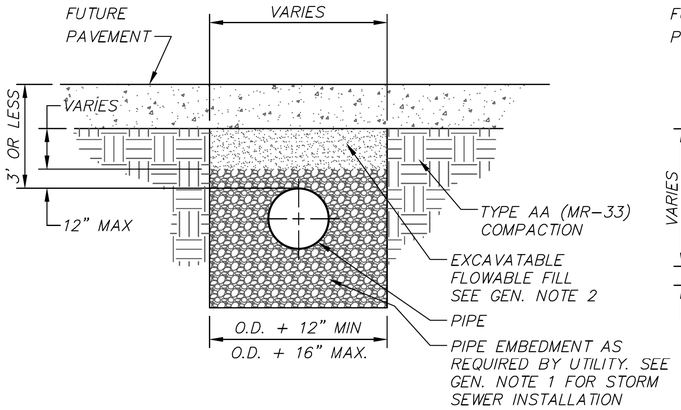

FILL CONDITION EQUAL TO OR LESS THAN 3'

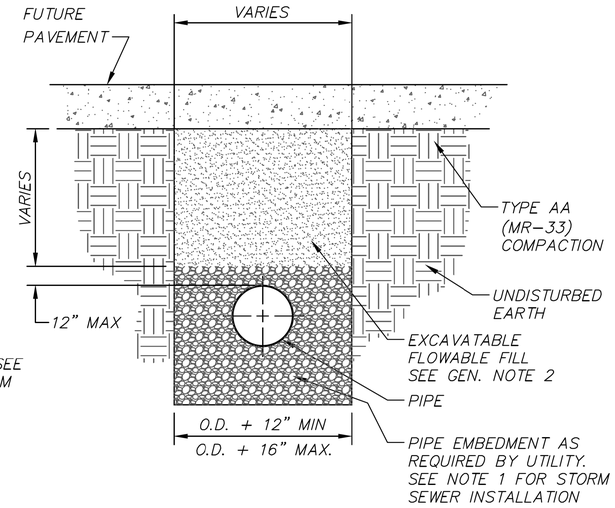

TRENCH IN A CUT CONDITION

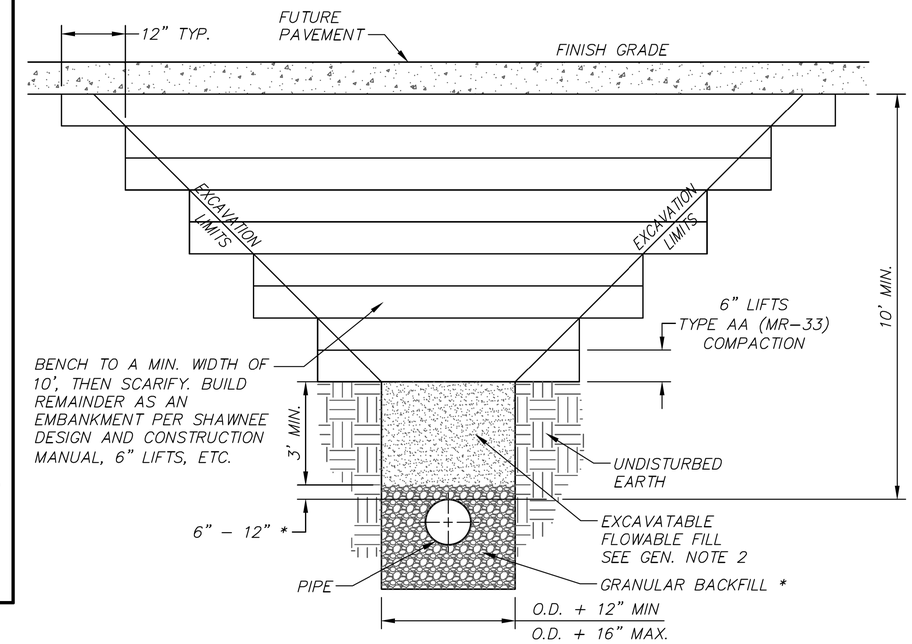

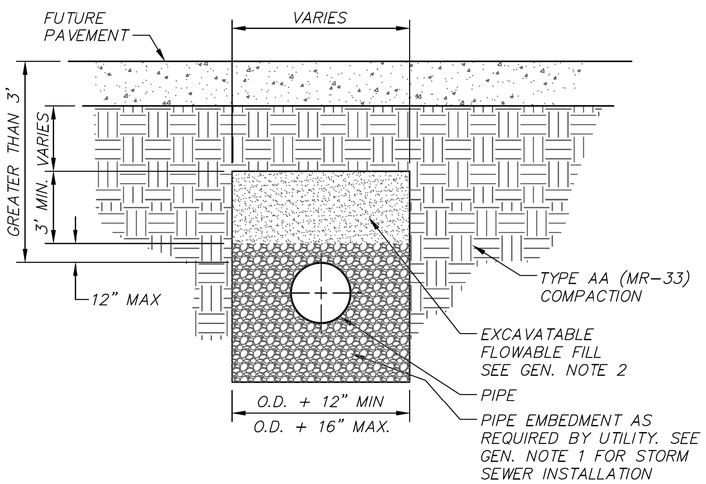

FILL CONDITION GREATER THAN 3'

GENERAL NOTES:

1. FOR STORM SEWER INSTALLATION PIPE EMBEDMENT SHALL BE FILLED NO HIGHER THEN THE PIPE SPRINGLINE ELEVATION.
2. FLOWABLE FILL SHALL MEET REQUIREMENTS AS SHOWN IN SECTION 4410 OF THE SHAWNEE DESIGN AND CONSTRUCTION MANUAL.
3. PIPE SHALL BE INSTALLED IN A TRENCH CONDITION. FILL AREA SHALL BE BROUGHT UP TO A MINIMUM OF 2' ABOVE THE TOP OF PIPE THEN TRENCH SHALL BE EXCAVATED TO INSTALL PIPE.
4. SHAWNEE DESIGN AND CONSTRUCTION MANUAL, THE MANUAL ON UNIFORM TRAFFIC CONTROL DEVICES, AND THE STANDARD SPECIFICATIONS FOR STATE ROAD AND BRIDGE CONSTRUCTION, KANSAS DEPARTMENT OF TRANSPORTATION, AND SPECIAL PROVISIONS ARE INCORPORATED EXCEPT AS OTHERWISE NOTED.
5. ANY EXCAVATION LEFT OPEN OVERNIGHT SHALL BE SECURED W/ ORANGE CONSTRUCTION FENCING.

STREET CROSSING DETAILS FOR ALL UTILITIES

NOTES:

1. CONTRACTOR SHALL CONTACT THE CITY FOR INSPECTION PRIOR TO PLACING BACKFILL AND AGAIN PRIOR TO PLACING ASPHALT.
2. THE 1.0' EITHER SIDE OF ORIGINAL TRENCH SHALL NOT BE REMOVED UNTIL BACKFILL HAS BEEN PLACED AND COMPACTED.
3. EARTH BACKFILL IS ONLY ALLOWABLE WITHIN UNPAVED AREAS WITHIN THE RIGHT-OF-WAY, WITHIN DRAINAGE EASEMENTS, AND IN ACCORDANCE WITH THIS DETAIL. BACKFILL MATERIAL OR TAMPED PIPE EMBEDMENT SHALL CONFORM TO THE SHAWNEE DESIGN AND CONSTRUCTION MANUAL, SECTION 4115 – EARTHWORK. ON-SITE OR IMPORTED MATERIAL TO BE USED AS BACKFILL SHALL BE FREE OF MUCK, FROZEN MATERIAL, EXCESS MOISTURE, ORGANIC MATERIAL, TOPSOIL RUBBISH, CONSTRUCTION DEBRIS, AND ROCK LARGER THAN 3 INCHES IN DIAMETER. FLOWABLE FILL IS REQUIRED TO BE USED AS BACKFILL BENEATH ALL PAVEMENT AND FUTURE PAVEMENT WITHIN THE RIGHT-OF-WAY, SIDEWALKS AND RECREATIONAL TRAILS. PLACEMENT OF FLOWABLE FILL SHALL CONFORM TO THE SHAWNEE DESIGN AND CONSTRUCTION MANUAL, SECTION 4510 – FLOWABLE FILL. THE CONTRACTOR SHALL ASSURE THAT THE PIPE EMBEDMENT AND BACKFILL OF THE PIPE SHALL BE DONE IN THE PRESENCE OF THE CITY ENGINEER OR REPRESENTATIVE.
4. ALL PIPES SHALL BE INSPECTED PRIOR TO BACKFILL. ALL PIPE COVERED PRIOR TO INSPECTION SHALL BE UNCOVERED AT THE CONTRACTOR'S EXPENSE.
5. UNLESS OTHERWISE AUTHORIZED BY THE CITY ENGINEER; TRENCH BACKFILL IN AREAS OF FUTURE STREET CONSTRUCTION SHALL CONFORM TO THIS DETAIL. BACKFILL LIMITS FOR THIS DETAIL EXTEND TO THE TOP OF TRENCH AND 3 FT. BACK OF ALL CURBS, AND UNDER ANY SIDEWALKS, EXISTING OR PROPOSED.
6. ALL CONSTRUCTION AND MATERIALS SHALL CONFORM TO THE CITY OF SHAWNEE DESIGN AND CONSTRUCTION MANUAL.
7. TRENCH WIDTHS IN EXCESS OF 3' WIDE MAY BE COMPACTED USING SELECT EXCAVATED MATERIALS. FOR COMPACTION OF COHESIVE SOILS SUCH AS CLAY, A SHEEPSFOOT ROLLER SHALL BE USED TO BLEND AND BOND THE SOILS. ALL BACKFILLING OPERATIONS SHALL CONFORM TO THE SHAWNEE DESIGN AND CONSTRUCTION MANUAL, SECTION 4115 – BACKFILLING FOR STRUCTURES.
8. WHERE SELECT EXCAVATED MATERIAL IS USED FOR MATERIAL, THE CONTRACTOR SHALL SUBMIT DENSITY TESTS AS REQUIRED BY THE CITY ENGINEER.

SANITARY / STORM CROSSINGS (DEEP FILL)

Date	Revision	By	Appr.

STREET CROSSING AND SANITARY / STORM CROSSING DETAILS FOR NEW INFRASTRUCTURE

DEVELOPMENT SERVICES

Good Starts Here — SHAWNEE KANSAS

DATE:	3-1-14	3202-3
DRAWN BY:	MRS	
CHECKED BY:	RL	SHEET 1 OF 1

REV.	DATE	REVISIONS	BY	APP'D
5				
4				
3				
2				
1				

Designed By: PRP
Drawn By: JCK/JAA
Checked By: HDL
Issue Date: SEPT. 2016

COPYRIGHT © -2016-SHAFER, KLINE & WARREN INC.

SHAFER, KLINE & WARREN
11250 Corporate Avenue
Lenexa, KS 66219-1392
913.888.7800 FAX: 913.888.7868
SURVEYING | ENGINEERING | CONSTRUCTION

CLEAR CREEK PARKWAY
CITY OF SHAWNEE, KANSAS

DRAINAGE DETAILS (1)

150561-010

LAYOUT: MODEL | BY: jadams | DATE: 20-SEP-2016 10:24:24 AM
L:\150561-010_Civil\Civil\Storm Sewer\150561-010_DRAIN-DET-01.dgn

HANDRAIL NOTES:

1. ALL RAILS AND POSTS SHALL BE SQUARE TUBING 2" NOMINAL PIPE AND SHALL BE GALVANIZED & PAINTED WITH 2 COATS OF "FOREST GREEN" PAINT. COLOR SHALL BE SUBMITTED TO CITY ENGINEER FOR APPROVAL PRIOR TO USE.
2. FABRICATION AND ERECTION SHALL BE IN ACCORDANCE WITH THE AISC MANUAL OF STEEL CONSTRUCTION.
3. ALL SHOP AND FIELD WELDING SHALL CONFORM TO AWS STRUCTURAL WELDING CODE STEEL, ANSI/AWS 01.1.
4. ALL WELDING SHALL BE DONE BY AWS CERTIFIED WELDERS HAVING CURRENT CERTIFICATION IN TYPE OF WELD SHOWN ON THE DRAWINGS OR NOTES.
5. THE HANDRAIL HEIGHT SHALL MEET ADA REQUIREMENTS.

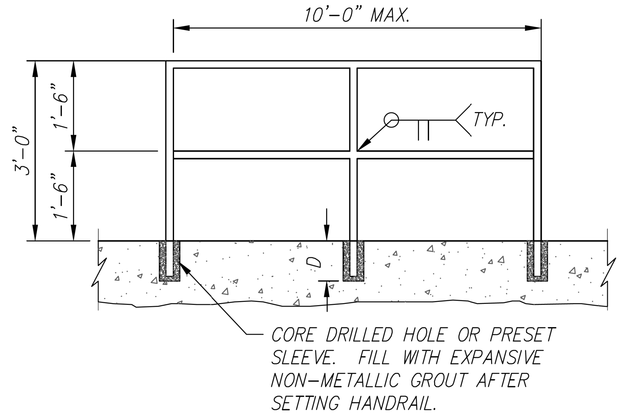

HANDRAIL SECTION (TYP.)

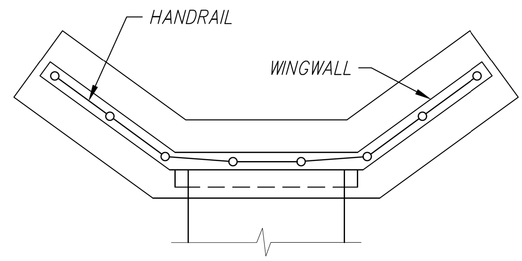

ABUTMENT PLAN

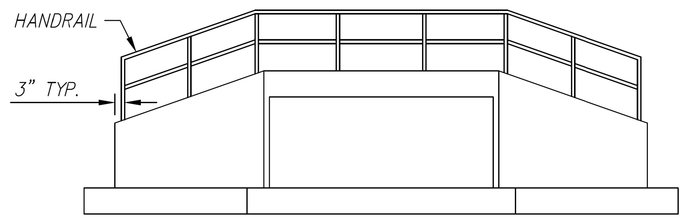

ABUTMENT ELEVATION
AT STREAM FACE

Date	Revision	By	Appr
3-1-14	SHAWNEE DESIGN & CONSTRUCTION MANUAL REVISIONS	MRS	PJL
8-21-12	REVISED TO MATCH CONSTRUCTION SPECIFICATION REVISIONS	MRS	PJL

HANDRAIL
(CULVERT HEADWALL & WINGWALLS)

DEVELOPMENT SERVICES

SHAWNEE KANSAS

DATE:	08-27-2007	3620-3
DRAWN BY:	MRS	
CHECKED BY:	PJL	SHEET 1 OF 1

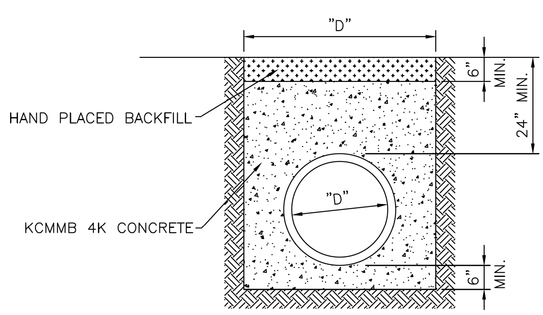

CONCRETE ENCASEMENT
CLASS A

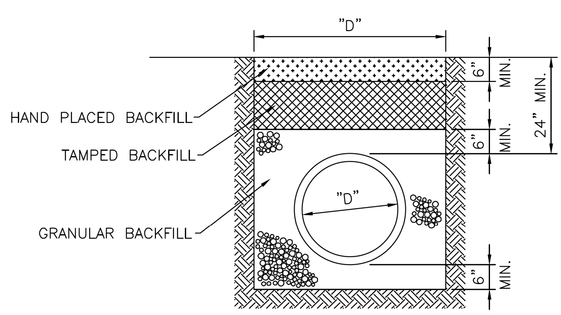

HPPP/HDPE/PVC PIPE BEDDING
CLASS C

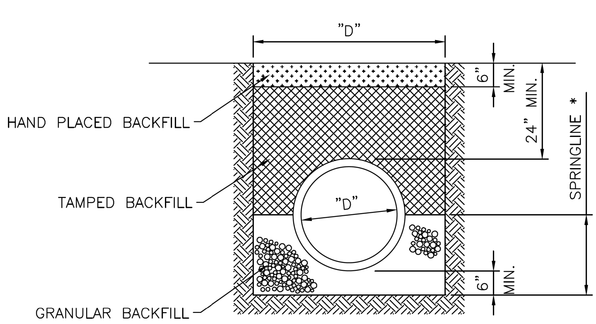

FIRST CLASS BEDDING (RCP)
CLASS B

NOTES:

1. GRANULAR FILL SHALL BE AS SHOWN IN TABLE, AND SHALL BE PLACED IN 6" LIFTS AND UNIFORMLY COMPACTED.
2. TAMPED FILL SHALL BE SUITABLE FINE GRADED SOIL, FREE OF DEBRIS, ORGANIC MATERIAL, AND STONES, COMPACTED TO TYPE AA MR-33 COMPACTION.
3. HAND PLACED FILL SHALL BE SUITABLE FINE GRADED TOP-SOIL MATERIAL, FREE OF DEBRIS AND STONES, COMPACTED TO TYPE AA MR-33 COMPACTION.
4. ALL PIPE SHALL BE INSPECTED PRIOR TO BACKFILL. ALL PIPE COVERED PRIOR TO INSPECTION SHALL BE UNCOVERED AT THE CONTRACTORS EXPENSE.
5. IF FLOWABLE FILL IS REQUIRED, SEE SHAWNEE DESIGN AND CONSTRUCTION MANUAL FOR INFORMATION.

* RCP INSTALLED IN ROCK CONDITIONS SHALL BE BACKFILLED W/ GRANULAR BACKFILL UP TO THE SPRINGLINE OF THE PIPE.

GRANULAR BACKFILL GRADATION

Sieve	% Retained
1"	100
3/4"	90-100
3/8"	20-65
#4	0-25

TRENCH WIDTH "D" TABLE

Pipe Size (inches)	Minimum Side Wall Clearance (inches)
12 - 30	6
33 - 42	9
48 - 60	12
66 - 90	18
96 - 108	24

Date	Revision	By	Appr
3-1-14	SHAWNEE DESIGN & CONSTRUCTION MANUAL REVISIONS	MRS	PJL
8-21-12	REVISED TO MATCH CONSTRUCTION SPECIFICATION REVISIONS	MRS	PJL

PIPE BEDDING

DEVELOPMENT SERVICES

SHAWNEE KANSAS

DATE:	03-12-2012	3305-4
DRAWN BY:	MRS	
CHECKED BY:	PJL	SHEET 1 OF 1

NOT FOR CONSTRUCTION

CLEAR CREEK PARKWAY
CITY OF SHAWNEE, KANSAS

DRAINAGE DETAILS (2)

SHAFER, KLINE & WARREN
11250 Corporate Avenue
Lenexa, KS 66219-1392
913.888.7800 FAX: 913.888.7868
SURVEYING | ENGINEERING | CONSTRUCTION

Designed By: PRP
Drawn By: JCK/JAA
Checked By: HDL
Issue Date: SEPT. 2016

REV.	DATE	REVISIONS	BY	APP'D
5				
4				
3				
2				
1				

COPYRIGHT © -2016-SHAFER, KLINE & WARREN INC.

NOT FOR CONSTRUCTION

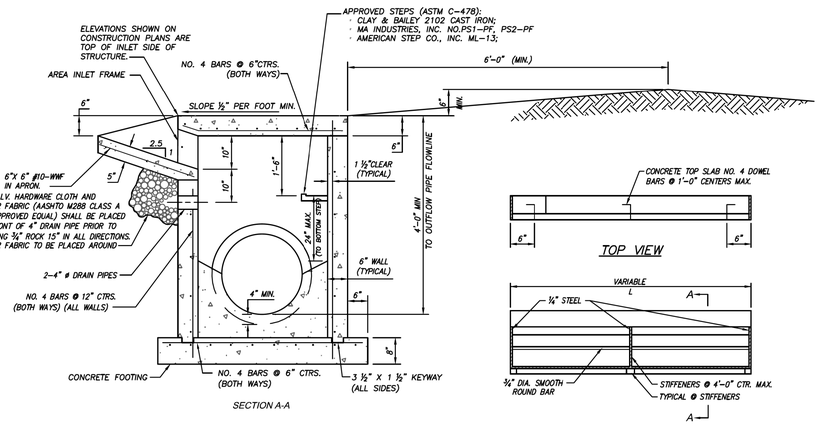

AREA INLET

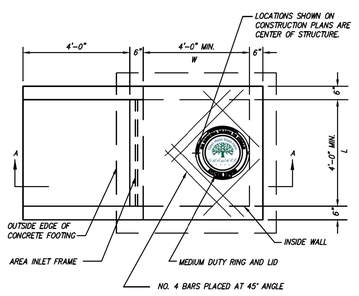

PLAN

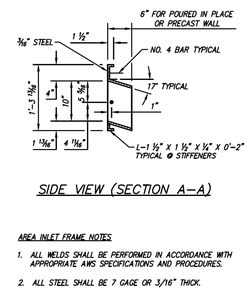

SIDE VIEW (SECTION A-A)

AREA INLET FRAME NOTES:

1. ALL WELDS SHALL BE PERFORMED IN ACCORDANCE WITH APPROPRIATE AWS SPECIFICATIONS AND PROCEDURES.
2. ALL STEEL SHALL BE 7 GAGE OR 3/16" THICK.
3. ALL WELDS ON EXPOSED SURFACES SHALL BE DRESSED SO AS TO PROVIDE A PLEASING FINISHED APPEARANCE.
4. THE ENTIRE FRAME SHALL BE HOT DIP ZINC COATED IN ACCORDANCE WITH ASTM A-123.

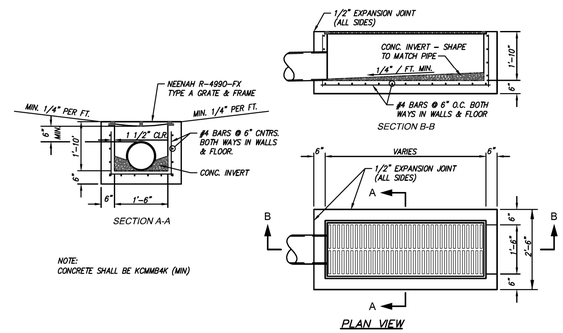

TRENCH DRAIN

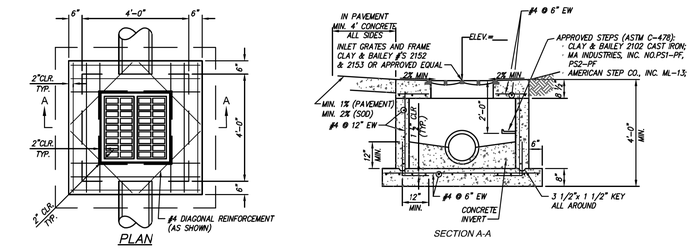

GRATE INLET

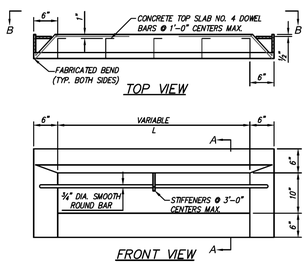

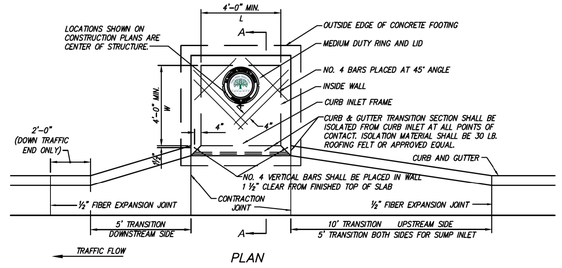

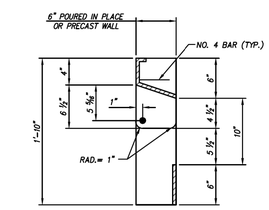

SIDE VIEW (SECTION A-A)

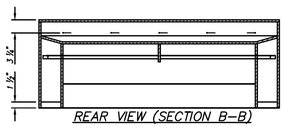

REAR VIEW (SECTION B-B)

STEEL INLET FRAME NOTES:

1. ALL WELDS SHALL BE PERFORMED IN ACCORDANCE WITH APPROPRIATE AWS SPECIFICATIONS AND PROCEDURES.
2. ALL STEEL SHALL BE 7 GAGE OR 3/16" THICK.
3. ALL WELDS ON EXPOSED SURFACES SHALL BE DRESSED SO AS TO PROVIDE A PLEASING FINISHED APPEARANCE.
4. THE ENTIRE FRAME SHALL BE HOT DIP ZINC COATED IN ACCORDANCE WITH ASTM A-123.

INLET GENERAL NOTES

GENERAL

1. ALL STORM SEWER STRUCTURES SHALL BE PRECAST OR POURED IN PLACE. TOPS SHALL BE POURED IN PLACE AND WALL STEEL SHALL BE LEFT EXPOSED TO A HEIGHT 2" BELOW THE FINISH TOP ELEVATION, OR AS DIRECTED BY THE CITY ENGINEER.
2. PRECAST SHOP DRAWINGS ARE TO BE APPROVED BY THE CITY ENGINEER (OR REPRESENTATIVE THEREOF) FOR PUBLICLY FINANCED OR ADMINISTERED PROJECTS. PRECAST SHOP DRAWINGS FOR PRIVATELY FINANCED PROJECTS ARE TO BE SUBMITTED TO THE ENGINEER.
3. DO NOT SCALE THESE DRAWINGS FOR DIMENSIONS OR CLEARANCES. ANY QUESTIONS REGARDING DIMENSIONS SHALL BE BROUGHT TO THE ATTENTION OF THE ENGINEER PRIOR TO CONSTRUCTION.
4. THE FIRST DIMENSION LISTED IN THE CONSTRUCTION NOTES IS THE "L" DIMENSION. THE SECOND DIMENSION IS THE "W" DIMENSION. THE CONCRETE THICKNESS AND REINFORCEMENT SHOWN IS FOR BOXES WITH ("L"+"W") AND ("W"+"W") LESS THEN OR EQUAL TO 20. FOR BOXES WITH EITHER OF THESE CALCULATIONS GREATER THAN 20, A SPECIAL DESIGN IS REQUIRED.
5. RING & COVER TO BE EAST JORDAN IRON WORKS #00150132, NEENAH #2016 OR APPROVED EQUAL.
6. INLET TOPS SHALL BE SLOPED WITH CURB PROFILE.

CONCRETE

7. CONCRETE USED IN THIS WORK SHALL BE KCMMB4K FOR ALL PRECAST STRUCTURAL COMPONENTS, AND KCMMB5K FOR ALL POURED-IN-PLACE COMPONENTS AS APPROVED BY THE KANSAS CITY METROPOLITAN MATERIALS BOARD, AND SHALL MEET THE REQUIREMENTS OF THE SHAWNEE DESIGN AND CONSTRUCTION MANUAL.
8. CONCRETE CONSTRUCTION SHALL MEET THE APPLICABLE REQUIREMENTS OF STANDARD SPECIFICATIONS FOR STATE ROAD AND BRIDGE CONSTRUCTION, KANSAS DEPARTMENT OF TRANSPORTATION, LATEST EDITION.
9. INLET FLOORS SHALL BE SHAPED WITH NON-REINFORCED KCMMB4K CONCRETE INVERTS TO PROVIDE SMOOTH FLOW.
10. BEVEL ALL EXPOSED EDGES WITH ¾" TRIANGULAR MOLDING.

REINFORCING STEEL

11. REINFORCING STEEL SHALL BE NEW BILLET, MINIMUM GRADE 40 AS PER ASTM A615, AND SHALL BE BENT COLD.
12. ALL DIMENSIONS RELATIVE TO REINFORCING STEEL ARE TO CENTERLINE OF BARS. 2" CLEARANCE SHALL BE PROVIDED THROUGHOUT UNLESS NOTED OTHERWISE. TOLERANCE OF +/- ⅛" SHALL BE PERMITTED.
13. ALL LAP SPLICES NOT SHOWN SHALL BE A MINIMUM OF 40 BAR DIAMETERS IN LENGTH.
14. ALL REINFORCING STEEL SHALL BE SUPPORTED ON FABRICATED STEEL BAR SUPPORTS @ 3'-0" MAXIMUM SPACING.
15. ALL DOWELS SHALL BE ACCURATELY PLACED AND SECURELY TIED IN PLACE PRIOR TO PLACEMENT OF BOTTOM SLAB CONCRETE. STICKING OF DOWELS INTO FRESH OR PARTIALLY HARDENED CONCRETE WILL NOT BE ACCEPTABLE.

CONSTRUCTION

16. THE BOTTOM SLAB SHALL BE AT LEAST 24 HOURS OLD BEFORE PLACING SIDEWALL CONCRETE. ALL SIDEWALL FORMS SHALL REMAIN IN PLACE A MINIMUM OF 24 HOURS AFTER SIDEWALLS ARE POURED BEFORE REMOVAL, AND AFTER REMOVAL SHALL BE IMMEDIATELY TREATED WITH MEMBRANE CURING COMPOUND.
17. PIPE CONNECTIONS TO PRE-CAST STRUCTURES SHALL HAVE A MINIMUM OF 6" OF CONCRETE AROUND THE ENTIRE PIPE WITHIN 2' OF THE STRUCTURE.
18. ALL STRUCTURES THAT ABUT SIDEWALK SHALL BE BACKFILLED WITH FLOWABLE FILL TO UNEXCAVATED GROUND. FLOWABLE FILL SHALL BE BROUGHT TO 12" BELOW FINISHED GRADE. REMAINING BACKFILL SHALL MEET THE STANDARD DETAILS FOR SIDEWALK CONSTRUCTION.
19. MATERIAL SELECTION AND COMPACTION REQUIREMENTS FOR BACKFILL AROUND STRUCTURES SHALL BE AS SPECIFIED IN THE SHAWNEE DESIGN AND CONSTRUCTION MANUAL.
20. ALL TOPS SHALL BE POURED-IN-PLACE USING KCMMB5K.
21. ALL INVERTS & CONNECTIONS SHALL BE CONSIDERED SUBSIDIARY TO INSTALLATION OF STRUCTURE.

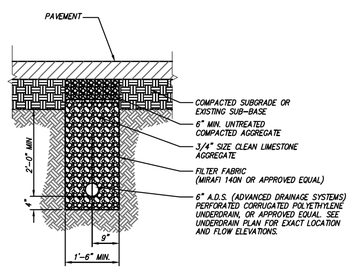

UNDERDRAIN DETAIL
(UNDER PAVEMENT)

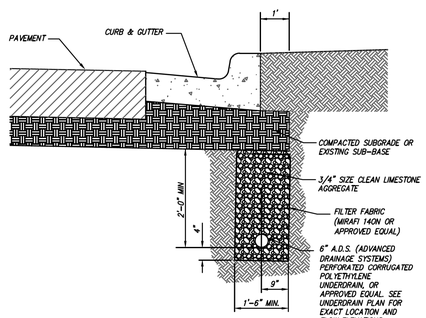

UNDERDRAIN DETAIL
(BEHIND CURB)

NOTES:

1. PROPOSED UNDERDRAIN LAYOUT, FLOWLINE ELEVATIONS, INLET CONNECTION POINTS, AND DETAILS SHALL BE APPROVED PRIOR TO CONSTRUCTION BY THE CITY ENGINEER.
2. ALL UNDERDRAIN PIPES SHALL HAVE WATERTIGHT JOINTS. ALL OUTLET PIPES SHALL BE TIED INTO THE NEAREST STORM SEWER INLET AS APPROVED. ALL CONNECTIONS BEWEEN UNDERDRAIN PIPES AND CURB INLETS SHALL BE MADE WITH 2' LENGTH OF OUTLET PIPE.
3. ALL UNDERDRAIN PIPES SHALL BE INSTALLED AT A MINIMUM SLOPE OF 1%. PIPE SHALL BE INSTALLED WITH THE PERFORATIONS PLACED DOWN.
4. FILTER FABRIC SEAMS SHALL BE OVERLAPPED A MINIMUM OF 12".
5. CONTRACTOR SHALL NOT MIX UNDERDRAIN TYPES OF MATERIALS WITHIN ANY UNDERDRAIN SYSTEM.

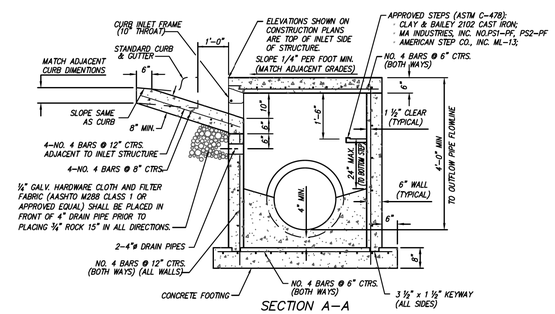

SETBACK CURB INLET DETAIL

Date	Revision	By	Appr.
3-1-14	SHAWNEE DESIGN & CONSTRUCTION MANUAL REVISIONS	MRS	PJL
8-21-12	REVISED TO MATCH CONSTRUCTION SPECIFICATION REVISIONS	MRS	PJL

STORM INLETS

DEVELOPMENT SERVICES

Good Starts Here — SHAWNEE KANSAS

DATE:	08-27-2007	3310A
DRAWN BY:	MRS	
CHECKED BY:	PJL	SHEET 1 OF 1

REV.	DATE	REVISIONS	BY	APP'D
5				
4				
3				
2				
1				

Designed By: PRP
Drawn By: JCK/JAA
Checked By: HDL
Issue Date: SEPT. 2016

COPYRIGHT © -2016-SHAFER, KLINE & WARREN INC.

SHAFER, KLINE & WARREN
11250 Corporate Avenue
Lenexa, KS 66219-1392
913.888.7800 FAX: 913.888.7868
SURVEYING | ENGINEERING | CONSTRUCTION

CLEAR CREEK PARKWAY
CITY OF SHAWNEE, KANSAS

DRAINAGE DETAILS (3)

150561-010

SHEET NO.
71 OF 182

LAYOUT: MODEL BY: jadams DATE: 20-SEP-2016 10:25:25 AM
L:\150561-010_Cad\Civil\Storm Sewer\150561-010_DRAIN-DET-03.dgn

NOT FOR CONSTRUCTION

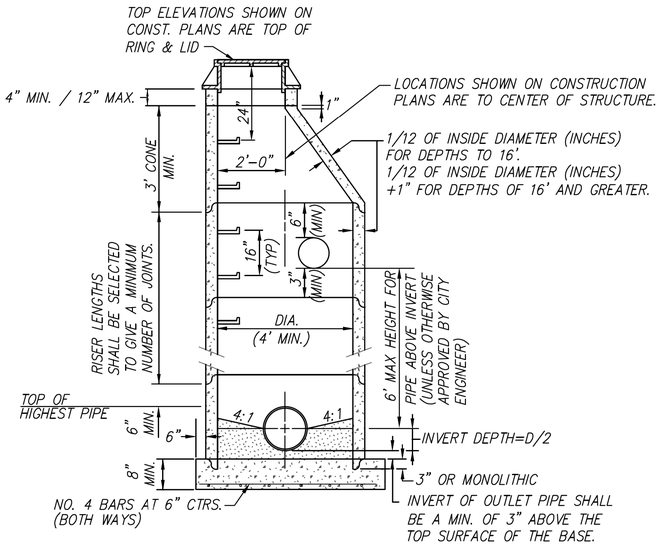

STANDARD PRECAST MANHOLE

(ECCENTRIC CONE)

MANHOLE DETAILS

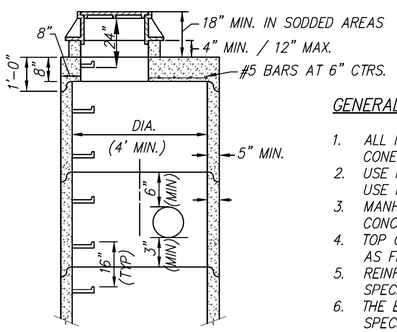

STANDARD PRECAST MANHOLE

(SHALLOW TYPE)

GENERAL NOTES:

1. ALL MANHOLES ARE TO BE PRECAST CONCRETE AND OF ECCENTRIC CONE TYPE UNLESS OTHERWISE SPECIFIED.
2. USE KCMMB5K FOR ALL PUBLIC & PRIVATE STORM SEWER MANHOLES. USE KCMMB4K FOR ALL INVERTS.
3. MANHOLE TOP ADJUSTMENTS SHALL BE ACCOMPLISHED BY THE USE OF CONCRETE ADJUSTMENT RINGS.
4. TOP OF MANHOLE CASTING SHALL BE SET FLUSH AND ON SAME SLOPE AS FINISHED SURFACE OR AS DIRECTED BY THE ENGINEER.
5. REINFORCEMENT IN ALL SECTIONS SHALL EQUAL OR EXCEED ASTM C478 SPECIFICATIONS.
6. THE ENGINEER SHALL DESIGNATE MODIFICATIONS FOR MANHOLES WITH SPECIAL DESIGNS.
7. THE INSIDE DIAMETER OF THE MANHOLE SHALL BE 4'-0" FOR PIPE DIAMETERS FROM 12" THROUGH 24", 5'-0" FOR PIPE DIAMETERS FROM 27" THROUGH 36", AND 6'-0" FOR PIPE DIAMETERS 42" THROUGH 48".
8. CLEARANCE TOLERANCE OF PIPE OPENINGS: THE MAXIMUM ALLOWABLE PIPE OPENING ON A HORIZONTAL AXIS SHALL BE THE OUTSIDE DIAMETER OF THE PIPE PLUS 12". THE MAXIMUM ALLOWABLE PIPE OPENING ON VERTICAL AXIS SHALL BE THE OUTSIDE DIAMETER PLUS 8". THE MINIMUM CLEARANCE BETWEEN THE OUTSIDE SURFACE OF AN INSTALLED PIPE AND THE CONCRETE OF THE MANHOLE SHALL BE 2".
9. INSTALLATION OF PIPE OPENINGS: ALL REQUIRED PIPE OPENINGS SHALL BE PLANT CAST IN MANHOLE UNITS. FIELD ALTERATIONS OF OPENINGS WILL BE PERMITTED PROVIDED WALLS ARE SCORED WITH A MASONRY SAW TO A DEPTH SUFFICIENT TO SEVER REINFORCING STEEL. A CHIPPING HAMMER MAY THEN BE USED TO REMOVE THE CONCRETE. MINIMUM DISTANCE BETWEEN ANY TWO ADJACENT PIPES SHALL BE 6".
10. ALL INVERTS & CONNECTIONS SHALL BE CONSIDERED SUBSIDIARY TO INSTALLATION OF MANHOLE.
11. RING & COVER TO BE EAST JORDAN IRON WORKS #00150230 (HEAVY DUTY) OR APPROVED EQUAL.
12. ALL STRUCTURES THAT ABUT SIDEWALK SHALL BE BACKFILLED WITH FLOWABLE FILL TO UNEXCAVATED GROUND. FLOWABLE FILL SHALL BE BROUGHT TO 12" BELOW FINISHED GRADE. REMAINING BACKFILL SHALL MEET THE STANDARD DETAILS FOR SIDEWALK CONSTRUCTION.
13. MATERIAL SELECTION AND COMPACTION REQUIREMENTS FOR BACKFILL AROUND STRUCTURES SHALL BE AS SPECIFIED IN THE SHAWNEE DESIGN AND CONSTRUCTION MANUAL.

GENERAL NOTES

GENERAL

1. ALL STORM SEWER STRUCTURES SHALL BE PRECAST OR POURED IN PLACE. TOPS SHALL BE POURED IN PLACE AND WALL STEEL SHALL BE LEFT EXPOSED TO A HEIGHT 2" BELOW THE FINISH TOP ELEVATION, OR AS DIRECTED BY THE CITY ENGINEER.
2. PRECAST SHOP DRAWINGS ARE TO BE APPROVED BY THE CITY ENGINEER (OR REPRESENTATIVE THEREOF) FOR PUBLICLY FINANCED OR ADMINISTERED PROJECTS. PRECAST SHOP DRAWINGS FOR PRIVATELY FINANCED PROJECTS ARE TO BE SUBMITTED TO THE ENGINEER.
3. DO NOT SCALE THESE DRAWINGS FOR DIMENSIONS OR CLEARANCES. ANY QUESTIONS REGARDING DIMENSIONS SHALL BE BROUGHT TO THE ATTENTION OF THE ENGINEER PRIOR TO CONSTRUCTION.
4. THE FIRST DIMENSION LISTED IN THE CONSTRUCTION NOTES IS THE "L" DIMENSION. THE SECOND DIMENSION IS THE "W" DIMENSION. THE CONCRETE THICKNESS AND REINFORCEMENT SHOWN IS FOR BOXES WITH ("L"+"H") AND ("W"+"H") LESS THEN OR EQUAL TO 20. FOR BOXES WITH EITHER OF THESE CALCULATIONS GREATER THAN 20, A SPECIAL DESIGN IS REQUIRED.
5. RING & COVER TO BE EAST JORDAN IRON WORKS #00150230 (HEAVY DUTY) OR APPROVED EQUAL.

CONCRETE

6. CONCRETE USED IN THIS WORK SHALL BE KCMMB4K FOR ALL PRECAST STRUCTURAL COMPONENTS, AND KCMMB5K FOR ALL POURED-IN-PLACE COMPONENTS AS APPROVED BY THE KANSAS CITY METROPOLITAN MATERIALS BOARD, AND SHALL MEET THE REQUIREMENTS OF THE SHAWNEE DESIGN AND CONSTRUCTION MANUAL.
7. CONCRETE CONSTRUCTION SHALL MEET THE APPLICABLE REQUIREMENTS OF STANDARD SPECIFICATIONS FOR STATE ROAD AND BRIDGE CONSTRUCTION, KANSAS DEPARTMENT OF TRANSPORTATION, LATEST EDITION.
8. INLET FLOORS SHALL BE SHAPED WITH NON-REINFORCED KCMMB4K CONCRETE INVERTS TO PROVIDE SMOOTH FLOW.
9. BEVEL ALL EXPOSED EDGES WITH ¾" TRIANGULAR MOLDING.

REINFORCING STEEL

10. REINFORCING STEEL SHALL BE NEW BILLET, MINIMUM GRADE 40 AS PER ASTM A615, AND SHALL BE BENT COLD.
11. ALL DIMENSIONS RELATIVE TO REINFORCING STEEL ARE TO CENTERLINE OF BARS. 2" CLEARANCE SHALL BE PROVIDED THROUGHOUT UNLESS NOTED OTHERWISE. TOLERANCE OF +/- ⅛" SHALL BE PERMITTED.
12. ALL LAP SPLICES NOT SHOWN SHALL BE A MINIMUM OF 40 BAR DIAMETERS IN LENGTH.
13. ALL REINFORCING STEEL SHALL BE SUPPORTED ON FABRICATED STEEL BAR SUPPORTS @ 3'-0" MAXIMUM SPACING.
14. ALL DOWELS SHALL BE ACCURATELY PLACED AND SECURELY TIED IN PLACE PRIOR TO PLACEMENT OF BOTTOM SLAB CONCRETE. STICKING OF DOWELS INTO FRESH OR PARTIALLY HARDENED CONCRETE WILL NOT BE ACCEPTABLE.

CONSTRUCTION

15. THE BOTTOM SLAB SHALL BE AT LEAST 24 HOURS OLD BEFORE PLACING SIDEWALL CONCRETE. ALL SIDEWALL FORMS SHALL REMAIN IN PLACE A MINIMUM OF 24 HOURS AFTER SIDEWALLS ARE POURED BEFORE REMOVAL, AND AFTER REMOVAL SHALL BE IMMEDIATELY TREATED WITH MEMBRANE CURING COMPOUND.
16. PIPE CONNECTIONS TO PRE-CAST STRUCTURES SHALL HAVE A MINIMUM OF 6" OF CONCRETE AROUND THE ENTIRE PIPE WITHIN 2' OF THE STRUCTURE.
17. ALL STRUCTURES THAT ABUT SIDEWALK SHALL BE BACKFILLED WITH FLOWABLE FILL TO UNEXCAVATED GROUND. FLOWABLE FILL SHALL BE BROUGHT TO 12" BELOW FINISHED GRADE. REMAINING BACKFILL SHALL MEET THE STANDARD DETAILS FOR SIDEWALK CONSTRUCTION.
18. MATERIAL SELECTION AND COMPACTION REQUIREMENTS FOR BACKFILL AROUND STRUCTURES SHALL BE AS SPECIFIED IN THE SHAWNEE DESIGN AND CONSTRUCTION MANUAL.
19. ALL TOPS SHALL BE POURED-IN-PLACE USING KCMMB5K.
20. ALL INVERTS & CONNECTIONS SHALL BE CONSIDERED SUBSIDIARY TO INSTALLATION OF STRUCTURE.

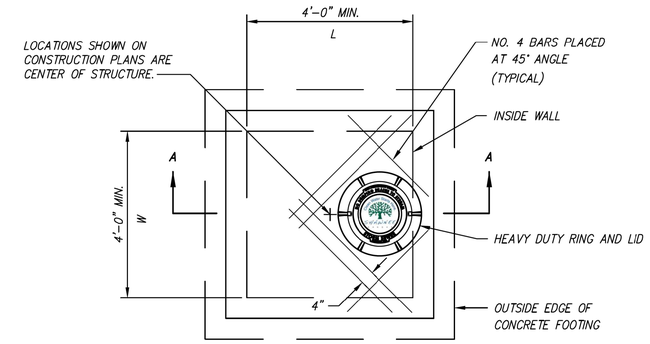

PLAN

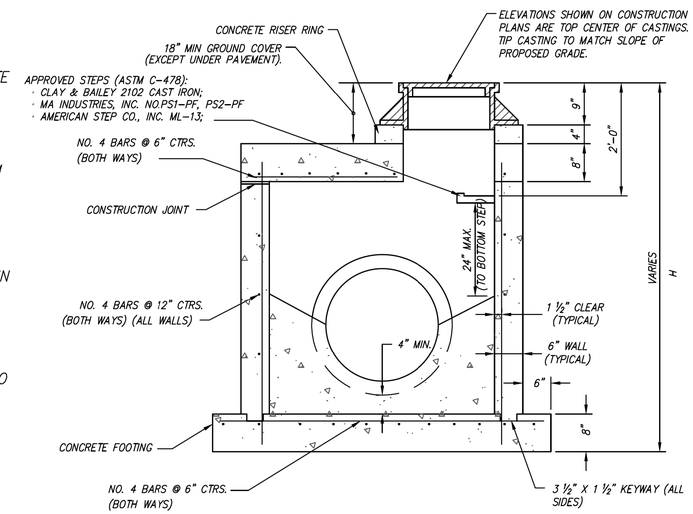

SECTION A-A

JUNCTION BOX DETAILS

Date	Revision	By	Appr.
3-1-14	SHAWNEE DESIGN & CONSTRUCTION MANUAL REVISIONS	MRS	PJL
8-21-12	REVISED TO MATCH CONSTRUCTION SPECIFICATION REVISIONS	MRS	PJL

JUNCTION BOX / MANHOLE DETAILS

DEVELOPMENT SERVICES

Good Starts Here. SHAWNEE KANSAS

DATE:	08-27-2007	3310B
DRAWN BY:	MRS	
CHECKED BY:	PJL	SHEET 1 OF 1

REV.	DATE	REVISIONS	BY	APP'D
1				
2				
3				
4				
5				

Designed By: PRP
Drawn By: JCK/JAA
Checked By: HDL
Issue Date: SEPT. 2016

COPYRIGHT © -2016-SHAFER, KLINE & WARREN INC.

SHAFER, KLINE & WARREN
11250 Corporate Avenue
Lenexa, KS 66219-1392
913.888.7800 FAX: 913.888.7868
SURVEYING | ENGINEERING | CONSTRUCTION

CLEAR CREEK PARKWAY
CITY OF SHAWNEE, KANSAS

DRAINAGE DETAILS (4)

150561-010

LAYOUT: MODEL | BY: jadams | DATE: 20-SEP-2016 10:26:09 AM
L:\150561-010_Cad\Civil\Storm Sewer\150561-010_DRAIN-DET-04.dgn

NOT FOR CONSTRUCTION

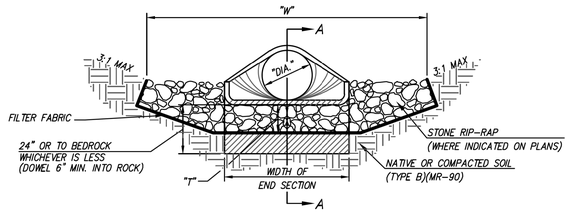

END VIEW

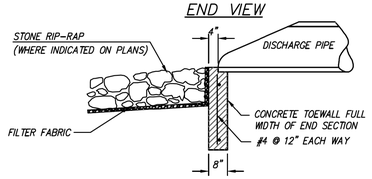

SECTION A–A

NOTE:
CONCRETE SHALL BE KCMMB4K (MIN)

STORM SEWER END SECTION W/ TOEWALL & RIP-RAP

SLOPE PROTECTION TABLE		
OUTLET DIAMETER (INCHES)	MINIMUM DEPTH (T) X WIDTH (W) X LENGTH (FEET)	RIPRAP LINING (CUBIC YARDS)
18	1.5 X 4 X 12	3
24	1.5 X 6 X 14	5
30	1.5 X 7 X 16	6
36	1.5 X 9 X 18	9
42	2 X 10 X 20	15
48	2 X 12 X 20	18
54	2 X 13.5 X 22	22
60	2 X 15 X 25	28
66	2 X 18 X 25	33
72	2 X 20 X 30	44
84	2.5 X 25 X 35	81
96	2.5 X 30 X 40	111
108	3 X 32 X 40	142

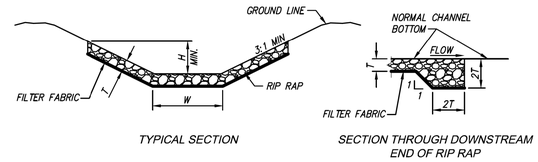

TYPICAL SECTION

SECTION THROUGH DOWNSTREAM END OF RIP RAP

RIP RAP FOR SMALL DRAINAGE CHANNELS

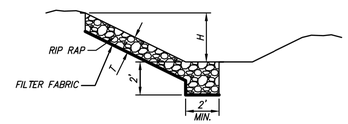

TYPICAL SECTION OF RIP RAP ALONG SLOPES

RIP RAP

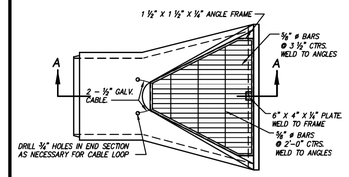

PLANVIEW

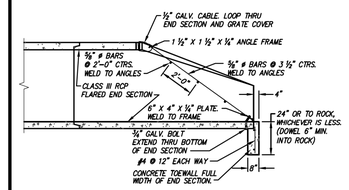

SECTION A–A

END SECTION NOTES

1. GRATE COVER DETAIL SHALL BE ADJUSTED AS NECESSARY TO FIT END SECTION PROVIDED.
2. MAXIMUM OPENING THRU END SECTION SHALL BE NO GREATER THAN 6". ADJUST DETAIL AS NECESSARY.
3. ALL METAL SURFACES SHALL BE HOT DIP ZINC COATED IN ACCORDANCE WITH ASTM A-123.
4. USE KCMMB4K CONCRETE THROUGHOUT.
5. ALL CONCRETE USED IN THIS WORK SHALL MEET THE REQUIREMENTS OF THE SHAWNEE TECHNICAL SPECIFICATIONS.
6. REINFORCING STEEL SHALL BE NEW BILLET, MINIMUM GRADE 40 AS PER ASTM A615, AND SHALL BE BENT COLD.
7. ALL DIMENSIONS RELATIVE TO REINFORCING STEEL ARE TO CENTERLINE OF BARS. 2" CLEARANCE SHALL BE PROVIDED THROUGHOUT UNLESS NOTED OTHERWISE. TOLERANCE OF +/- 1/8" SHALL BE PERMITTED.
8. ALL LAP SPLICES NOT SHOWN SHALL BE A MINIMUM OF 40 BAR DIAMETERS IN LENGTH.
9. ALL CONCRETE CONSTRUCTION SHALL MEET THE APPLICABLE REQUIREMENTS OF STANDARD SPECIFICATIONS FOR STATE ROAD AND BRIDGE CONSTRUCTION, KANSAS DEPARTMENT OF TRANSPORTATION, LATEST EDITION, AND SPECIAL PROVISIONS.
10. ALL DOWELS SHALL BE ACCURATELY PLACED AND SECURELY TIED IN PLACE PRIOR TO PLACEMENT OF BOTTOM SLAB CONCRETE. STICKING OF DOWELS INTO FRESH OR PARTIALLY HARDENED CONCRETE WILL NOT BE ACCEPTABLE.
11. ALL REINFORCING STEEL SHALL BE SUPPORTED ON FABRICATED STEEL BAR SUPPORTS @ 3'-0" MAXIMUM SPACING.
12. DO NOT SCALE THESE DRAWINGS FOR DIMENSIONS OR CLEARANCES. SEE PLANS FOR PROPER DIMENSIONS.
13. INCLUSION OF ALL GRATES SHALL BE PRE APPROVED BY CITY ENGINEER.

END SECTION TOEWALL & GRATE

SECTION A–A

NOTE:
DESIGN OF PLUNGE POOL DISSIPATOR SHALL BE PER HEC-14 AND SHALL BE APPROVED BY CITY ENGINEER.

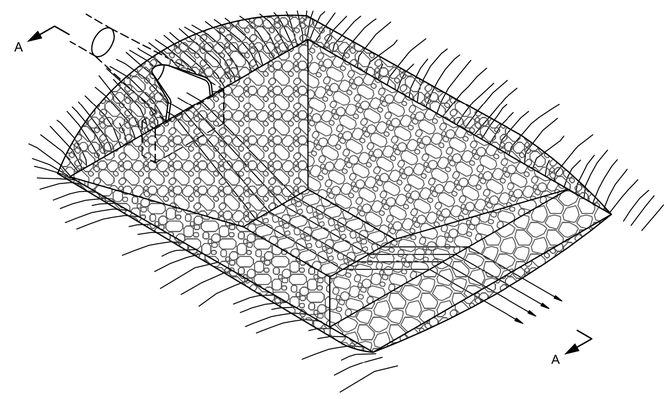

PLUNGE POOL DISSIPATOR

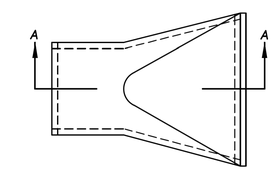

PLAN VIEW

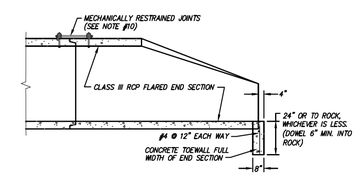

SECTION A–A

END SECTION NOTES

1. USE KCMMB4K CONCRETE THROUGHOUT.
2. ALL CONCRETE USED IN THIS WORK SHALL MEET THE REQUIREMENTS OF THE SHAWNEE TECHNICAL SPECIFICATION.
3. REINFORCING STEEL SHALL BE NEW BILLET, MINIMUM GRADE 40 AS PER ASTM A615, AND SHALL BE BENT COLD.
4. ALL DIMENSIONS RELATIVE TO REINFORCING STEEL ARE TO CENTERLINE OF BARS. 2" CLEARANCE SHALL BE PROVIDED THROUGHOUT UNLESS NOTED OTHERWISE. TOLERANCE OF +/- 1/8" SHALL BE PERMITTED.
5. ALL LAP SPLICES NOT SHOWN SHALL BE A MINIMUM OF 40 BAR DIAMETERS IN LENGTH.
6. ALL CONCRETE CONSTRUCTION SHALL MEET THE APPLICABLE REQUIREMENTS OF STANDARD SPECIFICATIONS FOR STATE ROAD AND BRIDGE CONSTRUCTION, KANSAS DEPARTMENT OF TRANSPORTATION, LATEST EDITION, AND SPECIAL PROVISIONS.
7. ALL DOWELS SHALL BE ACCURATELY PLACED AND SECURELY TIED IN PLACE PRIOR TO PLACEMENT OF BOTTOM SLAB CONCRETE. STICKING OF DOWELS INTO FRESH OR PARTIALLY HARDENED CONCRETE WILL NOT BE ACCEPTABLE.
8. ALL REINFORCING STEEL SHALL BE SUPPORTED ON FABRICATED STEEL BAR SUPPORTS @ 3'-0" MAXIMUM SPACING.
9. DO NOT SCALE THESE DRAWINGS FOR DIMENSIONS OR CLEARANCES. SEE PLANS FOR PROPER DIMENSIONS.
10. THE LAST THREE JOINTS OF RCP, INCLUDING THE END SECTION, SHALL BE MECHANICALLY RESTRAINED WHERE DISCHARGING INTO UNIMPROVED SYSTEMS.

END SECTION TOEWALL

Date	Revision	By	Appr.
3-1-14	SHAWNEE DESIGN & CONSTRUCTION MANUAL REVISIONS	MRS	PJL
8-21-12	REVISED TO MATCH CONSTRUCTION SPECIFICATION REVISIONS	MRS	PJL

TOEWALL / RIP RAP DETAILS

DEVELOPMENT SERVICES

Good Starts Here. SHAWNEE KANSAS

DATE:	08-27-2007	3311
DRAWN BY:	MRS	
CHECKED BY:	PJL	SHEET 1 OF 1

REV.	DATE	REVISIONS	BY	APP'D
5				
4				
3				
2				
1				

Designed By: PRP
Drawn By: JCK/JAA
Checked By: HDL
Issue Date: SEPT. 2016

COPYRIGHT © -2016-SHAFER, KLINE & WARREN INC.

SHAFER, KLINE & WARREN
11250 Corporate Avenue
Lenexa, KS 66219-1392
913.888.7800 FAX: 913.888.7868
SURVEYING | ENGINEERING | CONSTRUCTION

CLEAR CREEK PARKWAY
CITY OF SHAWNEE, KANSAS

DRAINAGE DETAILS (5)

150561-010

LAYOUT: MODEL | BY: jadams | DATE: 20-SEP-2016 10:26:37 AM
L:\150561-010_Cad\Civil\Storm Sewer\150561-010_DRAIN-DET-05.dgn

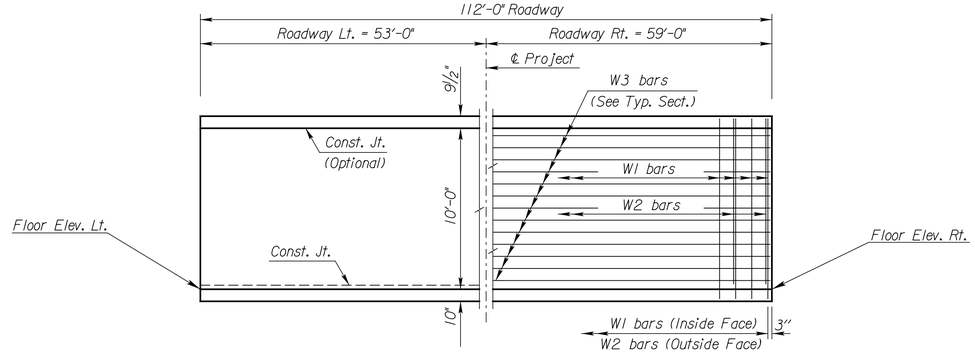

SECTION AND ELEVATION

(Normal to ℄ Roadway)

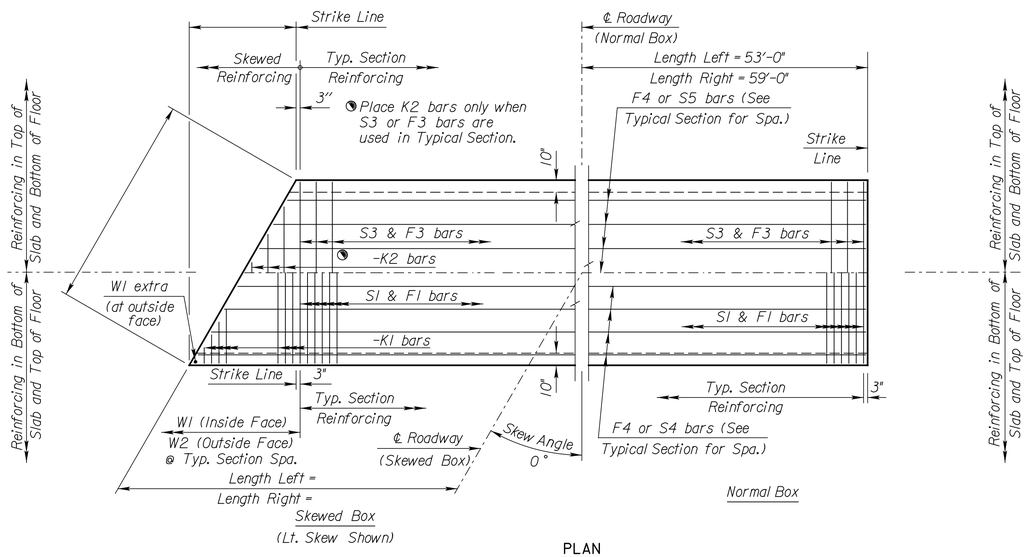

PLAN

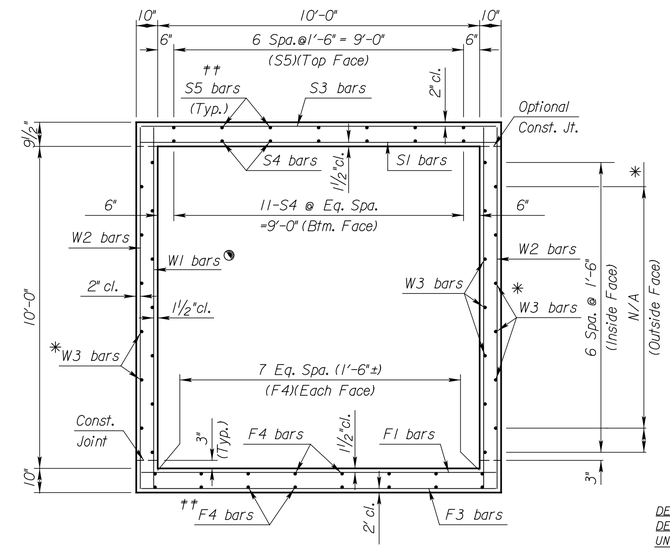

TYPICAL SECTION

STATE	PROJECT NO.	YEAR	SHEET NO.	TOTAL SHEETS
KANSAS	150561-010			

See RCB Auxiliary Details for Optional Splice.

Note:
S3 bars omitted unless grade box or slab thickness is greater than or equal to 12".

Note:
F3 bars omitted unless floor thickness is greater than or equal to 12.".

†† Omit S5 bars when S3 bars are omitted and omit the bottom layer of F4 bars when F3 bars are omitted.

✳ Omit when W2 bar is omitted.

Note:
W2 bars omitted unless wall thickness is greater than or equal to 12".

GENERAL NOTES

DESIGN SPECIFICATION: AASHTO LRFD Spec., 2007 Ed., 2009 Int.
DESIGN LOADING: HL93
UNIT STRESSES: Grade 4.0 Concrete f'c = 4,000 p.s.i.
Reinforcing Steel fy = 60,000 p.s.i.

FILL HEIGHT: Unless otherwise noted, the Design Fill Height is measured from the riding surface at the culvert and includes the surfacing.

CONCRETE: Use concrete conforming to Grade 4.0 Concrete. Bevel all exposed edges with a ¾" triangular molding. Where Grade 4.0(AE) is specified, place this concrete in the top slab above the Construction Joint.

REINFORCING: Use reinforcing steel conforming to ASTM A615, Grade 60. All dimensions relative to reinforcing steel are to the centerline of the bar unless otherwise noted.

EXCAVATION: Excavation for culverts less than bridge length shall not be paid for directly but shall be subsidiary to Grade 4.0 Concrete. Excavation for RCB bridges shall be paid for as Class III Excavation.

SEAL COURSE: The Engineer may require a seal course. The seal course shall be unreinforced Concrete(Commercial Grade) with a minimum depth of 3 inches or as determined by the Engineer. Concrete for the seal course shall be paid for at the unit price set for Concrete for Seal Course.

FOUNDATION STABILIZATION: The Foundation Stabilization quantity has been calculated to the limits shown on the "RCB Auxiliary Details" sheet. The depth may be increased by the Engineer. The Contractor may underrun Foundation Stabilization under the barrel if founded on firm material and with the Engineer's approval. Use Foundation Stabilization on all wingwalls unless founded on rock or granular material.

QUANTITIES: The quantities shown in the Culvert Summary include apron and/or soil saver quantities when they are required by the plans. Payment for additional quantities that result from including a seal course and/or a floating apron, as a change in the original plans, shall be made at the unit price bid for the various items involved.

GRANULAR BACKFILL (WINGWALLS):
See the "Auxiliary Details" sheet.

STRIKE LINE: Construct the wingwalls and that portion of the RCB outside the Strike Line level. Construct the wingwall footings with the culvert floor. See the wingwall detail sheets.

BRIDGE BACKWALL PROTECTION SYSTEM: For structures with this bid item in the Summary of Quantities. See the "Auxiliary Details" sheet.

For design purposes ONLY. Do NOT use for Construction — CULVERT SUMMARY — includes any welded wire fabric

Floor Elev. Lt.	Floor Elev. Rt.	Crown Gr. Elev.	Design Fill Ht.	Skew	Left Wings	Right Wings	Scour Apron	Soil Saver	Concrete: Barrel (Cu.Yds.)	Concrete: Wings (Cu.Yds.)	Concrete: Total (Cu.Yds.)	Reinf. Steel (Gr. 60): Barrel (Lbs.)	Reinf. Steel (Gr. 60): Wings (Lbs.)	Reinf. Steel (Gr. 60): Total (Lbs.)	LRFR RATING FACTORS HL-93 Loading: Inventory	Operating
846.76	843.84	857.72	2	0	None	None	No	No	148.19		148.19	16133		16133	1.04	1.35

△ Epoxy Coated Bars

BAR SCHEDULE

△ F1 Size	Spa.	No.	Length		Size	Spa.	No.	Length	△ F3 Size	Spa.	No.	Length	△ F4 Size	No.	Length	△ S1 Size	Spa.	No.	Length		Size	Spa.	No.	Length	△ S3 Size	Spa.	No.	Length	△ S4 Size	No.	Length	△ S5 Size	No.	Length
6	5"	269	11'-4"		N/A	N/A	N/A	N/A	N/A	N/A	N/A	11'-4"	4	24	38'-2"	6	5"	269	11'-4"		N/A	N/A	N/A	N/A	N/A	N/A	N/A	11'-4"	5	22	56'-9"	4	N/A	38'-2"

△ K1 Size	Spa.	No.	Length		△ K2 Size	Spa.	No.	Length		△ W1 Size	Spa.	No.	Length	△ W2 Size	Spa.	No.	Length	△ W3 Size	No.	Length		△ Size	Spa.	No.	Length	△ G1 Size	No.	Length	△ G2 Size	No.	Length		Size	Spa.	No.	Length
N/A	N/A	N/A			N/A	N/A	N/A			5	8"	336	11'-3"	N/A	N/A	N/A	N/A	4	42	38'-2"		N/A	N/A	N/A	N/A	5	4	11'-4"	N/A	N/A	N/A					

Minimum Splice Lengths	
#4	1'-5"
#5	1'-9"

SUMMARY OF QUANTITIES

Concrete (Grade 4.0)	109.5 C.Y.
Concrete (Grade 4.0)(AE)	38.2 C.Y.
Bridge Backwall Protection System	168 S.Y.
Reinforcing Steel (Gr. 60)	0 Lbs.
Reinforcing Steel (Gr. 60)(Epoxy Coated)	16083 Lbs.
Class III Excavation	C.Y.
Foundation Stabilization	33 C.Y.
Concrete for Seal Course (Set)	1 C.Y.
Granular Backfill (Wingwalls)	0 C.Y.

NO.	DATE	REVISIONS	BY	APP'D
1				

KANSAS DEPARTMENT OF TRANSPORTATION
Serial No.(000) Sta. 42+83.07
SINGLE 10 ft x 10 ft RCB

BR 1.10.10 P Johnson Co.

FHWA APPROVAL		10-20-10	APP'D	Terry L. Fleck
DESIGNED	DETAILED		QUANTITIES	CADD
DESIGN CK.	DETAIL CK.		QUAN. CK.	CADD CK.

NOTE: AT THE CONTRACTORS OPTION A PRECAST RCB MAY BE USED, THE DRIVING SURFACE OF THE BOX SHALL HAVE A SMOOTH SURFACE FREE OF CHAMFERED CONSTRUCTION JOINTS, THE MINIMUM 10'-0" CLEARNACE MUST BE MAINTAINED. CONTRACTOR SHALL SUBMIT DRAWINGS FOR APPROVAL PRIOR TO CONSTRUCTION.

NO.	DATE	REVISIONS	BY	APP'D
5				
4				
3				
2				
1				

Designed By: PRP
Drawn By: JCK/JAA
Checked By: HDL
Issue Date: SEPT. 2016

COPYRIGHT © -2016-SHAFER, KLINE & WARREN INC.

SHAFER, KLINE & WARREN
11250 Corporate Avenue
Lenexa, KS 66219-1392
913.888.7800 FAX: 913.888.7868
SURVEYING | ENGINEERING | CONSTRUCTION

CLEAR CREEK PARKWAY
CITY OF SHAWNEE, KANSAS

10X10 RCB PLAN & ELEVATION

150561-010

SHEET NO.
0 OF 182

LAYOUT: MODEL BY: jadams DATE: 20-SEP-2016 10:27:10 AM
L:\150561-010_Cad\Structural\150561-010_RCB.dgn

STATE	PROJECT NO.	YEAR	SHEET NO.	TOTAL SHEETS
KANSAS	150561-010			

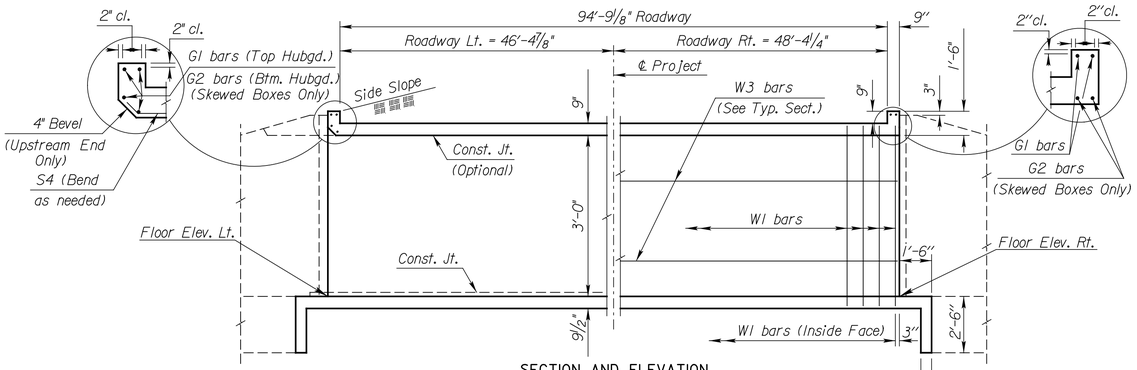

SECTION AND ELEVATION

(Normal to ℄ Roadway)

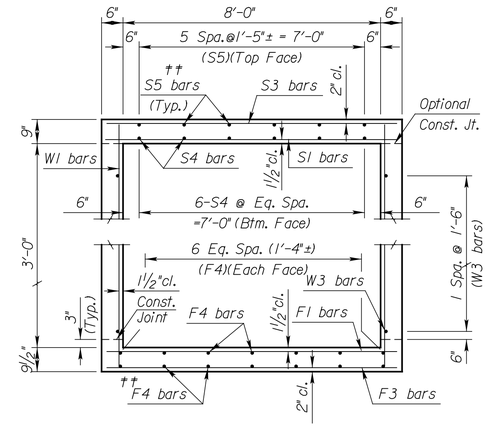

TYPICAL SECTION

Note:
S3 bars omitted unless grade box or slab thickness is greater than or equal to 12".

Note:
F3 bars omitted unless floor thickness is greater than or equal to 12".

†† Omit S5 bars when S3 bars are omitted and omit the bottom layer of F4 bars when F3 bars are omitted.

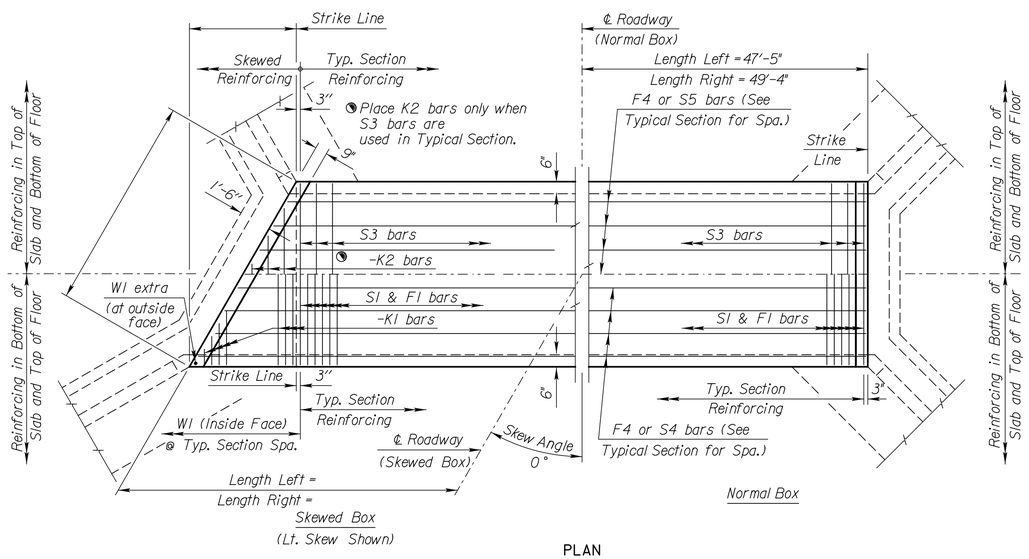

PLAN

For design purposes ONLY. Do NOT use for Construction					CULVERT SUMMARY					includes any welded wire fabric					LRFR RATING FACTORS	
Floor Elev. Lt.	Floor Elev. Rt.	Crown Gr. Elev.	Design Fill Ht.	Skew	Left Wings	Right Wings	Scour Apron	Soil Saver	Concrete Barrel (Cu.Yds.)	Concrete Wings (Cu.Yds.)	Concrete Total (Cu.Yds.)	Reinf. Steel (Gr. 60) Barrel (Lbs.)	Reinf. Steel (Gr. 60) Wings (Lbs.)	Reinf. Steel (Gr. 60) Total (Lbs.)	HL-93 Loading Inventory	HL-93 Loading Operating
827.77	827.45	833.93	3	0	Flared	Flared	Yes	Yes	60.83	9.03	69.87	6935	1000	7935	1.61	2.09

△ Epoxy Coated Bars

BAR SCHEDULE

△ F1								△ F3				△ F4			△ S1								△ S3				△ S4			△ S5		
Size	Spa.	No.	Length	Size	Spa.	No.	Length	Size	Spa.	No.	Length	Size	No.	Length	Size	Spa.	No.	Length	Size	Spa.	No.	Length	Size	Spa.	No.	Length	Size	No.	Length	Size	No.	Length
6	6"	194	8'-8"	N/A	N/A	N/A	N/A	N/A	N/A	N/A	8'-8"	4	21	33'-2"	6	6"	194	8'-8"	N/A	N/A	N/A	N/A	N/A	N/A	N/A	8'-8"	4	18	33'-2"	4	N/A	33'-2"

△ K1				△ K2				△ W1				△				△ W3				△				△ G1				△ G2							
Size	Spa.	No.	Length	Size	Spa.	No.	Length	Size	Spa.	No.	Length	Size	Spa.	No.	Length	Size	Spa.	No.	Length	Size	Spa.	No.	Length	Size	No.	Length	Size	Size	Spa.	No.	Length	Size	Spa.	No.	Length
N/A	N/A	N/A		N/A	N/A	N/A		4	9"	258	4'-2"	N/A	N/A	N/A	N/A	4	12	33'-2"	N/A	N/A	N/A	N/A	N/A	5	4	8'-8"	N/A	N/A	N/A					

Minimum Splice Lengths	
#4	1'-5"
#5	1'-9"

SUMMARY OF QUANTITIES		
Concrete (Grade 4.0)	45.3	C.Y.
Concrete (Grade 4.0)(AE)	24.5	C.Y.
Bridge Backwall Protection System	116	S.Y.
Reinforcing Steel (Gr. 60)	1000	Lbs.
Reinforcing Steel (Gr. 60)(Epoxy Coated)	6940	Lbs.
Class III Excavation		C.Y.
Foundation Stabilization	29	C.Y.
Concrete for Seal Course (Set)	1	C.Y.
Granular Backfill (Wingwalls)	16	C.Y.

GENERAL NOTES

DESIGN SPECIFICATION: AASHTO LRFD Spec., 2007 Ed., 2009 Int.
DESIGN LOADING: HL93
UNIT STRESSES: Grade 4.0 Concrete f'c = 4,000 p.s.i.
Reinforcing Steel fy = 60,000 p.s.i.

FILL HEIGHT: Unless otherwise noted, the Design Fill Height is measured from the riding surface at the culvert and includes the surfacing.

CONCRETE: Use concrete conforming to Grade 4.0 Concrete. Bevel all exposed edges with a 3/4" triangular molding. Where Grade 4.0(AE) is specified, place this concrete in the top slab above the Construction Joint.

REINFORCING: Use reinforcing steel conforming to ASTM A615, Grade 60. All dimensions relative to reinforcing steel are to the centerline of the bar unless otherwise noted.

EXCAVATION: Excavation for culverts less than bridge length shall not be paid for directly but shall be subsidiary to Grade 4.0 Concrete. Excavation for RCB bridges shall be paid for as Class III Excavation.

SEAL COURSE: The Engineer may require a seal course. The seal course shall be unreinforced Concrete(Commercial Grade) with a minimum depth of 3 inches or as determined by the Engineer. Concrete for the seal course shall be paid for at the unit price set for Concrete for Seal Course.

FOUNDATION STABILIZATION: The Foundation Stabilization quantity has been calculated to the limits shown on the "RCB Auxiliary Details" sheet. The depth may be increased by the Engineer. The Contractor may underrun Foundation Stabilization under the barrel if founded on firm material and with the Engineer's approval. Use Foundation Stabilization on all wingwalls unless founded on rock or granular material.

QUANTITIES: The quantities shown in the Culvert Summary include apron and/or soil saver quantities when they are required by the plans. Payment for additional quantities that result from including a seal course and/or a floating apron, as a change in the original plans, shall be made at the unit price bid for the various items involved.

GRANULAR BACKFILL (WINGWALLS): See the "Auxiliary Details" sheet.

STRIKE LINE: Construct the wingwalls and that portion of the RCB outside the Strike Line level. Construct the wingwall footings with the culvert floor. See the wingwall detail sheets.

BRIDGE BACKWALL PROTECTION SYSTEM: For structures with this bid item in the Summary of Quantities. See the "Auxiliary Details" sheet.

NO.	DATE	REVISIONS	BY	APP'D
1				

KANSAS DEPARTMENT OF TRANSPORTATION
Sta. N/A
SINGLE 8 ft x 3 ft RCB

BR 1.8.3 P — Johnson Co.

FHWA APPROVAL	10-20-10	APP'D	Terry L. Fleck
DESIGNED	DETAILED	QUANTITIES	CADD
DESIGN CK.	DETAIL CK.	QUAN. CK.	CADD CK.

NO.	DATE	REVISIONS	BY	APP'D
5				
4				
3				
2				
1				

Designed By: PRP
Drawn By: JCK/JAA
Checked By: HDL
Issue Date: SEPT. 2016

COPYRIGHT © -2016-SHAFER, KLINE & WARREN INC.

SHAFER, KLINE & WARREN
11250 Corporate Avenue
Lenexa, KS 66219-1392
913.888.7800 FAX: 913.888.7868
SURVEYING | ENGINEERING | CONSTRUCTION

CLEAR CREEK PARKWAY
CITY OF SHAWNEE, KANSAS

8X3 RCB PLAN & ELEVATION

150561-010

LAYOUT: MODEL | BY: jadams | DATE: 20-SEP-2016 10:27:13 AM
L:\150561-010_Cad\Structural\150561-010 RCB 8x3.dgn

STATE	PROJECT NO.	YEAR	SHEET NO.	TOTAL SHEETS
KANSAS	150561-010			

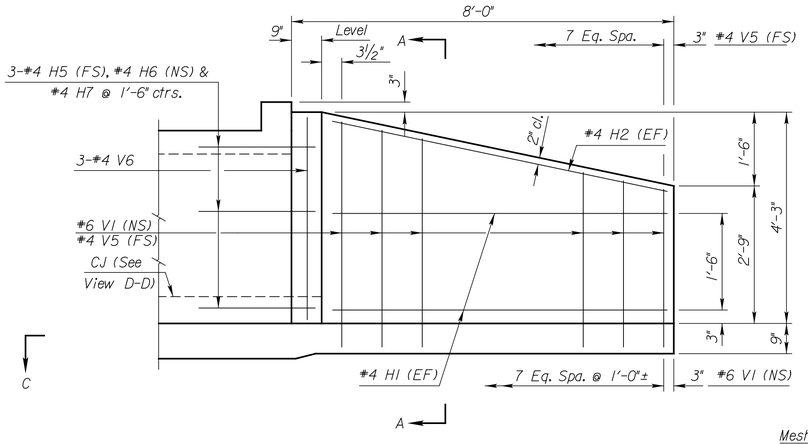

ELEVATION OF WINGWALL

(Backface Shown)

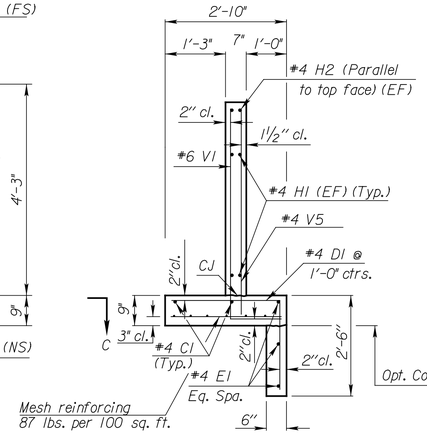

SECTION A-A

See "RCB Aux. Details" sheet for additional requirements.

Typical both wings

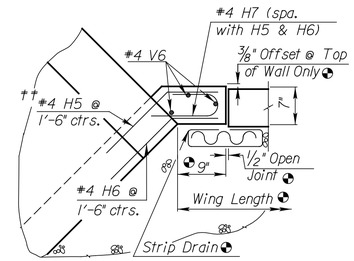

WINGWALL JOINT DETAIL

(Plan View)

† NOTE: Const. Jt. may be used at Contractor's option when approved by the Engineer. D1 bars or mesh may be spliced thus: Minimum overlap shall be 1'-3". No increase in quantities or cost shall be allowed when Contractor elects this option.

GENERAL NOTES

DESIGN SPECIFICATION: AASHTO LRFD Spec., 2007 Ed., 2009 Int.
DESIGN LOADING: HL93
UNIT STRESSES: Grade 4.0 Concrete; f'c = 4,000 p.s.i.
Reinforcing Steel; fy = 60,000 p.s.i.
CONCRETE: Grade 4.0 Concrete shall be used throughout. Bevel all exposed edges with a 3/4" triangular moulding.
REINFORCING: All reinforcing shall conform to ASTM A615, Grade 60. Welded Wire Fabric shall conform to ASTM A185. All dimensions relative to reinforcing steel shall be to center-line of bar unless otherwise noted. Wire Reinforcing mesh shall be electrically welded and shall be composed of 6 x 6- W6 x W6 welded wire fabric and shall be classified as pounds of reinforcing and included in the total quantity for the bid item Reinforcing Steel (Gr. 60)
QUANTITIES: Wingwall Quantities include all quantities outside the neat lines of the box, excluding the hubguard.
APRON: A 5" concrete slab shall be constructed between the downstream wings in locations subject to scour only when specified on the plans or by the Engineer.
BACKFILL MATERIAL: Use Granular Backfill material meeting the requirements of SB-1, SB-2, SCA-1, SCA-2.
Backfill all wings to limits shown on the "RCB Auxiliary Sheet".
FILTER FABRIC: Separate in-situ material from granular backfill with approved filter fabric complying with Section 1710.
Filter Fabric is subsidiary to "Granular Backfill".
FOUNDATION STABILIZATION: Use Foundation Stabilization on all wingwalls unless founded on rock or granular material.

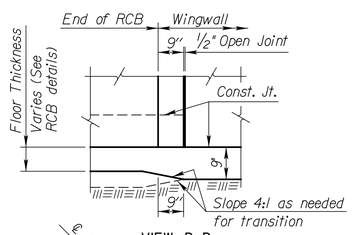

VIEW D-D

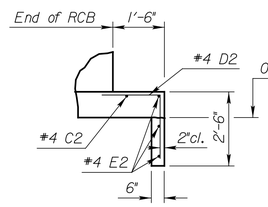

SECTION E-E

NOTE:
EF = Each Face
NS = Near Side
FS = Far Side
CJ = Const. Joint

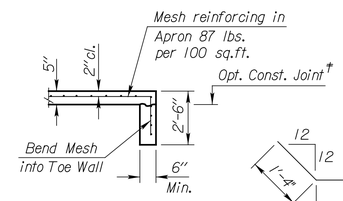

SECTION B-B

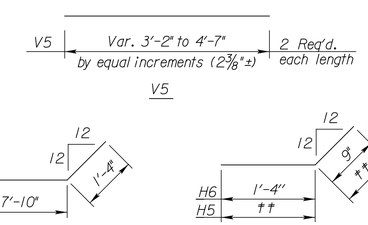

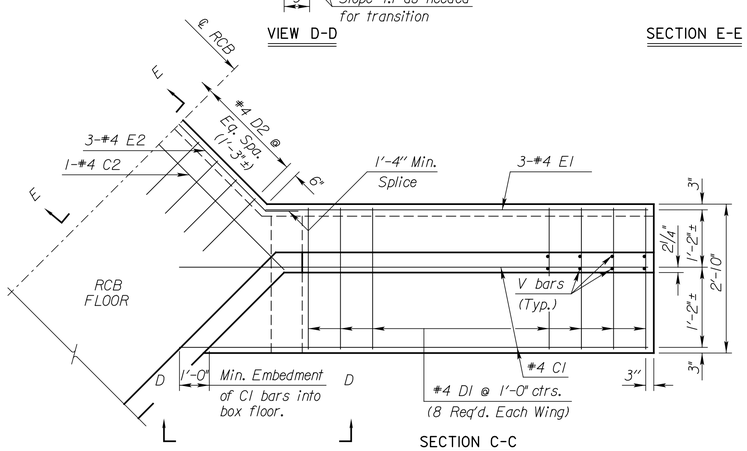

SECTION C-C

(Plan of Footing)

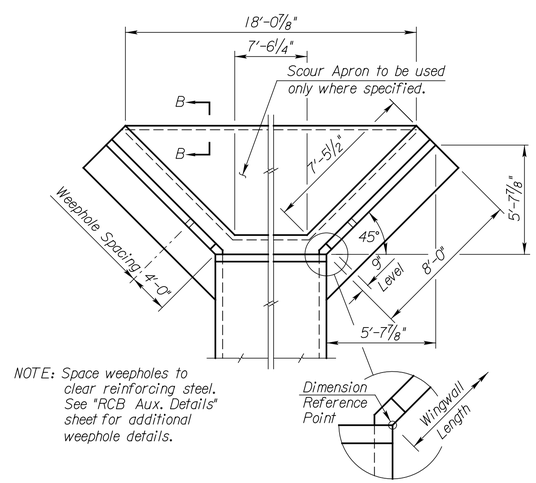

NOTE: Space weepholes to clear reinforcing steel. See "RCB Aux. Details" sheet for additional weephole details.

WING DIMENSIONS FOR NORMAL BOX

(3 1/2:1 Embankment Slope)

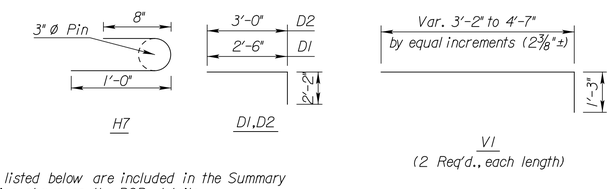

BENDING DIAGRAM

(All dimensions are out to out of bars.)

†† Bend in Field

Quantities listed below are included in the Summary of Quantities shown on the RCB details.

WINGWALL QUANTITIES (One End Only)	Foundation Stabilization		Concrete (Gr. 4.0)	
Wingwalls	1.44	(C.Y.)	3.66	(C.Y.)
Apron	1.09	(C.Y.)	1.72	(C.Y.)
Soil Saver	0.87	(C.Y.)	?.??	(C.Y.)
Reinforcing Steel (Gr. 60)			411	Lbs.
Welded Wire Fabric (Wings)			39	Lbs.
Welded Wire Fabric (Apron)			98	Lbs.
Granular Backfill (Wingwalls)			8.00	C.Y.
Filter Fabric (subsidiary)			14.00	S.Y.

NOTE: Reinforcing Bar List is for both wings at one end of box only.

0° Skew		#4C1	#4D1	#4E1	#4C2	#4D2	#4E2	#6V1	#4H1	#4H2	#4H5	#4H6	#4H7	#4V5	#4V6
	No.	4	16*	6	1	6*	3*	16	8	4	6*	6*	6*	16	6
	Length	9'-10"	4'-8"	7'-3"	8'-8"	5'-2"	10'-6"	*	6'-10"	7'-0"	1'-10"	2'-1"	1'-9"	*	4'-0"

* See Bending Diagram

NO.	DATE	REVISIONS	BY	APP'D
3				
2				
1				

KANSAS DEPARTMENT OF TRANSPORTATION

Sta. N/A

FLARED WINGWALLS
3 ft Rise (0°SKEW)

BR 10.00.03 Johnson Co.

FHWA APPROVAL	10-20-10	APP'D	Terry L. Fleck
DESIGNED	DETAILED	QUANTITIES	CADD
DESIGN CK.	DETAIL CK.	QUAN. CK.	CADD CK.

NO.	DATE	REVISIONS	BY	APP'D
5				
4				
3				
2				
1				

Designed By: PRP
Drawn By: JCK/JAA
Checked By: HDL
Issue Date: SEPT. 2016

COPYRIGHT © -2016-SHAFER, KLINE & WARREN INC.

SHAFER, KLINE & WARREN
11250 Corporate Avenue
Lenexa, KS 66219-1392
913.888.7800 FAX: 913.888.7868
SURVEYING | ENGINEERING | CONSTRUCTION

CLEAR CREEK PARKWAY
CITY OF SHAWNEE, KANSAS

8X3 RCB WINGWALL DETAILS

150561-010

SHEET NO.
0 OF 182

LAYOUT: MODEL | BY: jadams | DATE: 20-SEP-2016 10:27:15 AM
L:\150561-010_Cad\Structural\150561-010 RCB WINGS 8x3.dgn

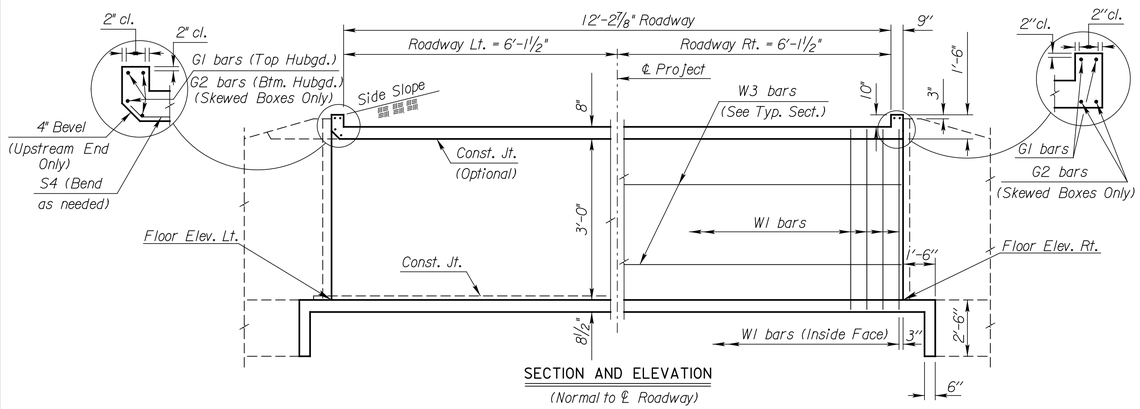

SECTION AND ELEVATION

(Normal to ℄ Roadway)

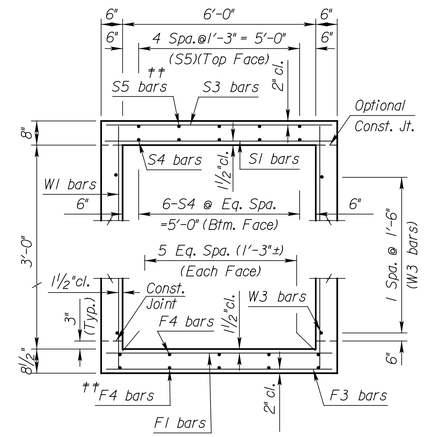

TYPICAL SECTION

STATE	PROJECT NO.	YEAR	SHEET NO.	TOTAL SHEETS
KANSAS	150561-010			

Note:
S3 bars omitted unless grade box or slab thickness is greater than or equal to 12".

Note:
F3 bars omitted unless floor thickness is greater than or equal to 12.".

†† Omit S5 bars when S3 bars are omitted and omit the bottom layer of F4 bars when F3 bars are omitted.

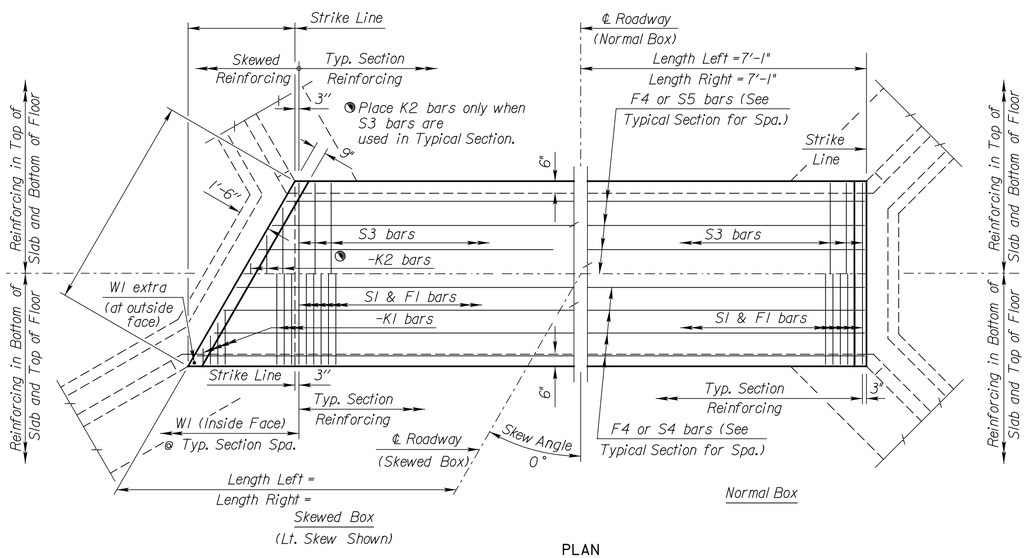

PLAN

GENERAL NOTES

DESIGN SPECIFICATION: AASHTO LRFD Spec., 2007 Ed., 2009 Int.
DESIGN LOADING: HL93
UNIT STRESSES: Grade 4.0 Concrete f'c = 4,000 p.s.i.
Reinforcing Steel fy = 60,000 p.s.i.

FILL HEIGHT: Unless otherwise noted, the Design Fill Height is measured from the riding surface at the culvert and includes the surfacing.

CONCRETE: Use concrete conforming to Grade 4.0 Concrete. Bevel all exposed edges with a ¾" triangular molding. Where Grade 4.0(AE) is specified, place this concrete in the top slab above the Construction Joint.

REINFORCING: Use reinforcing steel conforming to ASTM A615, Grade 60. All dimensions relative to reinforcing steel are to the centerline of the bar unless otherwise noted.

EXCAVATION: Excavation for culverts less than bridge length shall not be paid for directly but shall be subsidiary to Grade 4.0 Concrete. Excavation for RCB bridges shall be paid for as Class III Excavation.

SEAL COURSE: The Engineer may require a seal course. The seal course shall be unreinforced Concrete(Commercial Grade) with a minimum depth of 3 inches or as determined by the Engineer. Concrete for the seal course shall be paid for at the unit price set for Concrete for Seal Course.

FOUNDATION STABILIZATION: The Foundation Stabilization quantity has been calculated to the limits shown on the "RCB Auxiliary Details" sheet. The depth may be increased by the Engineer. The Contractor may underrun Foundation Stabilization under the barrel if founded on firm material and with the Engineer's approval. Use Foundation Stabilization on all wingwalls unless founded on rock or granular material.

QUANTITIES: The quantities shown in the Culvert Summary include apron and/or soil saver quantities when they are required by the plans. Payment for additional quantities that result from including a seal course and/or a floating apron, as a change in the original plans, shall be made at the unit price bid for the various items involved.

GRANULAR BACKFILL (WINGWALLS): See the "Auxiliary Details" sheet.

STRIKE LINE: Construct the wingwalls and that portion of the RCB outside the Strike Line level. Construct the wingwall footings with the culvert floor. See the wingwall detail sheets.

BRIDGE BACKWALL PROTECTION SYSTEM: For structures with this bid item in the Summary of Quantities. See the "Auxiliary Details" sheet.

CULVERT SUMMARY

For design purposes ONLY. Do NOT use for Construction — ◔ includes any welded wire fabric

Floor Elev. Lt.	Floor Elev. Rt.	Crown Gr. Elev.	Design Fill Ht.	Skew	Left Wings	Right Wings	Scour Apron	Soil Saver	Concrete: Barrel (Cu.Yds.)	Concrete: Wings (Cu.Yds.)	Concrete: Total (Cu.Yds.)	Reinf. Steel (Gr. 60): Barrel (Lbs.)	Reinf. Steel (Gr. 60): ◔Wings (Lbs.)	Reinf. Steel (Gr. 60): Total (Lbs.)	LRFR RATING FACTORS HL-93 Loading: Inventory	LRFR RATING FACTORS HL-93 Loading: Operating
821.73	821.48	825.19	2	0	Flared	Flared	Yes	Yes	6.97	8.42	15.39	810	968	1778	1.40	1.81

△ Epoxy Coated Bars

BAR SCHEDULE

△ F1 Size	Spa.	No.	Length		Size	Spa.	No.	Length	△ F3 Size	Spa.	No.	Length	△ F4 Size	No.	Length	△ S1 Size	Spa.	No.	Length		Size	Spa.	No.	Length	△ S3 Size	Spa.	No.	Length	△ S4 Size	No.	Length	△ S5 Size	No.	Length
6	7"	25	6'-8"		N/A	N/A	N/A	N/A	N/A	N/A	N/A	6'-8"	4	6	13'-11"	6	7"	25	6'-8"		N/A	N/A	N/A	N/A	N/A	N/A	N/A	6'-8"	5	6	13'-11"	4	N/A	13'-11"

△ K1 Size	Spa.	No.	Length		Size	Spa.	No.	Length	△ W1 Size	Spa.	No.	Length	△ Size	Spa.	No.	Length	△ W3 Size	No.	Length	△ Size	Spa.	No.	Length	△ G1 Size	No.	Length	△ G2 Size	No.	Length	Size	Spa.	No.	Length
N/A	N/A	N/A			N/A	N/A	N/A		4	9"	38	4'-0"	N/A	N/A	N/A	N/A	4	4	13'-11"	N/A	N/A	N/A	N/A	5	4	6'-8"	N/A	N/A	N/A				

Minimum Splice Lengths	
#4	1'-5"
#5	1'-9"

SUMMARY OF QUANTITIES

Concrete (Grade 4.0)	12.6 C.Y.
Concrete (Grade 4.0)(AE)	2.8 C.Y.
Bridge Backwall Protection System	13 S.Y.
Reinforcing Steel (Gr. 60)	970 Lbs.
Reinforcing Steel (Gr. 60)(Epoxy Coated)	810 Lbs.
Class III Excavation	C.Y.
Foundation Stabilization	8 C.Y.
Concrete for Seal Course (Set)	1 C.Y.
Granular Backfill (Wingwalls)	16 C.Y.

NO.	DATE	REVISIONS	BY	APP'D
1				

KANSAS DEPARTMENT OF TRANSPORTATION
Sta. N/A
SINGLE 6 ft x 3 ft RCB

BR 1.6.3 P — Johnson Co.

FHWA APPROVAL	10-20-10	APP'D	Terry L. Fleck
DESIGNED	DETAILED	QUANTITIES	CADD
DESIGN CK.	DETAIL CK.	QUAN. CK.	CADD CK.

REV.	DATE	REVISIONS	BY	APP'D
5				
4				
3				
2				
1				

Designed By: PRP
Drawn By: JCK/JAA
Checked By: HDL
Issue Date: SEPT. 2016

COPYRIGHT © -2016-SHAFER, KLINE & WARREN INC.

SHAFER, KLINE & WARREN
11250 Corporate Avenue
Lenexa, KS 66219-1392
913.888.7800 FAX: 913.888.7868
SURVEYING | ENGINEERING | CONSTRUCTION

CLEAR CREEK PARKWAY
CITY OF SHAWNEE, KANSAS

6X3 RCB PLAN & ELEVATION

150561-010

SHEET NO.
0 OF 182

LAYOUT: MODEL | BY: jadams | DATE: 20-SEP-2016 10:27:18 AM
L:\150561-010_Cad\Structural\150561-010 RCB 6x3.dgn

STATE	PROJECT NO.	YEAR	SHEET NO.	TOTAL SHEETS
KANSAS	150561-010			

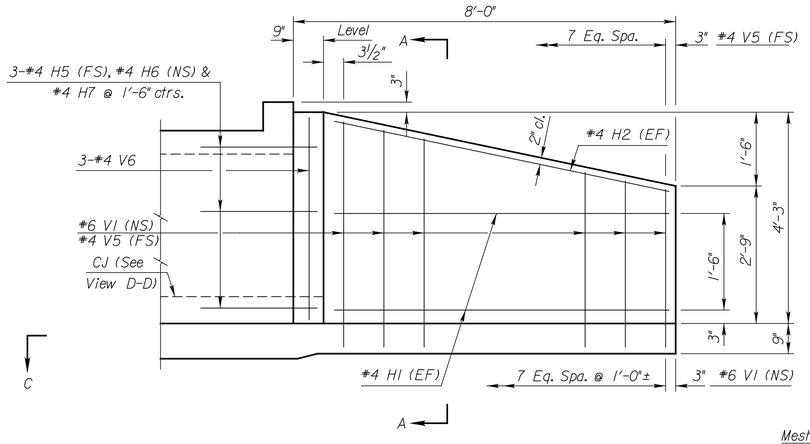

ELEVATION OF WINGWALL

(Backface Shown)

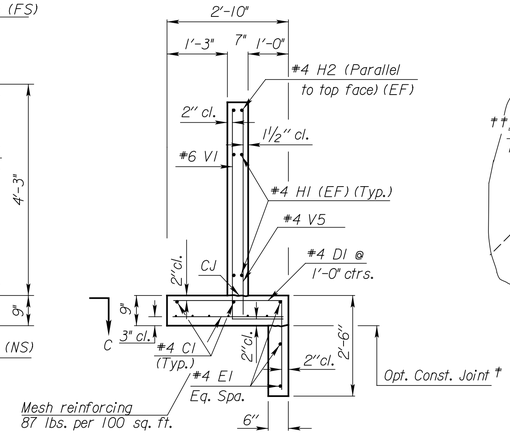

SECTION A-A

See "RCB Aux. Details" sheet for additional requirements.

Typical both wings

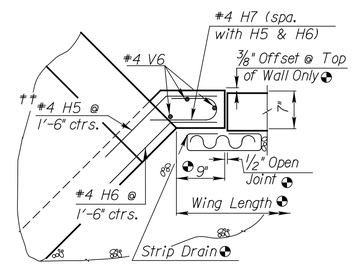

WINGWALL JOINT DETAIL

(Plan View)

† NOTE: Const. Jt. may be used at Contractor's option when approved by the Engineer. D1 bars or mesh may be spliced thus: ⌐ Minimum overlap shall be 1'-3". No increase in quantities or cost shall be allowed when Contractor elects this option.

GENERAL NOTES

DESIGN SPECIFICATION: AASHTO LRFD Spec., 2007 Ed., 2009 Int.
DESIGN LOADING: HL93
UNIT STRESSES: Grade 4.0 Concrete; f'c = 4,000 p.s.i.
Reinforcing Steel; fy = 60,000 p.s.i.
CONCRETE: Grade 4.0 Concrete shall be used throughout. Bevel all exposed edges with a 3/4" triangular moulding.
REINFORCING: All reinforcing shall conform to ASTM A615, Grade 60. Welded Wire Fabric shall conform to ASTM A185. All dimensions relative to reinforcing steel shall be to center-line of bar unless otherwise noted. Wire Reinforcing mesh shall be electrically welded and shall be composed of 6 x 6- W6 x W6 welded wire fabric and shall be classified as pounds of reinforcing and included in the total quantity for the bid item Reinforcing Steel (Gr. 60)
QUANTITIES: Wingwall Quantities include all quantities outside the neat lines of the box, excluding the hubguard.
APRON: A 5" concrete slab shall be constructed between the downstream wings in locations subject to scour only when specified on the plans or by the Engineer.
BACKFILL MATERIAL: Use Granular Backfill material meeting the requirements of SB-1, SB-2, SCA-1, SCA-2. Backfill all wings to limits shown on the "RCB Auxiliary Sheet".
FILTER FABRIC: Separate in-situ material from granular backfill with approved filter fabric complying with Section 1710. Filter Fabric is subsidiary to "Granular Backfill".
FOUNDATION STABILIZATION: Use Foundation Stabilization on all wingwalls unless founded on rock or granular material.

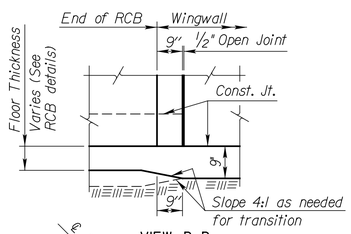

VIEW D-D

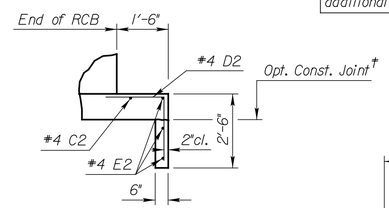

SECTION E-E

NOTE:
EF = Each Face
NS = Near Side
FS = Far Side
CJ = Const. Joint

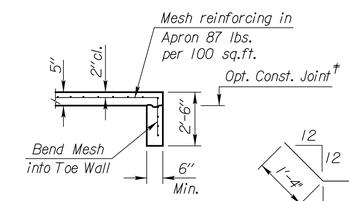

SECTION B-B

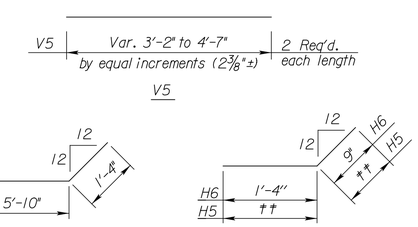

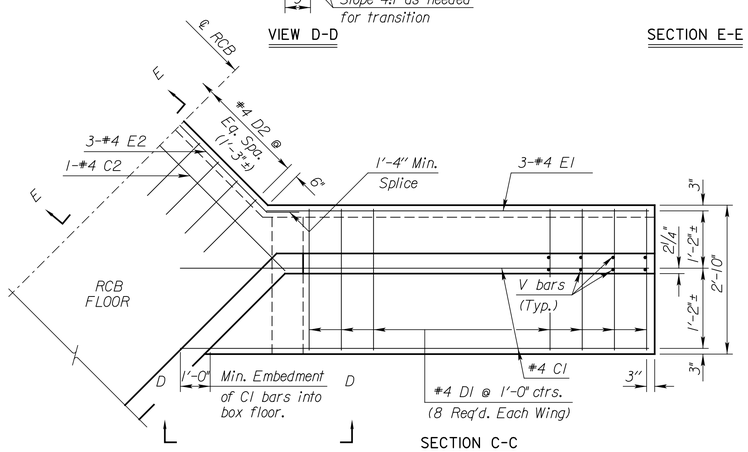

SECTION C-C

(Plan of Footing)

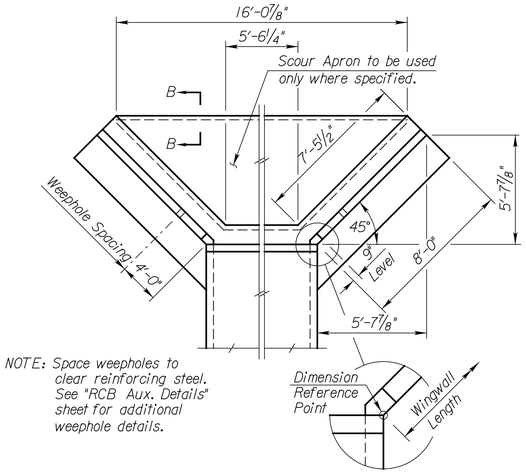

NOTE: Space weepholes to clear reinforcing steel. See "RCB Aux. Details" sheet for additional weephole details.

WING DIMENSIONS FOR NORMAL BOX

(3 1/2:1 Embankment Slope)

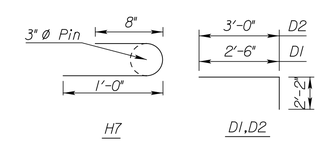

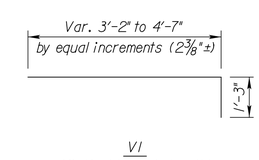

BENDING DIAGRAM

(All dimensions are out to out of bars.)

†† Bend in Field

Quantities listed below are included in the Summary of Quantities shown on the RCB details.

WINGWALL QUANTITIES (One End Only)				
	Foundation Stabilization		Concrete (Gr. 4.0)	
Wingwalls	1.44	(C.Y.)	3.47	(C.Y.)
Apron	0.91	(C.Y.)	1.48	(C.Y.)
Soil Saver	0.72	(C.Y.)	?.??	(C.Y.)
Reinforcing Steel (Gr. 60)			402	Lbs.
Welded Wire Fabric (Wings)			39	Lbs.
Welded Wire Fabric (Apron)			85	Lbs.
Granular Backfill (Wingwalls)			8.00	C.Y.
Filter Fabric (subsidiary)			14.00	S.Y.

NOTE: Reinforcing Bar List is for both wings at one end of box only.

* See Bending Diagram

		#4C1	#4D1	#4E1	#4C2	#4D2	#4E2	#6V1	#4H1	#4H2	#4H5	#4H6	#4H7	#4V5	#4V6
0° Skew	No.	4	16*	6	1	5*	3*	16	8	4	6*	6*	6*	16	6
	Length	9'-10"	4'-8"	7'-3"	6'-8"	5'-2"	8'-6"	*	6'-10"	7'-0"	1'-10"	2'-1"	1'-9"	*	4'-0"

NO.	DATE	REVISIONS	BY	APP'D
5				
4				
3				
2				
1				

KANSAS DEPARTMENT OF TRANSPORTATION
Sta. N/A
FLARED WINGWALLS
3 ft Rise (0°SKEW)

BR 10.00.03 Johnson Co.

FHWA APPROVAL		10-20-10	APP'D	Terry L. Fleck
DESIGNED	DETAILED		QUANTITIES	CADD
DESIGN CK.	DETAIL CK.		QUAN. CK.	CADD CK.

NO.	DATE	REVISIONS	BY	APP'D
5				
4				
3				
2				
1				

Designed By: PRP
Drawn By: JCK/JAA
Checked By: HDL
Issue Date: SEPT. 2016

COPYRIGHT © -2016-SHAFER, KLINE & WARREN INC.

SHAFER, KLINE & WARREN
11250 Corporate Avenue
Lenexa, KS 66219-1392
913.888.7800 FAX: 913.888.7868
SURVEYING | ENGINEERING | CONSTRUCTION

CLEAR CREEK PARKWAY
CITY OF SHAWNEE, KANSAS

6X3 RCB WINGWALL DETAILS

150561-010

SHEET NO.
0 OF 182

LAYOUT: MODEL BY: jadams DATE: 20-SEP-2016 10:27:20 AM
L:\150561-010_Cad\Structural\150561-010 RCB WINGS 6x3.dgn

NOT FOR CONSTRUCTION

23
24
25
PRC +56.74
℄ Clear Creek Parkway
USACE Define Wetland
The Contractor Shall Confine
The Work Area Within The
Slope Limit & Minimize
All Disturbance Within The
Defined Area
Shaded Area of Wetland
Represents The Area
Disturbed By Construction
℄ Retaining Wall
PI +46.03
Existing Power
Pole
PI +15.88
N 69° 28' 08" E
30.15
N 69° 28' 08" E
15.88
S 50° 31' 52" E
22.02
POT +00.00
POT +68.05
NORTH
10 5 0 10

Proposed
Top of Wall
Grade behind
Wall
Proposed Ground Line
at Face of Wall
Leveling Pad
0+00
TW 874.96
0+00
BW 872.63
+12.00
TW 878.29
+22.50
BW 871.96
+27.75
BW 871.29
+36.00
TW 878.29
+48.75
TW 877.63
+48.75
TW 872.96
+64.43
BW 871.29
890
880
870
860
850
0

REV.	DATE	REVISIONS	BY	APP'D
1				
2				
3				
4				
5				

Designed By: PRP
Drawn By: JCK/JAA
Checked By: HDL
Issue Date: SEPT. 2016

COPYRIGHT © -2016-SHAFER, KLINE & WARREN INC.

SHAFER, KLINE & WARREN
11250 Corporate Avenue
Lenexa, KS 66219-1392
913.888.7800 FAX: 913.888.7868
SURVEYING | ENGINEERING | CONSTRUCTION

CLEAR CREEK PARKWAY
CITY OF SHAWNEE, KANSAS

RETAINING WALL PLAN AND PROFILE (1)
RETAINING WALL AROUND POWER POLES

150561-010

SHEET NO.
79 OF 182

LAYOUT: MODEL | BY: jadams | DATE: 20-SEP-2016 10:27:23 AM
L:\150561-010_Cad\Civil\Retaining Walls\150561-010_RET-WALL-01.dgn

NOT FOR CONSTRUCTION

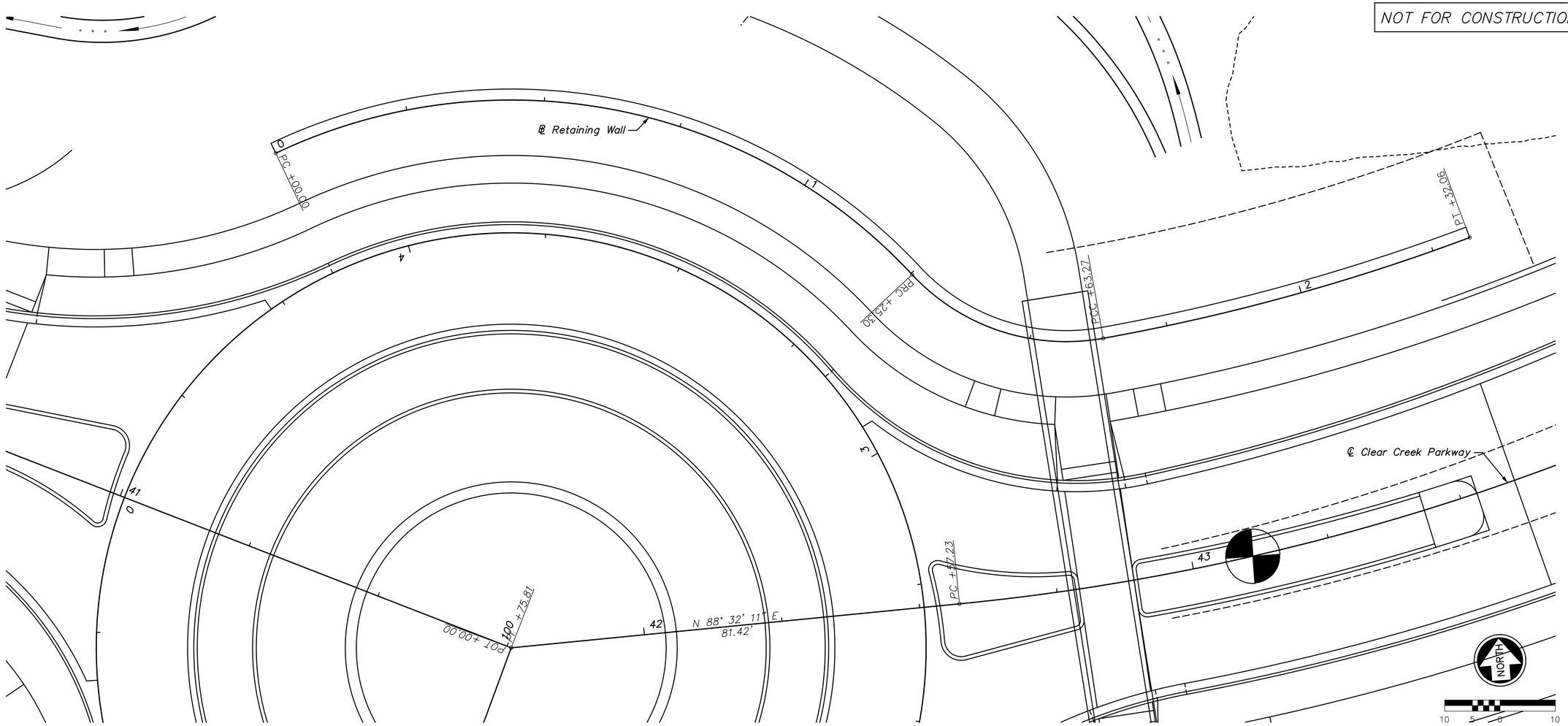

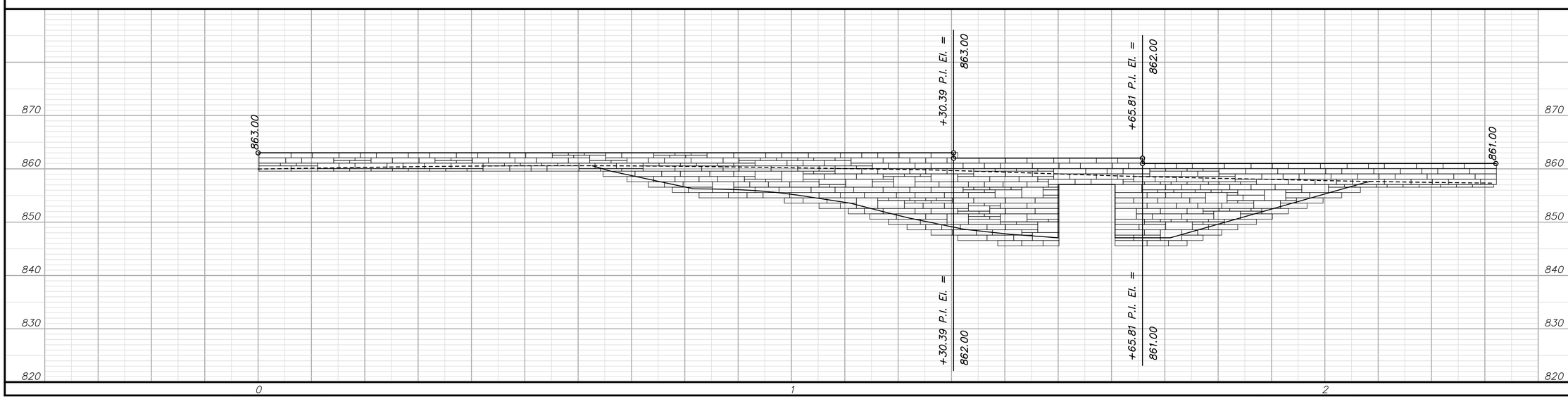

REV.	DATE	REVISIONS	BY	APP'D
5				
4				
3				
2				
1				

Designed By: PRP
Drawn By: JCK/JAA
Checked By: HDL
Issue Date: SEPT. 2016

COPYRIGHT © -2016-SHAFER, KLINE & WARREN INC.

SHAFER, KLINE & WARREN
11250 Corporate Avenue
Lenexa, KS 66219-1392
913.888.7800 FAX: 913.888.7868
SURVEYING | ENGINEERING | CONSTRUCTION

CLEAR CREEK PARKWAY
CITY OF SHAWNEE, KANSAS

RETAINING WALL PLAN AND PROFILE (2)
RETAINING WALL NORTH OF ROUNDABOUT

150561-010

LAYOUT: MODEL | BY: jadams | DATE: 20-SEP-2016 10:27:26 AM
L:\150561-010_Cad\Civil\Retaining Walls\150561-010_RET-WALL-02.dgn

NOT FOR CONSTRUCTION

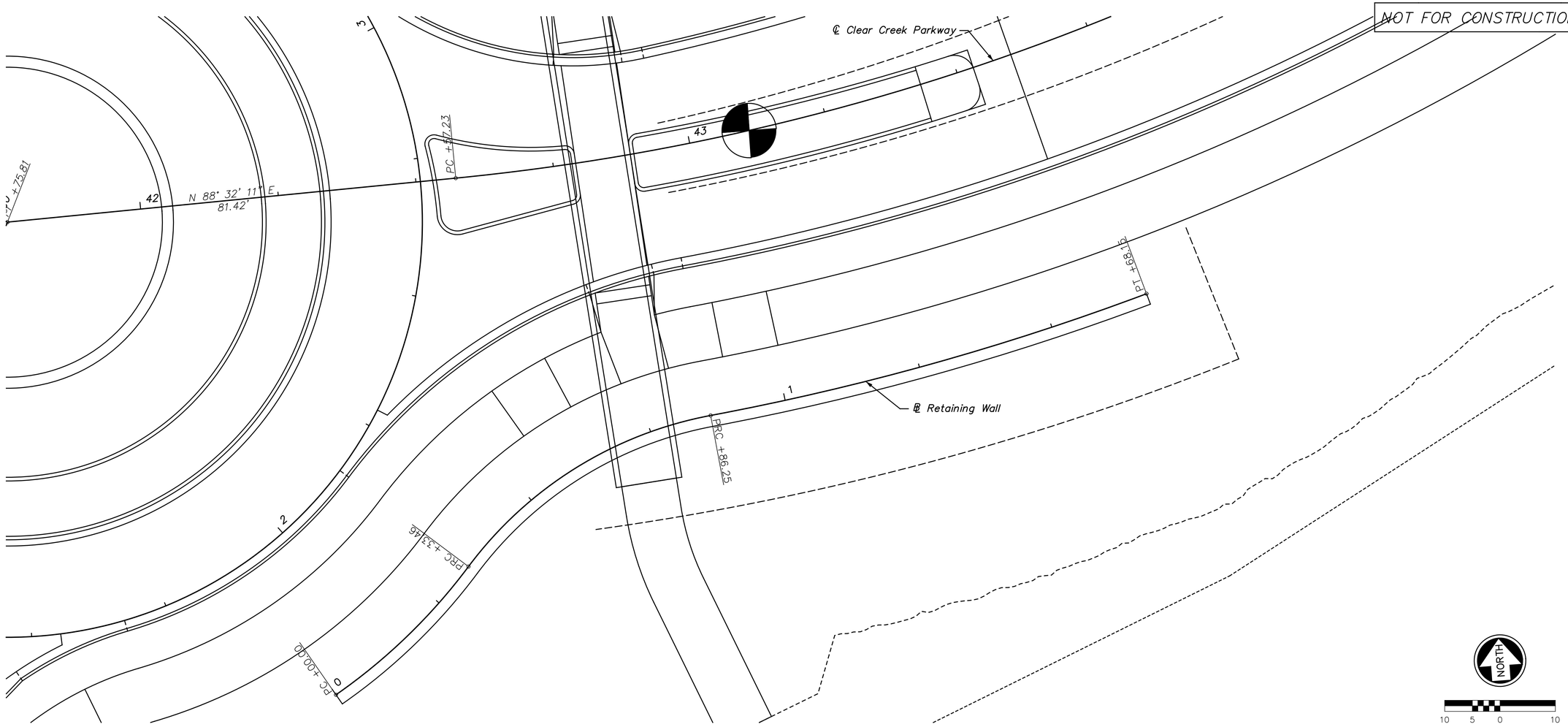

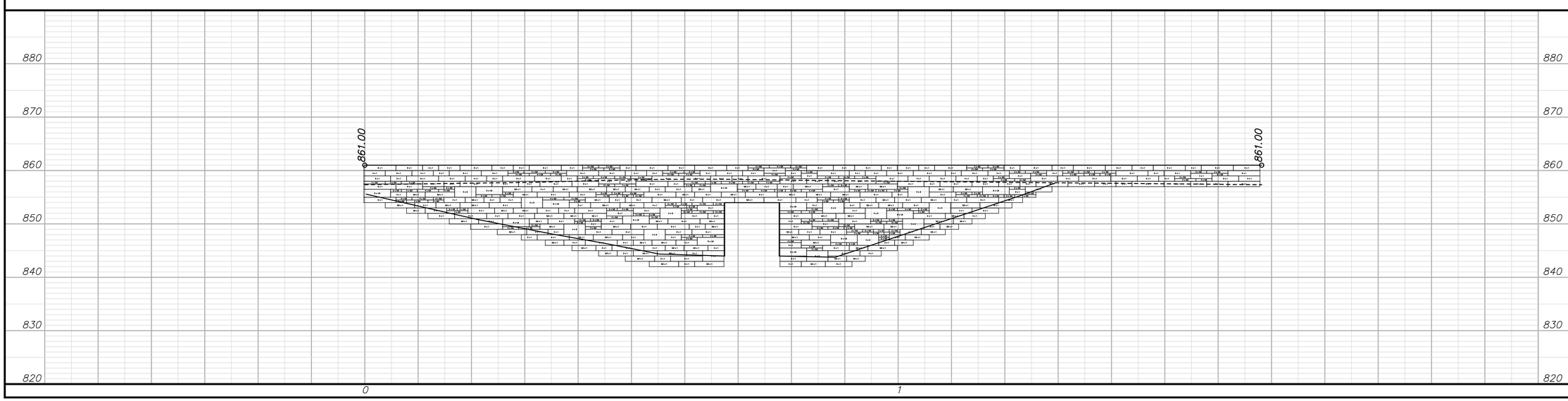

REV.	DATE	REVISIONS	BY	APP'D
1				
2				
3				
4				
5				

Designed By: PRP
Drawn By: JCK/JAA
Checked By: HDL
Issue Date: SEPT. 2016

COPYRIGHT © -2016-SHAFER, KLINE & WARREN INC.

SHAFER, KLINE & WARREN
11250 Corporate Avenue
Lenexa, KS 66219-1392
913.888.7800 FAX: 913.888.7868
SURVEYING | ENGINEERING | CONSTRUCTION

CLEAR CREEK PARKWAY
CITY OF SHAWNEE, KANSAS

RETAINING WALL PLAN AND PROFILE (3)
RETAINING WALL NORTH OF ROUNDABOUT

150561-010

SHEET NO.
81 OF 182

LAYOUT: MODEL | BY: jaddams | DATE: 20-SEP-2016 10:27:28 AM
L:\150561-010_Cad\Civil\Retaining Walls\150561-010_RET-WALL-03.dgn

SPECIFICATION FOR SEGMENTAL RETAINING WALL SYSTEMS

PART 1: GENERAL

1.01 Description

Work includes furnishing and installing segmental retaining wall (SRW) units to the lines and grades designated on the project's final construction drawings or as directed by the Engineer. Also included is furnishing and installing appurtenant materials required for construction of the retaining wall as shown on the construction drawings.

1.02 Reference Standards

A. Segmental Retaining Wall Units

1. ASTM C 1372 – Standard Specification for Segmental Retaining Wall Units
2. ASTM C 140 – Standard Test Methods of Sampling and Testing Concrete Masonry Units

B. Geosynthetic Reinforcement

1. ASTM D 4595 – Tensile Properties of Geotextiles by the Wide–Width Strip Method
2. ASTM D 5262 – Test Method for Evaluating the Unconfined Creep Behavior of Geosynthetics
3. GRI: GG1 – Single Rib Geogrid Tensile Strength
4. GRI: GG5 – Geogrid Pullout

C. Soils

1. ASTM D 698 – Moisture Density Relationship for Soils, Standard Method
2. ASTM D 422 – Gradation of Soils
3. ASTM D 424 – Atterberg Limits of Soil

D. Drainage Pipe

1. ASTM D 3034 – Specification for Polyvinyl Chloride (PVC) Plastic Pipe
2. ASTM D 1248 – Specification for Corrugated Plastic Pipe

E. Engineering Design

1. "NCMA Design Manual for Segmental Retaining Walls", Second Edition

F. Where specifications and reference documents conflict, the Engineer shall make the final determination of applicable document.

1.03 Submittals

A. Material Submittals: The Contractor shall submit manufacturers' certifications two weeks prior to start of work stating that the SRW units and geosynthetic reinforcement meet the requirements of Section 2 of this specification.
B. Design Submittal: The Contractor shall submit two sets of detailed design calculations and final retaining wall plans for approval at least two weeks prior to the beginning of wall construction. All calculations and drawings shall be prepared and sealed by a professional Civil Engineer (P.E.) – (Wall Design Engineer) experienced in SRW design and licensed in the state where the wall is to be built.

1.04 Delivery, Storage and Handling

A. Contractor shall check materials upon delivery to assure that specified type and grade of materials have been received and proper color and texture of SRW units have been received.
B. Contractor shall prevent excessive mud, wet concrete, epoxies, and like materials that may affix themselves, from coming in contact with materials.
C. Contractor shall store and handle materials in accordance with manufacturer's recommendations.
D. Contractor shall protect materials from damage. Damaged materials shall not be incorporated into the retaining wall.

PART 2: MATERIALS

2.01 Segmental Retaining Wall Units

A. SRW units shall be machine formed, Portland Cement concrete blocks specifically designed for retaining wall applications. SRW units currently approved for this project are:

VERSA–LOK Square Foot Retaining Wall Units.

B. Color of SRW units shall be Sandstone Blend.
C. Finish of SRW units shall be Split Face.
D. SRW unit faces shall be Straight.
E. SRW unit height shall be eight inches.
F. SRW units (not including aggregate fill in unit voids) shall provide a minimum weight of 87 psf wall face area.
G. SRW units shall be interlocked with connection pins, designed with proper setback to provide 8:1 vertical to horizontal batter (a 7.12 degree cant from vertical).
H. SRW units shall be capable of being erected with the horizontal gap between adjacent units not exceeding 1/8 inches.
I. SRW units shall be capable of providing overlap of units on each successive course so that walls meeting at corner are interlocked and continuous. SRW units that require corners to be mitered shall not be allowed.
J. SRW units shall be capable of providing a split face, textured surface for all vertical surfaces that will be exposed after completion of wall, including any exposed sides and backs of units.
K. SRW units shall be sound and free of cracks or other defects that would interfere with the proper placing of the unit or significantly impair the strength or permanence of the structure. Cracking or excessive chipping may be grounds for rejection. Units showing cracks longer than 1/2" shall not be used within the wall. Units showing chips visible at a distance of 30 feet from the wall shall not be used within the wall.
L. Concrete used to manufacture SRW units shall have a minimum 28 days compressive strength of 3,000 psi and a maximum moisture absorption rate, by weight, of 8% as determined in accordance with ASTM C1372. Compressive strength test specimens shall conform to the saw–cut coupon provisions of ASTM C140.
M. SRW units' molded dimensions shall not differ more than + 1/8 inch from that specified, in accordance with ASTM C1372.

2.02 Segmental Retaining Wall Unit Connection Pins

A. SRW units shall be interlocked with VERSA–Tuff connection pins. The pins shall consist of glass–reinforced nylon made for the expressed use with the SRW units supplied.

2.03 Geosynthetic Reinforcement

A. Geosynthetic reinforcement shall consist of geogrids or geotextiles manufactured as a soil reinforcement element. The manufacturers/suppliers of the geosynthetic reinforcement shall have demonstrated construction of similar size and types of segmental retaining walls on previous projects.

The geosynthetic type must be approved one week prior to bid opening. Geosynthetic type currently approved for this project is:
VERSA–Grid 3.0, by Strata.

B. The type, strength, and placement location of the reinforcing geosynthetic shall be as determined by the Wall Design Engineer, as shown on the final, P.E. sealed retaining wall plans.

C. In circumstances where the specified geogrid length interferes with a storm structure, geogrid shall be laid flush with structure and turned up with the structure 6". Behind the structure the grid shall be continued 110% of the total distance of grid specified. This shall be done for each layer that geogrid intersects a storm structure.

2.04 Leveling Pad

A. Material for leveling pad shall consist of compacted sand, gravel, or combination thereof (USCS soil types GP,GW, SP, & SW) and shall be a minimum of 6 inches in depth. Lean concrete with a strength of 200–300 psi and three inches thick maximum may also be used as a leveling pad material. The leveling pad should extend laterally at least a distance of 6 inches from the toe and heel of the lowermost SRW unit.

2.05 Drainage Aggregate

A. Drainage aggregate shall be angular, clean stone or granular fill meeting the following gradation as determined in accordance with ASTM D422

Sieve Size	Percent Passing
1 inch	100
3/4 inch	75–100
No. 4	0–60
No. 40	0–50
No. 200	0–5

2.06 Drainage Pipe

A. The drainage collection pipe shall be a perforated or slotted PVC, or corrugated HDPE pipe.

B. Drainage pipe shall be manufactured in accordance with ASTM D 3034 and/or ASTM D 1248

2.07 Reinforced (Infill) Soil

A. The reinforced soil material shall be free of debris. Unless otherwise noted on the final, P.E. sealed, retaining wall plans prepared by the Wall Design Engineer, the reinforced material shall consist of 3/4 inch gravel.

B. The maximum particle size of poorly–graded gravels (GP) (no fines) should not exceed 3/4 inch unless expressly approved by the Wall Design Engineer and the long–term design strength (LTDS) of the geosynthetic is reduced to account for additional installation damage from particles larger than this maximum.

PART 3: DESIGN PARAMETERS

3.01 Soil

A. The following soil parameters were used for the preparation of the final design.

Reinforced Fill ø = 34°; 110 pcf
Retained Soil ø = 22°; 120 pcf
Foundation Soil ø = 22°; 120 pcf

B. Should the actual soil conditions observed during construction differ from those assumed for the design, design shall be reviewed by the Wall Design Engineer at the Owner's Geotechnical Engineer's direction.

3.02 Design

A. The design analysis for the final, P.E. sealed retaining wall plans prepared by the Wall Design Engineer shall consider the external stability against sliding and overturning, internal stability, and facial stability of the reinforced soil mass and shall be in accordance with acceptable engineering practice and these specifications. The internal and external stability analysis shall be performed in accordance with the "NCMA Design Manual for Segmental Retaining Walls", using the recommended minimum factors of safety in this manual.

B. External stability analysis for bearing capacity, global stability, and total and differential settlement shall be the responsibility of the Owner and the Owner's Geotechnical Engineer. Geotechnical Engineer shall perform bearing capacity, settlement estimates, and global stability analysis based on the final wall design provided by the Wall Design Engineer and coordinate any required changes with Wall Design Engineer.

C. While vertical spacing between geogrid layers may vary, it shall not exceed 2.0 feet maximum in the wall design.

D. The geosynthetic placement in the wall design shall have 100 percent continuous coverage parallel to the wall face. Gapping between horizontally adjacent layers of geosynthetic (partial coverage) will not be allowed.

PART 4: CONSTRUCTION

4.01 Inspection

A. The Owner or Owner's Representative is responsible for verifying that the Contractor meets all the requirements of the specification. This includes all submittals for materials and design, qualifications, and proper installation of wall system.

B. Contractor's field construction supervisor shall have demonstrated experience and be qualified to direct all work at the site.

4.02 Excavation

A. Contractor shall excavate to the lines and grades shown on the project grading plans. Contractor shall take precautions to minimize over–excavation. Over–excavation shall be filled with compacted infill material, or as directed by the Engineer/Architect, at the Contractor's expense.

B. Contractor shall verify location of existing structures and utilities prior to excavation. Contractor shall ensure all surrounding structures are protected from the effects of wall excavation. Excavation support, if required, is the responsibility of the Contractor.

4.03 Foundation Preparation

A. Following the excavation, the foundation soil shall be examined by the Owner's Engineer to assure actual foundation soil strength meets or exceeds the assumed design bearing strength. Soils not meeting the required strength shall be removed and replaced with infill soils, as directed by the Owner's Engineer.

B. Foundation soil shall be proofrolled and compacted to 95% standard Proctor density and inspected by the Owner's Engineer prior to placement of leveling pad materials.

4.04 Leveling Pad Construction

A. Leveling pad shall be placed as shown on the final, P.E. sealed retaining wall plans with a minimum thickness of 6 inches. The leveling pad should extend laterally at least a distance of 6 inches from the toe and heel of the lower most SRW unit.

B. Granular leveling pad material shall be compacted to provide a firm, level bearing surface on which to place the first course of units. Well–graded sand can be used to smooth the top 1/4 to 1/2 inch of the leveling pad. Compaction will be with mechanical plate compactors to achieve 95% standard Proctor density (ASTM D 698).

4.05 SRW Unit Installation

A. All SRW units shall be installed at the proper elevation and orientation as shown on the final, P.E. sealed wall plans and details or as directed by the Wall Design Engineer. The SRW units shall be installed in general accordance with the manufacturer's recommendations. The specifications and drawings shall govern in any conflict between the two requirements.

B. First course of SRW units shall be placed on the leveling pad. The units shall be leveled side–to–side, front–to–rear and with adjacent units, and aligned to ensure intimate contact with the leveling pad. The first course is the most important to ensure accurate and acceptable results. No gaps shall be left between the front of adjacent units. Alignment may be done by means of a string line or offset from base line to the back of the units.

C. All excess debris shall be cleaned from top of units and the next course of units installed on top of the units below. Units shall be set back 1" per course.

D. Two VERSA–Tuff connection pins shall be inserted through the pin holes of each upper course unit into receiving slots in lower course units. Pins shall be fully seated in the pin slot below. Units shall be pushed forward to remove any looseness in the unit–to–unit connection.

E. Prior to placement of next course, the level and alignment of the units shall be checked and corrected, where needed.

F. Layout of curves and corners shall be installed in accordance with the wall plan details or in general accordance with SRW manufacturer's installation guidelines. Walls meeting at corners shall be interlocked by overlapping successive courses.

G. Procedures C. through F. shall be repeated until reaching top of wall units, just below the height of the cap units. Geosynthetic reinforcement, drainage materials, and reinforced backfill shall be placed in sequence with unit installation as described in Section 4.06, 4.07, and 4.08.

4.06 Geosynthetic Reinforcement Placement

A. All geosynthetic reinforcement shall be installed at the proper elevation and orientation as shown on the final, P.E. sealed retaining wall plan profiles and details, or as directed by the Wall Design Engineer.

B. At the elevations shown on the final plans, (after the units, drainage material, and backfill have been placed to this elevation) the geosynthetic reinforcement shall be laid horizontally on compacted infill and on top of the concrete SRW units, to within one inch of the front face of the unit below. Embedment of the geosynthetic in the SRW units shall be consistent with SRW manufacturer's recommendations. Correct orientation of the geosynthetic reinforcement shall be verified by the Contractor to be in accordance with the geosynthetic manufacturer's recommendations. The highest strength direction of the geosynthetic must be perpendicular to the wall face.

C. Geosynthetic reinforcement layers shall be one continuous piece for their entire embedment length. Splicing of the geosynthetic in the design strength direction (perpendicular to the wall face) shall not be permitted. Along the length of the wall, horizontally adjacent sections of geosynthetic reinforcement shall be butted in a manner to assure 100 percent coverage parallel to the wall face.

D. Tracked construction equipment shall not be operated directly on the geosynthetic reinforcement. A minimum of 6 inches of backfill is required prior to operation of tracked vehicles over the geosynthetic. Turning should be kept to a minimum. Rubber–tired equipment may pass over the geosynthetic reinforcement at slow speeds (less than 5 mph).

E. The geosynthetic reinforcement shall be free of wrinkles prior to placement of soil fill. The nominal tension shall be applied to the reinforcement and secured in place with staples, stakes or by hand tensioning until reinforcement is covered by six inches of fill.

4.07 Drainage Materials

A. Drainage aggregate shall be installed to the line, grades, and sections shown on the final P.E. sealed retaining wall plans. Drainage aggregate shall be placed to the minimum thickness shown on the construction plans between and behind units (a minimum of one cubic foot for each exposed square foot of wall face unless otherwise noted on the final wall plans).

B. Drainage collection pipes shall be installed to maintain gravity flow of water outside the reinforced soil zone. The drainage collection pipe shall daylight into a storm sewer or along a slope, at an elevation lower than the lowest point of the pipe within the aggregate drain.

4.08 Backfill Placement

A. The reinforced backfill shall be placed as shown in the final wall plans in the maximum compacted lift thickness of 10 inches and shall be compacted to a minimum of 95% of standard Proctor density (ASTM D 698) at a moisture content within 2% of optimum. The backfill shall be placed and spread in such a manner as to eliminate wrinkles or movement of the geosynthetic reinforcement and the SRW units.

B. Only hand–operated compaction equipment shall be allowed within 3 feet of the back of the wall units. Compaction within the 3 feet behind the wall units shall be achieved by at least three (3) passes of a lightweight mechanical tamper, plate, or roller.

C. At the end of each day's operation, the Contractor shall slope the last level of backfill away from the wall facing and reinforced backfill to direct water runoff away from the wall face.

D. At completion of wall construction, backfill shall be placed level with final top of wall elevation. If final grading, paving, landscaping, and/or storm drainage installation adjacent to the wall is not placed immediately after wall completion, temporary grading and drainage shall be provided to ensure water runoff is not directed at the wall nor allowed to collect or pond behind the wall until final construction adjacent to the wall is completed.

4.09 SRW Caps

A. SRW caps shall be properly aligned and glued to underlying units with adhesive, a flexible, high–strength concrete adhesive. Rigid adhesive or mortar are not acceptable.

B. Caps shall overhang the top course of units by 3/4 to 1 inch. Slight variation in overhang is allowed to correct alignment at the top of the wall.

4.10 Construction Adjacent to Completed Wall

A. The Owner or Owner's Representative is responsible for ensuring that construction by others adjacent to the wall does not disturb the wall or place temporary construction loads on the wall that exceed design loads, including loads such as water pressure, temporary grades, or equipment loading. Heavy paving or grading equipment shall be kept a minimum of three feet behind the back of the wall face. Equipment with wheel loads in excess of 150 psf live load shall not be operated within 10 feet of the face of the retaining wall during construction adjacent to the wall. Care should be taken by the General Contractor to ensure water runoff is directed away from the wall structure until final grading and surface drainage collection systems are completed.

4.11 Coordination of Construction

A. Contractor shall coordinate construction of walls with utilities such as not to interfere.

4.12 Design

A. This drawing set shall be the design and shop drawing for the wall as long as materials specified here in are incorporated in the project.

B. All dimensions to top face of wall.

REV.	DATE	REVISIONS	BY	APP'D
1				
2				
3				
4				
5				

Designed By: PRP
Drawn By: JCK/JAA
Checked By: HDL
Issue Date: SEPT. 2016

COPYRIGHT © –2016–SHAFER, KLINE & WARREN INC.

SHAFER, KLINE & WARREN
11250 Corporate Avenue
Lenexa, KS 66219-1392
913.888.7800 FAX: 913.888.7868
SURVEYING | ENGINEERING | CONSTRUCTION

CLEAR CREEK PARKWAY
CITY OF SHAWNEE, KANSAS

SEGMENTAL RETAINING WALL
GENERAL NOTES

150561–010

SHEET NO.
0 OF 182

LAYOUT: MODEL | BY: jadams | DATE: 20–SEP–2016 10:27:31 AM
L:\150561–010_Cad\Structural\150561–010 NOTES.dgn

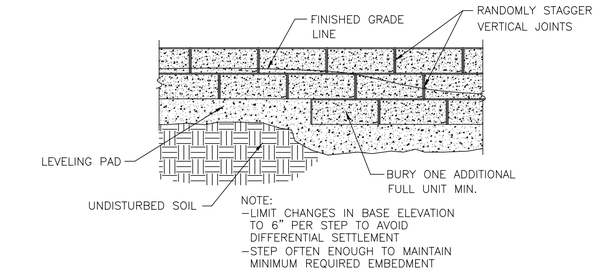

STEPPING BASE DETAIL

SCALE: NONE

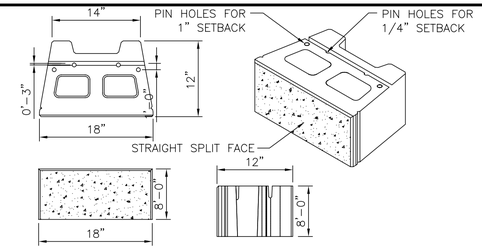

VERSA-LOK UNIT SQUARE FOOT UNIT

UNIT DIMENSIONS
SCALE: NONE

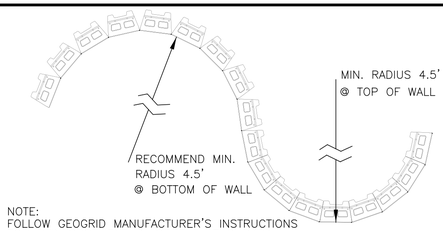

NOTE:
FOLLOW GEOGRID MANUFACTURER'S INSTRUCTIONS FOR REINFORCEMENT PLACEMENT AT CURVES AND CORNERS.

CURVE DETAIL

TYPICAL CURVES

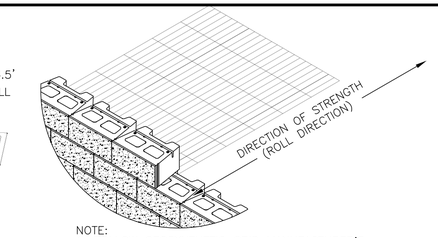

NOTE:
1. FOLLOW GEOSYNTHETIC GRID MANUFACTURER'S INSTALLATION INSTRUCTIONS AND SPECIFICATIONS
2. GEOGRID LENGTH AND ELEVATION PLACEMENT SHALL BE DETERMINED BY PROJECT ENGINEER

GEOSYNTHETIC INSTALLATION DETAIL

SCALE: NONE

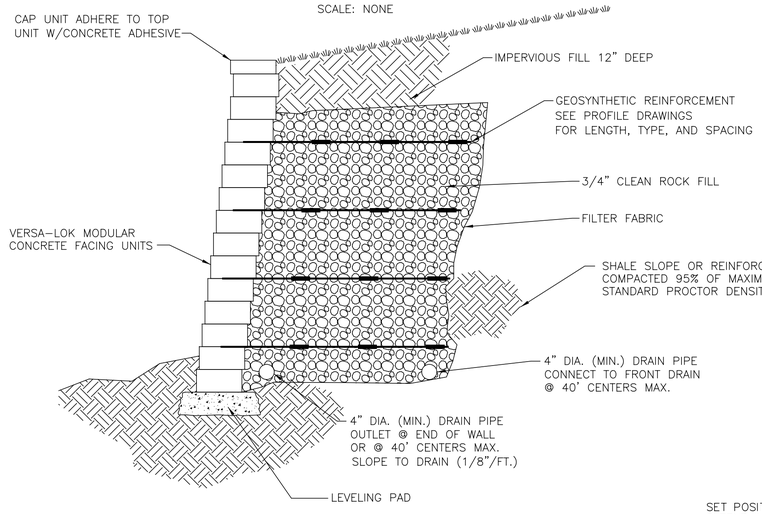

TYPICAL SECTION–REINFORCED GRAVEL RETAINING WALL

MODULAR CONCRETE UNIT
SCALE: NONE

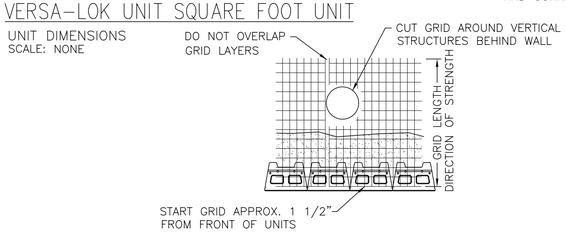

NOTE:
1. FOLLOW GEOSYNTHETIC GRID MANUFACTURER'S INSTALLATION INSTRUCTIONS AND SPECIFICATIONS
2. GEOGRID LENGTH AND ELEVATION PLACEMENT SHALL BE DETERMINED BY PROJECT ENGINEER

GEOSYNTHETIC AT STRUCTURES BEHIND WALL

SCALE: NONE

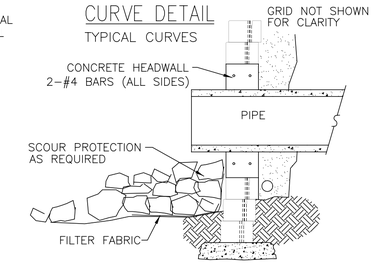

WALL W/ PIPE PENETRATION

SECTION
SCALE: NONE

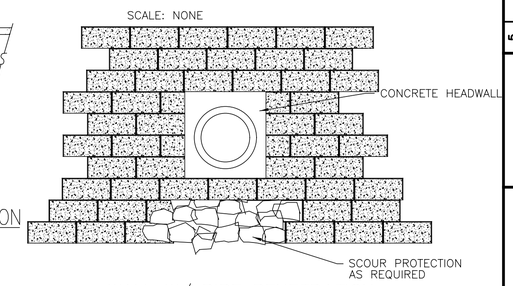

WALL W/ PIPE PENETRATION

PROFILE
SCALE: NONE

1" SETBACK PINNING DETAIL

CROSS SECTION
SCALE: NONE

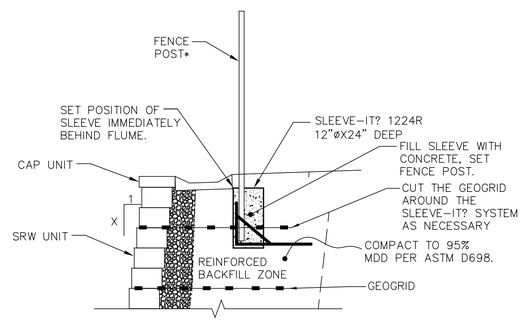

*FENCING SYSTEMS APPROVED FOR USE WITH SLEEVE-IT? 1224R ARE LIMITED TO THE FOLLOWING HEIGHTS: CHAIN LINK – UP TO 8-FT, PRIVACY – UP TO 6-FT (WOODEN, PVC, METAL). POST SIZE 4"X4" MAX.

DETAIL OF FENCE POST INSTALLATION USING SLEEVE-IT™ 1224R

N.T.S.
(BY OTHERS)

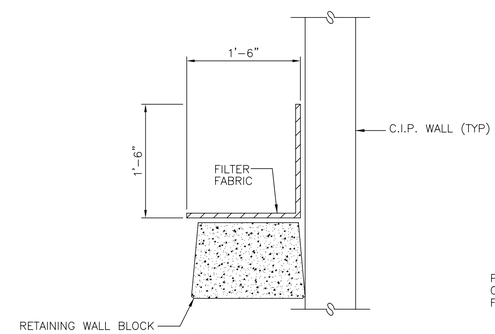

SRW BLOCK TO C.I.P. WALL SEAL

NOT TO SCALE

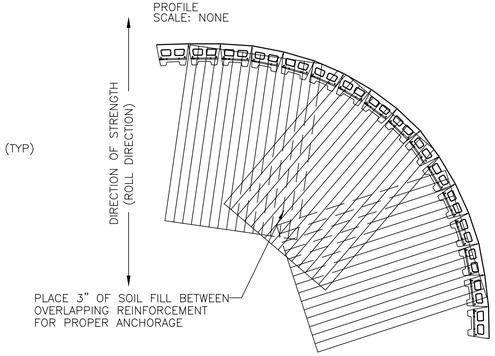

GEOSYNTHETIC PLACEMENT – CONVEX CURVE

SCALE: NONE

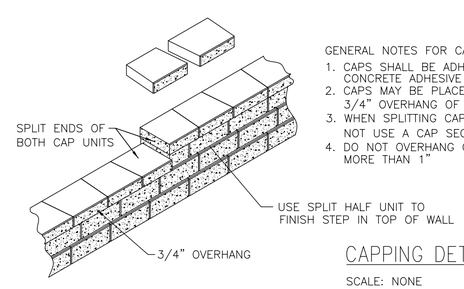

GENERAL NOTES FOR CAPPING:
1. CAPS SHALL BE ADHERED TO WALL USING CONCRETE ADHESIVE
2. CAPS MAY BE PLACED WITH A 1/2" TO 3/4" OVERHANG OF TOP COURSE
3. WHEN SPLITTING CAP UNIT FOR WALL END DO NOT USE A CAP SECTION LESS THAN 6" WIDE
4. DO NOT OVERHANG CAP AT END OF COURSE MORE THAN 1"

CAPPING DETAIL

SCALE: NONE

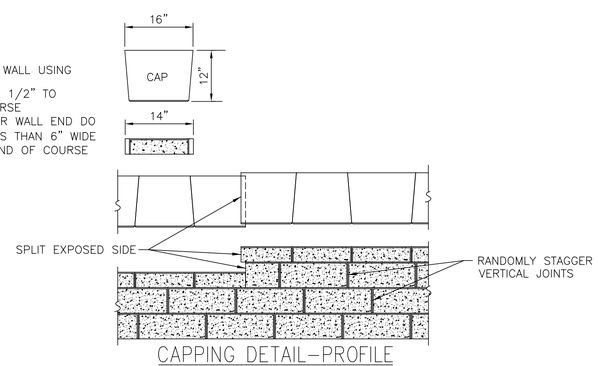

CAPPING DETAIL–PROFILE

STEP AT TOP OF WALL
SCALE: NONE

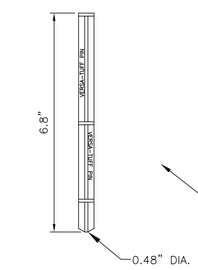

VERSA-TUFF PIN

PIN DIMENSIONS
SCALE: NONE

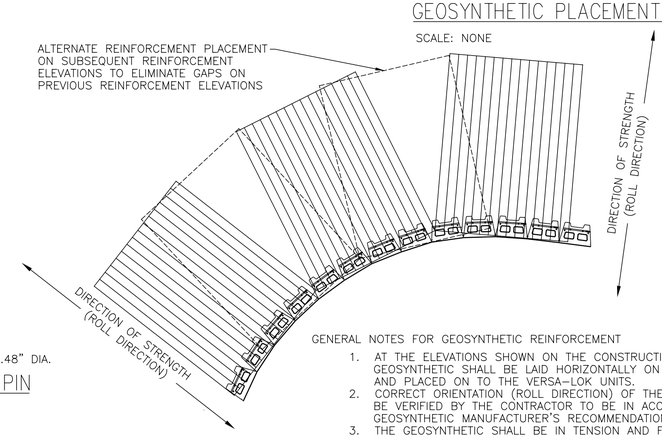

GENERAL NOTES FOR GEOSYNTHETIC REINFORCEMENT
1. AT THE ELEVATIONS SHOWN ON THE CONSTRUCTION PLANS, THE GEOSYNTHETIC SHALL BE LAID HORIZONTALLY ON COMPACTED SOIL FILL AND PLACED ON TO THE VERSA-LOK UNITS.
2. CORRECT ORIENTATION (ROLL DIRECTION) OF THE GEOSYNTHETIC SHALL BE VERIFIED BY THE CONTRACTOR TO BE IN ACCORDANCE WITH THE GEOSYNTHETIC MANUFACTURER'S RECOMMENDATIONS.
3. THE GEOSYNTHETIC SHALL BE IN TENSION AND FREE OF WRINKLES PRIOR TO PLACEMENT OF SOIL FILL.
4. NOMINAL TENSION SHALL BE APPLIED TO THE GEOSYNTHETIC AND SECURED IN PLACE WITH STAPLES, STAKES OR BY HAND TENSIONING UNTIL THE GEOSYNTHETIC IS COVERED BY SIX INCHES OF SOIL FILL.

GEOSYNTHETIC PLACEMENT – CONCAVE CURVE

SCALE: NONE

REV.	DATE	REVISIONS	BY	APP'D
1				
2				
3				
4				
5				

Designed By: PRP
Drawn By: JCK/JAA
Checked By: HDL
Issue Date: SEPT. 2016

COPYRIGHT © -2016-SHAFER, KLINE & WARREN INC.

SHAFER, KLINE & WARREN
11250 Corporate Avenue
Lenexa, KS 66219-1392
913.888.7800 FAX: 913.888.7868
SURVEYING | ENGINEERING | CONSTRUCTION

CLEAR CREEK PARKWAY
CITY OF SHAWNEE, KANSAS

SEGMENTAL RETAINING WALL DETAILS

150561-010

LAYOUT: MODEL | BY: jadams | DATE: 20-SEP-2016 10:27:34 AM
L:\150561-010_Cad\Structural\150561-010 DTLS.dgn

SPECIFICATION FOR SEGMENTAL RETAINING WALL SYSTEMS

PART 1: GENERAL

1.01 DESCRIPTION

THE WORK CONSISTS OF SUPPLYING AND INSTALLING ALL ASPECTS OF THE MAGNUMSTONE? PRECAST MECHANICALLY STABILIZED EARTH (MSE) UNITS AS SPECIFIED IN THE CONSTRUCTION DRAWINGS OR AS ESTABLISHED BY THE OWNER, ARCHITECT OR ENGINEER.

1.02 RELATED WORK
A. SECTION 02100 SITE PREPARATION
B. SECTION 02200 EARTHWORK
C. SECTION 02070 GEOSYNTHETIC REINFORCEMENT WALLS
D. SECTION 02832 MSE WALLS
E. SECTION 01270 UNIT PRICES

1.03 REFERENCE STANDARDS
A. ENGINEERING DESIGN
AASHTO M288 GEOTEXTILE SPECIFICATION FOR HIGHWAY APPLICATIONS
AASHTO STANDARD SPECIFICATIONS FOR HIGHWAY BRIDGES
ASTM C 140 SAMPLE & TESTING CONCRETE MASONRY UNITS
ASTM C 1262 EVALUATION THE FREEZE-THAW DURABILITY OF MANUFACTURED CONCRETE MASONRY UNITS AND RELATED CONCRETE UNITS
ASTM C 1372 STANDARD SPECIFICATION FOR MECHANICALLY STABILIZED EARTH (MSE) UNITS

B. GEOSYNTHETIC REINFORCEMENT
ASTM D 4595 TENSILE PROPERTIES OF GEOSYNTHETICS BY THE WIDE WIDTH STRIP METHOD
ASTM D 5262 EVALUATING THE UNCONFINED CREEP OF GEOSYNTHETICS
ASTM D 6638 GRID CONNECTION STRENGTH (MSEU-1)
ASTM D 6916 GRID SHEAR STRENGTH (MSEU-2)
GRI GG 1 SINGLE RIB GEOGRID TENSILE STRENGTH
GRI GG 4 DETERMINATION OF LONG TERM DESIGN STRENGTH OF GEOGRIDS
GRI GG 5 DETERMINATION OF GEOGRID (SOIL) PULLOUT
GRI GG 6 DETERMINATION OF GEOTEXTILE (SOIL) PULLOUT

C. SOILS
ASTM D 698 TEST METHODS FOR LABORATORY COMPACTION CHARACTERISTICS OF SOIL USING STANDARD EFFORT
ASTM D 422 GRADATION ANALYSIS OF SOIL PARTICLES
ASTM D 4318 TEST METHODS FOR LIQUID LIMIT, PLASTIC LIMIT AND PLASTICITY INDEX OF SOILS
ASTM D 51 TESTING METHODS FOR MEASURING PH OF SOIL
ASTM D 2487 STANDARD CLASSIFICATION OF SOILS (UNIFIED SOIL CLASSIFICATION SYSTEM)

D. DRAINAGE PIPE
ASTM D 3034 SPECIFICATION FOR TYPE PSM POLYVINYL CHLORIDE (PVC) PIPE
ASTM D 1248 CORRUGATED PLASTIC PIPE
THE OWNER OR OWNER'S REPRESENTATIVE SHALL DETERMINE THE FINAL APPLICATION IF THE SPECIFICATIONS AND REFERENCE DOCUMENTS CONFLICT.

1.04 DESIGN SUBMITTALS
A. MATERIAL INSTALLATION AND DESCRIPTION DATA SHOULD BE SUBMITTED FOR EACH PRODUCT SPECIFIED
B. THE MSE DESIGNS AND DRAWINGS SHOULD INCLUDE GEOSYNTHETIC LAYOUT, BOTTOM AND TOP OF WALL ELEVATION, DRAINAGE DETAILS AND ANY OTHER UNIQUE APPLICATIONS.
C. DESIGN METHOD AND CALCULATIONS SHOULD BE IN ACCORDANCE WITH THE AASHTO STANDARD SPECIFICATIONS FOR HIGHWAYS. GLOBAL STABILITY ANALYSIS SHOULD BE CALCULATED AS PART OF THE FINAL DESIGN.
D. SAMPLES OF THE MSE UNITS, COLOR AND TEXTURE SHOULD BE SUBMITTED AS PER DESIGN SPECIFICATIONS. GEOSYNTHETIC SAMPLE SHOULD ALSO BE FURNISHED AS PER DESIGN.
E. ALL TEST REPORTS SHOULD BE IN ACCORDANCE WITH ASTM C 140 AND PERFORMED BY AN INDEPENDENT LABORATORY.
G. DELIVERY, STORAGE AND HANDLING
F. THE CONTRACTOR SHALL INSPECT ALL MATERIALS DELIVERED TO THE SITE TO ENSURE PROPER TYPE AND GRADE OF MATERIALS HAVE BEEN RECEIVED AS PER THE PROJECT SPECIFICATIONS.
G. THE CONTRACTOR SHALL ENSURE PROPER STORAGE, HANDLING AND PROTECTION FROM DAMAGE OF THE MATERIALS. DAMAGED MATERIALS SHALL NOT BE USED IN THE CONSTRUCTION OF THE MECHANICALLY STABILIZED EARTH.
H. THE CONTRACTOR SHALL PREVENT EXCESSIVE MUD, WET CONCRETE, AND LIKE MATERIALS FROM COMING IN CONTACT WITH THE WALL MATERIALS.

PART 2: MATERIALS

2.01 CONCRETE MECHANICALLY STABILIZED EARTH (MSE) UNITS
A. MSE CONCRETE UNITS SHALL BE MAGNUMSTONE? UNITS AS MANUFACTURED BY LICENSED MIDWEST PRODUCTS GROUP PRODUCER IN ACCORDANCE WITH NPCA, ASTM OR AASHTO STANDARDS AND CONFORM AS PER PROJECT ENGINEER SPECIFICATIONS.
B. MAGNUMSTONE? UNITS SHALL HAVE A MINIMUM 28 DAYS COMPRESSIVE OF EQUAL TO 25 MPA (OR GREATER IF SPECIFIED) AND A MAXIMUM ABSORPTION OF 5 PCF (OR LESS IF SPECIFIED) (ASTM C 140). FINAL COMPRESSIVE STRENGTH SHALL BE 40 MPA MIN AVERAGE FOR 3 UNITS. (SUGGESTED AIR CONTENT OF 5 +_ 1 % WITH SLUMP 50 +- 20 MM)
C. COLOR FOR THE MAGNUMSTONE? UNITS SHALL BE GREY/PLAIN CONCRETE.
D. ASTM C 1262 SHALL BE STANDARD FOR AREAS SUBJECT TO MANY FREEZE-THAW CYCLES.
E. THE MAXIMUM WATER ABSORPTION SHALL BE LESS THAN 5% AND THE HEIGHT DIMENSIONS FROM FRONT TO BACK PLUS OR MINUS 1/8TH OF AN INCH AND END TO END WILL NOT VARY MORE THAN PLUS OR MINUS 1/4 OF AN INCH OVER 4 FEET. ALL OTHER SPECIFICATIONS MUST MEET THE ASTM C 1372.
F. THE MAGNUMSTONE? 2-4 UNITS SHALL HAVE A FACE AREA OF 8 SQ FT (.75 SQ M) AND MAGNUMSTONE? 1-4 UNITS SHALL HAVE A FACE AREA OF 4 SQ FT (.37.5 SQ M)
G. THE MAGNUMSTONE? UNIT WEIGHT SHALL BE APPROXIMATELY +-1400 LBS WITH A COMBINED UNIT/GRAVEL INFILL OF +-800 LBS.
H. THE MAGNUMSTONE? UNITS SHALL BE SOUND AND FREE OF CRACKS, CHIPS OR OTHER DEFECTS THAT MAY PREVENT THE CONTRACTOR FROM PROPERLY INSTALLING THE WALL UNITS OR REDUCE THE LONG TERM STRENGTH OF THE WALL STRUCTURE.
I. MAGNUMSTONE? CAPPING UNITS SHALL BE A REGULAR UNIT WITH 8 INCHES OF THE BACK OF THE UNIT REMOVED TO ALLOW FOR SOIL MATERIALS PLACED OVER THE HOLLOW UNITS AND UP AGAINST THE BACK OF THE FRONT FACE.
J. CONCRETE SAMPLE IN ACCORDANCE WITH AASHTO T-141, COMPRESSION TEST IN ACCORDANCE WITH AASHTO T-23 AND AASHTO T-22, AIR CONTENT TESTING IN ACCORDANCE WITH AASHTO T-152 OR AASHTO T-196, SLUMP TEST IN ACCORDANCE WITH AASHTO T-119, 28 DAY TESTING IN ACCORDANCE WITH AASHTO T-23 AND AASHTO T-22 OR AS SPECIFIED BY THE PROJECT ENGINEER.
K. REINFORCING MESH ? REINFORCING MESH (IF REQUIRED) SHALL BE SHOP-FABRICATED OF COLD DRAWN STEEL WIRE CONFORMING TO THE MINIMUM REQUIREMENTS OF ASTM A-82 (AASHTO M-32) AND SHALL BE WELDED INTO THE FINISHED MESH FABRIC IN ACCORDANCE WITH ASTM A-185 (ASSHTO M-55). GALVANIZATION SHALL BE APPLIED AFTER THE MESH IS FABRICATED AND CONFORM TO THE MINIMUM REQUIREMENTS OF ASTM A-123 (AASHTO M-111). CONNECTOR BARS SHALL BE FABRICATED OF COLD DRAWN STEEL WIRE CONFORMING TO THE REQUIREMENTS OF ASTM A-82 (AASHTO M-32) AND GALVANIZED IN ACCORDANCE WITH ASTM A-123 (AASHTO M-111).
L. ELECTROCHEMICAL REQUIREMENTS IF APPLICABLE WILL FOLLOW THE AASHTO SPECIFICATIONS.

2.02 GEOSYNTHETIC REINFORCEMENTS

A. GEOSYNTHETIC REINFORCEMENTS SHALL BE HIGH TENSILE GEOGRID OR GEOTEXTILE MANUFACTURED FOR SOIL REINFORCEMENT APPLICATIONS.
B. APPROVED GEOSYNTHECTICS ARE STRATAGRID SG 350, SG 500 & SG700 AS PER PLANS.
C. GEOSYNTHETICS SHALL BE EVALUATED IN ACCORDANCE WITH THE AASHTO SPECIFICATIONS.

2.03 FOUNDATION SOIL

A. THE FOUNDATION SOILS SHALL BE UNDISTURBED NATIVE SITE SOILS.
B. THE FOUNDATION SOILS SHALL BE INSPECTED AND TESTED BY THE OWNERS GEOTECHNICAL ENGINEER BEFORE INSTALLING BASE LEVELING GRAVEL.
C. DISTURBED OR UNSUITABLE FOUNDATION SOILS SHALL BE PROPERLY COMPACTED OR REPLACED WITH EXPECTABLE SOILS AS SPECIFIED BY THE OWNERS GEOTECHNICAL ENGINEER.

2.04 BACKFILL MATERIALS

A. BACKFILL SOILS SHALL BE FREE OF ORGANIC MATERIALS AND OTHER UNSUITABLE MATERIALS.
B. SOILS CLASSIFIED AS GP, GW TYPES AND ACCORDANCE WITH ASTM D 2487 ARE SUITABLE. ALL SOILS SHALL BE ? CRUSHED STONE APPROVED BY THE ENGINEER.
C. HAVE NOT MORE THAN 10% PASSING THROUGH THE NO. 200 SIEVE.

2.05 BASE LEVELING MATERIALS

A. THE BASE LEVELING GRAVEL SHALL BE WELL GRADED COMPACTED GRAVEL (GW)
B. UNREINFORCED CONCRETE BASE LEVELING PAD CAN ALSO BE USED IF SPECIFIED.
C. AASHTO SPECIFICATIONS WILL BE FOLLOWED WHEN CONSTRUCTING CONCRETE FOOTING FOR DOT PROJECTS.

2.06 DRAINAGE AND UNIT INFILL AGGREGATE

A. DRAINAGE AGGREGATE SHALL BE CLEAN CRUSHED GRAVEL MEETING THE GRADATION IN ACCORDANCE WITH ASTM D 448.
B. DRAINAGE AGGREGATES SHALL BE PLACED IN ALL UNIT VOIDS AND BEHIND THE WALL UNITS WITH UNIFORM PARTICLE SIZE LESS THAN 3/4 (25MM) AND NOT MORE THAN 5% PASSING THROUGH THE NO. 200 SIEVE.

2.07 DRAINAGE PIPE

A. DRAINAGE PIPE SHALL BE PERFORATED PVC OR CORRUGATED HDPE PIPE WITH A MINIMUM SIZE OF 4 INCHES IN DIAMETER.
B. GEOTEXTILES WRAP AROUND THE DRAINAGE PIPE SHALL BE USED.
C. DRAINAGE PIPE SHALL BE MANUFACTURED IN ACCORDANCE WITH ASTM D 3034 AND/OR ASTM D 1248.

2.08 GEOTEXTILE FABRIC

A. THE GEOTEXTILES SHALL BE NON-WOVEN.
B. THE GEOTEXTILES WHEN USED AS A SOIL SEPARATOR SHALL BE PERMEABLE ALLOWING WATER TO EFFECTIVELY PASS THROUGH THE FABRIC OPENINGS.

2.09 AASHTO

WHEN CONSTRUCTING DOT PROJECTS ALL AASHTO AND ASTM SPECIFICATIONS SHOULD BE FOLLOWED UNLESS OTHERWISE SPECIFIED BY THE ENGINEER.

PART 3 WALL DESIGN

3.01 DESIGN STANDARD

A. THE WALL DESIGN ENGINEER AND/OR GEOTECHNICAL ENGINEER SHALL CONSIDER THE INTERNAL, LOCAL STABILITY, EXTERNAL STABILITY, BEARING CAPACITY AND GLOBAL STABILITY OF THE SOIL MASS ABOVE, BEHIND AND BELOW THE WALL STRUCTURE.
B. GEOSYNTHETIC REINFORCEMENT VERTICAL SPACING SHALL NOT EXCEED 4 FEET OR 2 UNITS.
C. GEOSYNTHETIC REINFORCEMENT SHALL BE 100% HORIZONTAL COVERAGE PARALLEL TO THE LENGTH OF THE WALL UNLESS SPECIFIED BY THE ENGINEER.
D. THE MAGNUMSTONE? WALL SYSTEM SHALL BE DESIGNED IN ACCORDANCE TO THE DESIGN MANUAL FOR MECHANICALLY STABILIZED EARTHS, IN ACCORDANCE TO AASHTO. THE MINIMUM FACTORS OF SAFETY SHALL BE (OR GREATER IF SPECIFIED BY ENGINEER)

EXTERNAL STABILITY; BASE SLIDING = 1.5, OVERTURNING = 2.0, BEARING CAPACITY = 2.0, GLOBAL STABILITY = 1.3
INTERNAL STABILITY; TENSILE OVERSTRESS = 1.0, PULLOUT = 1.5, INTERNAL SLIDING = 1.5
LOCAL STABILITY; FACING SHEAR = 1.5, CONNECTION = 1.5

3.02 SOIL STANDARDS

A. THE FOLLOWING SOIL DESIGN PARAMETERS WERE USED:
B. DRAINAGE/UNIT FILL; SOIL UNIT WEIGHT = 105LB/CUB FT, FRICTION ANGLE = 34 DEGREE, COHESION = 0 LBS/SQ FT
C. REINFORCED BACKFILL; SOIL UNIT WEIGHT = 105 LB/CUB FT , FRICTION ANGLE = 34 DEGREE, COHESION = 0LBS/SQ FT
D. RETAINED FILL; SOIL UNIT WEIGHT = 120 LB/CUB FT , FRICTION ANGLE = 24 DEGREE, COHESION = 0 LB/SQ FT

3.03 PROJECT DESIGN

A. THE SITE GRADES AND INFORMATION WILL DETERMINE THE LENGTH, HEIGHT AND OVERALL ELEVATIONS FOR THE MAGNUMSTONE? RETAINING WALL REQUIREMENTS.
B. THE DESIGN HEIGHT (H) SHALL BE MEASURED FROM THE TOP OF THE BASE LEVELING PAD TO THE TOP OF THE WALL CAP UNITS.
C. THE ABOVE AND BELOW SLOPES OF THE WALL DETAILS WILL BE ON THE SITE CONSTRUCTION DRAWINGS.
D. THE MINIMUM EMBEDMENT DEPTH OF THE WALL SHALL BE NO LESS THAN 1/2 UNIT OR H/10 OR AS SPECIFIED BY THE SITE CONSTRUCTION DRAWINGS.
E. GEOSYNTHETIC MINIMUM LENGTH SHALL NOT BE LESS THAN 70% OF THE HEIGHT OF THE WALL (H/.7).

PART 4 CONSTRUCTION

4.01 QUALIFICATIONS

CONTRACTOR AND SITE SUPERVISOR SHALL HAVE PROVEN QUALIFIED EXPERIENCE TO COMPLETE THE INSTALLATION OF THE MECHANICALLY STABILIZED EARTH SYSTEM.

4.02 EXCAVATION

A. THE CONTRACTOR SHALL EXCAVATE TO THE LINES AND GRADES SHOWN ON THE PROJECT GRADING PLANS.
B. BACK EXCAVATED CUT SHALL BE NOTCHED BENCHES OF 5 FEET VERTICAL FOR EVERY 2 FEET HORIZONTAL BENCH OR AS PER THE OWNERS GEOTECHNICAL ENGINEER.
C. OVER EXCAVATED OR FILLED AREAS SHALL BE WELL COMPACTED AND INSPECTED BY THE OWNERS GEOTECHNICAL ENGINEER.
D. EXCAVATED MATERIALS THAT ARE USED FOR BACKFILLING REINFORCEMENT ZONE SHALL BE PROTECTED FROM THE WEATHER.
E. ALL ORGANIC OR OTHER NON GRAVEL MATERIALS SHALL NOT BE USED IN THE BACKFILLED REINFORCEMENT ZONE.

4.03 FOUNDATION PREPARATION

A. FOUNDATION TRENCH SHALL BE EXCAVATED TO THE DIMENSIONS INDICATED ON THE CONSTRUCTION DRAWINGS.
B. THE REINFORCED ZONE AND LEVELING PAD FOUNDATION SOIL SHALL BE EXAMINED BY THE ON SITE ENGINEER TO ENSURE PROPER BEARING STRENGTH.
C. SOILS NOT MEETING REQUIRED STRENGTH SHALL BE REMOVED AND REPLACED WITH PROPER MATERIALS.
D. FOUNDATION MATERIALS SHALL BE COMPACTED TO A MINIMUM OF 95% STANDARD PROCTOR DRY DENSITY OR GREATER, BEFORE PLACING LEVELING PAD. (ASTM D 698)

4.04 BASE LEVELING PAD

A. A CONCRETE LEVELING PAD MINIMUM 6 INCHES THICK. THE LEVELING PAD SHALL EXTEND LATERLLY AT LEAST 6 INCHES FROM THE TOE & HEEL OF THE LOWEST SRW UNIT.
B. THE BASE LEVELING PAD SHALL BE LEVEL HORIZONTALLY AND BACK TO FRONT TO ENSURE THE FIRST COURSE OF UNITS ARE LEVEL.
C. TOP OF BASE LEVELING PAD ELEVATION AND INSTALLATION OF GRANULAR MATERIALS SHALL BE IN ACCORDANCE OF THE SPECIFICATIONS AND CONSTRUCTION DRAWINGS. THE TOE OF THE WALL BURIAL DEPTH SHALL BE CONSTRUCTED AS SHOWN ON THE CONSTRUCTION DRAWINGS.

4.05 UNITS INSTALLATION

A. THE FIRST COURSE OF MAGNUMSTONE? UNITS SHALL BE CAREFULLY PLACED ON A WELL GRADED GRAVEL OR CONCRETE LEVELING PAD.
B. THE FIRST ROW OF UNITS SHALL BE LEVEL FORM UNIT TO UNIT AND FROM BACK TO FRONT.
C. A STRING LINE CAN BE USED TO ALIGN A STRAIGHT WALL OR PVC FLEX PIPES CAN BE USED TO ESTABLISH SMOOTH CONVEX OR CONCAVE CURVED WALLS.
D. USE THE SMOOTH BACK OF THE UNITS FOR ALIGNMENT AND MEASURING TO ENSURE SMOOTH CURVES AND STRAIGHT WALLS.
E. THE SECOND COURSE OF UNITS SHALL HAVE THE CONCRETE CONNECTING LUGS IN THE UNIT VOIDS OF THE FIRST COURSE BELOW AND PULLED FORWARD RESTING THE LUGS AGAINST THE FRONT EDGE OF THE 2 LOWER UNIT VOIDS.
F. ALL UNITS SHALL BE LAID SNUGLY TOGETHER AND PARALLEL TO THE STRAIGHT OR CURVED LINES.
G. THE MAGNUMSTONE? UNITS SHALL BE SWEPT CLEAN OF ALL DIRT OR ROCKS BEFORE INSTALLING THE NEXT LAYER OF UNITS OR PLACING THE GEOSYNTHETICS.
H. AFTER LAYING EACH COURSE, PERFORM A VISUAL OR STRING LINE STRAIGHTNESS CHECK.

DRAINAGE GRAVEL
A. MAGNUMSTONE? UNIT VOIDS AND THE DRAINAGE CHIMNEY 12 INCHES BEHIND THE WALL SHALL BE FILLED WITH A FREE-DRAINING GRANULAR MATERIAL, SUCH AS CLEAR ROCK (CLEAN GRAVEL).
B. CLEAR GRAVEL (CLEAN GRAVEL) SHALL BE PLACED INTO THE UNIT VOIDS AND BEHIND THE WALL EACH COURSE BEFORE PLACING THE GEOSYNTHETIC REINFORCEMENT LAYER.
C. CLEAR GRAVEL (CLEAN GRAVEL) DOES NOT NEED ANY MECHANICAL COMPACTION.

4.06 BACKFILL

A. THE REINFORCED BACKFILL MATERIALS SHALL BE PLACED IN MAXIMUM LIFTS OF 8 INCHES AND SHALL BE COMPACTED TO A MINIMUM 95% STANDARD PROCTOR DENSITY OR GREATER, IN ACCORDANCE WITH ASTM D 698
B. ONLY HAND-OPERATED COMPACTION EQUIPMENT SHALL BE USED WITHIN 2 FEET OF THE BACK OF THE WALL.
C. SOIL DENSITY TESTING SHALL NOT BE TAKEN WITHIN THE 2 FOOT AREA.
D. THE BACKFILL SHALL BE SMOOTH AND LEVEL SO THAT THE GEOSYNTHETIC LAYS FLAT WITH NO DIPS OR BUMPS.
E. THE TOE OF THE WALL SHALL BE FILLED AND COMPACTED AS THE WALL IS BEING CONSTRUCTED.

4.07 CAP INSTALLATION

A. THE MAGNUMSTONE? FULL SIZE CAP UNITS SHOULD BE PLACED IN THE SAME INSTALLATION PROCEDURES AS THE REGULAR MAGNUMSTONE? UNITS.
B. GEOTEXTILES SHOULD BE USED AS A SOIL SEPARATOR BETWEEN THE FINAL LAYER OF BACKFILL AND DRAINAGE MATERIALS AND THE TOP SOIL MATERIALS TO PREVENT FINES FROM MIGRATING INTO THE DRAINAGE GRAVEL OR THROUGH THE WALL FACE.
C. A SPECIAL MAGNUMSTONE? HIGH CAP CAN BE USED TO COMPLETE THE TOP OF THE WALL. CONCRETE ADHESIVE SHOULD BE USED TO GLUE THE CAP UNITS TO THE REGULAR UNITS.

PART 5 CONSTRUCTION QUALITY CONTROL AND ASSURANCE

5.01 CONSTRUCTION QUALITY CONTROL

A. THE WALL PROJECT INSTALLER IS RESPONSIBLE TO ENSURE THAT ALL INSTALLATION AND MATERIALS MEET THE QUALITY SPECIFIED IN THE CONSTRUCTION DRAWINGS.
B. A QUALIFIED INDEPENDENT PARTY WILL BE RESPONSIBLE TO VERIFY THAT INSTALLATION PROCEDURES HAVE BEEN INSTALLED IN ACCORDANCE WITH THE SPECIFICATIONS AND CONSTRUCTION DRAWINGS.
C. ALL SITE CONSTRUCTION TOLERANCES FOR VERTICAL ALIGNMENT, HORIZONTAL LOCATIONS FOR ELEVATIONS, CORNER AND RADIUS LOCATIONS, WALL BATTER AND MINIMUM BULGING WILL BE WITHIN AASHTO SPECIFICATIONS.

5.02 QUALITY ASSURANCE

A. THE OWNER IS RESPONSIBLE TO ENGAGE TESTING AND INSPECTION SERVICES TO PROVIDE INDEPENDENT QUALITY CONSTRUCTION ASSURANCE.
B. COMPACTION TESTING OF THE REINFORCEMENT BACKFILL SOILS SHALL BE PERFORMED EVERY 2 VERTICAL FEET OF MATERIAL INSTALLATION.
C. THE TESTS SHALL BE DONE A MINIMUM OF EVERY 50 LINEAL FEET ALONG THE WALL AT EACH LEVEL OF TESTING.
D. TESTING SHALL NOT BE CLOSER THAN 3 FEET FROM THE BACK OF THE WALL AND DONE AT A VARIETY OF LOCATIONS TO COVER THE ENTIRE REINFORCED SOIL ZONE.
E. INDEPENDENT INSPECTION PROFESSIONALS SHALL ENSURE ALL PARAMETERS AND CONSTRUCTION SPECIFICATIONS HAVE BEEN FOLLOWED IN ACCORDANCE TO THE DESIGN DRAWINGS AND SPECIFICATIONS.

PART 6 PAYMENT

6.01 PAYMENT FOR THE INSTALLATION OF THE MAGNUMSTONE? WALL SHALL BE BASED ON THE LUMP SUM BID, PER THE WALL PROFILE SHOWN ON THE PLANS. THE SHIPPING AND DELIVERY SLIPS SHALL BE VERIFIED BY BOTH CONTRACTOR AND OWNER OR OWNER REPRESENTATIVE AT THE TIME OF PRODUCT DELIVERY TO THE SITE AND THIS WILL BE THE BASES OF THE FINAL COUNT OR PRODUCT USED.

GEOSYNTHETIC SOIL REINFORCEMENT

PART 1 GENERAL

1.01 DESCRIPTION
THE WORK CONSISTS OF SUPPLYING AND INSTALLING GEOSYNTHETIC REINFORCEMENTS AND THE REINFORCEMENT BACKFILL ZONE AS SPECIFIED IN THE CONSTRUCTION DRAWINGS OR AS ESTABLISHED BY THE OWNER, ARCHITECT OR ENGINEER.

1.02 RELATED WORK
A. SECTION 02832 MECHANICALLY STABILIZED EARTH RETAINING WALL
B. SECTION 02200 SITE PREPARATION
D. SECTION 02300 EARTHWORK
E. SECTION 02070 GEOSYNTHETIC REINFORCEMENT WALLS

1.03 REFERENCE STANDARD GEOSYNTHETIC REINFORCEMENT
A. ASTM D 4595 TENSILE PROPERTIES OF GEOSYNTHETICS
B. ASTM D 5262 EVALUATING THE UNCONFINED CREEP OF THE GEOSYNTHETICS
C. GGI GG -1 SINGLE RIB GEOSYNTHETIC TENSILE STRENGTH
D. GGI GG -5 GEOGRID PULLOUT
E. GGI GG -6 GEOTEXTILE PULLOUT

1.04 REFERENCE STANDARDS FOR SOILS
A. ASTM D 698 MOISTURE DENSITY RELATIONSHIP FOR SOILS
B. ASTM D 422 GRADATION OF SOILS
C. ASTM D 424 ATTERBERG LIMITS OF SOILS
D. ASTM D G51 SOIL PH

1.05 DELIVERY, STORAGE AND HANDLING

A. THE CONTRACTOR SHALL INSPECT ALL GEOSYNTHETIC PRODUCTS DELIVERED TO THE SITE TO ENSURE FOR THE PROPER TYPE AND STRENGTH.
B. GEOSYNTHETICS SHALL BE STORED IN ACCORDANCE WITH THE MANUFACTURES SPECIFICATIONS.
C. GEOSYNTHETICS SHALL BE PROTECTED FROM THE WEATHER AND ANY OTHER CONDITIONS THAT COULD DAMAGE THE MATERIAL.

PART 2 MATERIALS

2.01 GEOSYNTHETIC PRODUCTS

A. GEOGRID PRODUCTS SPECIFICALLY PRODUCED FOR THE USE OF SOIL REINFORCEMENT AND CONSISTING OF HIGH-DENSITY POLYETHYLENE OR POLYPROPYLENE.
B. GEOTEXTILES ARE WOVEN FABRICS PRODUCED FOR THE USE OF SOIL REINFORCEMENT.
C. THE MANUFACTURED SPECIFICATIONS SHALL BE USED FOR TEST DATA AND INSTALLATION PROCEDURES.
D. APPROVED GEOSYNTHETICS AS PER DRAWINGS, STRATAGRID SG 350, SG 500 & SG700.
E. ALL PRODUCTS SHALL BE APPROVED BY THE SITE ENGINEER.

PART 3 CONSTRUCTION

3.01 QUALIFICATION
REFER TO SECTION 02832 MECHANICALLY STABILIZED EARTH WALL
3.02 EXCAVATION
REFER TO SECTION 02832 MECHANICALLY STABILIZED EARTH WALL
3.03 FOUNDATION PREPARATION
REFER TO SECTION 02832 MECHANICALLY STABILIZED EARTH WALL
3.04 LEVELING PAD
REFER TO SECTION 02832 MECHANICALLY STABILIZED EARTH WALL
3.05 UNIT INSTALLATION
REFER TO SECTION 02832 MECHANICALLY STABILIZED EARTH WALL

3.06 INSTALLATION OF GEOSYNTHETICS REINFORCEMENT

A. THE CONSTRUCTION PLANS SHALL SHOW THE TYPE, STRENGTH AND LOCATION OF THE GEOSYNTHETICS.
B. MANUFACTURER'S SPECIFICATIONS SHALL BE USED FOR TEST DATA AND INSTALLATION PROCEDURES.
C. THE GEOSYNTHETICS SHALL BE CUT TO THE CORRECT LENGTH AND LAID IN THE ORIENTATION AS SPECIFIED BY THE MANUFACTURER.
D. THE MAGNUMSTONE? UNIT VOIDS, DRAINAGE CHIMNEY AND BACKFILL ZONE ARE FILLED, COMPACTED AND LEVELED CORRECTLY BEFORE PLACING THE GEOSYNTHETICS.
E. ENSURE THAT THE DRAINAGE MATERIALS DIRECTLY BEHIND THE WALL UNITS ARE FLUSH OR SLIGHTLY HIGHER THAN THE TOP OF THE UNITS SO THAT THE GEOSYNTHETICS WILL NOT BE SHEARED ON THE BACK OF THE SHARP EDGE.
F. THE UNITS SHALL BE SWEPT CLEAN OF ALL DIRT OR ROCKS BEFORE PLACING THE GEOSYNTHETICS.
G. SHIMMING OF UNITS SHALL NOT BE ALLOWED ON THE GEOSYNTHETIC LAYERS.
H. THE GEOSYNTHETICS SHALL BE PLACED AS FAR FORWARD ON THE MAGNUMSTONE? UNITS AS POSSIBLE WITHOUT REVEALING MATERIALS ON THE FACE OF THE WALL.
I. LOOSELY LAY GEOSYNTHETICS TOWARD THE BACK OF THE COMPACTED BACKFILL ZONE.
J. GENTLY PULL THE GEOSYNTHETICS TOWARD THE BACK OF THE COMPACTED BACKFILL ZONE AFTER PLACING THE NEXT ROW OF MAGNUMSTONE? UNITS ON TOP OF THE GEOSYNTHETICS AND ON TOP OF THE LOWER UNITS.
K. USE STAKES OR GRAVEL MATERIALS TO MAINTAIN TENSION ON THE GEOSYNTHETICS. EXCESSIVE TENSION MAY ALTER THE ALIGNMENT OF THE WALL UNITS.

3.07 BACKFILL

A. CONTRACTOR SHALL NOT DRIVE EQUIPMENT DIRECTLY ON THE EXPOSED GEOSYNTHETICS.
B. BACKFILL THE REINFORCED ZONE BY PLACING MATERIALS FROM THE BACK OF THE WALL TOWARDS THE END OF THE GEOSYNTHETICS IN ORDER TO MAINTAIN TENSION ON THE REINFORCEMENT.
C. CONTRACTOR SHALL LEAVE A TRENCH BETWEEN THE BACK OF THE WALL AND BACKFILL MATERIALS TO ALLOW FOR DRAINAGE CLEAN GRAVEL DRAINAGE MATERIALS. THIS PROCESS WILL PREVENT UNDUE SOIL PRESSURES THAT COULD ROTATE THE MAGNUMSTONE? UNITS FORWARD AND REDUCE THE SET BACK OF THE WALL WHILE COMPACTING THE BACKFILL MATERIALS.
D. ONCE THE MAGNUMSTONE? UNITS, GEOSYNTHETICS AND BACKFILL MATERIALS HAVE BEEN PLACED, FILL THE UNIT VOIDS AND THE DRAINAGE CHIMNEY WITH CLEAR ROCK.
E. CONTINUE THE CONSTRUCTION OF THE WALL BASED ON THE PREVIOUSLY OUTLINED STEPS PLACING AND COMPACTING SOILS AS SPECIFIED.
F. WHEN COMPLETING THE FINAL LAYER OF BACKFILL MATERIALS AND DRAINAGE GRAVEL, AND BEFORE PLACING THE PLANTING SOIL, PLACE A LAYER OF GEOSYNTHETIC SOIL SEPARATION FABRIC. THE FABRIC SHALL BE PLACED NO LESS THAN 4 FEET BEHIND THE WALL AND UP THE BACK SIDE OF THE WALL UP TO THE CAP UNIT. THE FABRIC WILL PREVENT THE PLANTING SOIL FINES FROM MIGRATING INTO THE DRAINAGE GRAVEL AND FROM STAINING THE WALL FACE.

3.08 CAP INSTALLATION
REFER TO SECTION 02832 MECHANICALLY STABILIZED EARTH WALL

PART 4 PAYMENT

4.01 PAYMENT FOR THE PLACEMENT OF THE GEOSYNTHETICS SHALL BE CONSIDERED COMPLETELY SUBSIDIARY TO THE BID PRICE FOR MAGNUM STONE WALL.

PART 5 GRAVITY WALL

5.01 THIS WALL HAS BEEN DESIGNED AS A GRAVITY WALL, SOME NOTES MAY NOT APPLY.

REV.	DATE	REVISIONS	BY	APP'D
5				
4				
3				
2				
1				

Designed By: PRP
Drawn By: JCK/JAA
Checked By: HDL
Issue Date: SEPT. 2016

COPYRIGHT © -2016-SHAFER, KLINE & WARREN INC.

SHAFER, KLINE & WARREN
11250 Corporate Avenue
Lenexa, KS 66219-1392
913.888.7800 FAX: 913.888.7868
SURVEYING | ENGINEERING | CONSTRUCTION

CLEAR CREEK PARKWAY
CITY OF SHAWNEE, KANSAS

ROSSETTA STONE RETAINING WALL
GENERAL NOTES

150561-010

SHEET NO.
0 OF 182

LAYOUT: MODEL | BY: jadams | DATE: 20-SEP-2016 10:27:43 AM
L:\150561-010_Cad\Structural\150561-010 Rossetta StoneNOTES.dgn

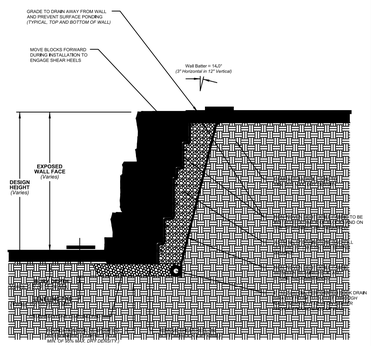

- Block sizes and placement shown are for reference only. Individual Rosetta blocks will vary with installation pattern.
- This drawing is for reference only.
- Final designs for construction must be prepared by a registered Professional Engineer using the actual Rosetta block dimensions.
- Final wall design must address both internal and external drainage and shall be evaluated by the Professional Engineer who is responsible for the wall design.

TYPICAL SECTION
(NO SCALE)

DRAWN BY: J. Johnson	TITLE: TYPICAL NON-REINFORCED (GRAVITY) WALL SECTION
APPROVED BY:	
DATE: June 5, 2008	
SHEET NO.: 1 of 1	DRAWING FILE: Gravity Wall - Typical Section.dwg

ROSETTA HARDSCAPES, LLC
05481 US 31 SOUTH CHARLEVOIX, MI 49720
877-777-6658 • 231-237-9656 Fax • www.discoverrosetta.com

SIDE VIEWS OF DIFFERENT HEIGHT BLOCKS

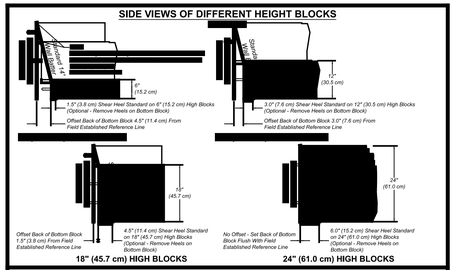

18" (45.7 cm) HIGH BLOCKS **24" (61.0 cm) HIGH BLOCKS**

TOP VIEWS OF DIFFERENT HEIGHT BLOCKS

(NO SCALE)

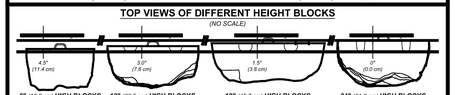

6" (15.2 cm) **HIGH BLOCKS** Offset Back of Block 4.5" (11.4 cm) From Sting Line
12" (30.5 cm) **HIGH BLOCKS** Offset Back of Block 3.0" (7.6 cm) From String Line
18" (45.7 cm) **HIGH BLOCKS** Offset Back of Block 1.5" (3.8 cm) From String Line
24" (61.0 cm) **HIGH BLOCKS** Set Back of Block Flush With String Line

(Note that when the bottom blocks are properly offset, the front of the shear heels are all lined up as if there were another course of blocks beneath the starting course.)

PROSPECTIVE VIEW OF BACK OF WALL

(NO SCALE)

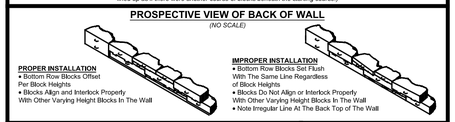

PROPER INSTALLATION
- Bottom Row Blocks Offset Per Block Heights
- Blocks Align and Interlock Properly With Other Varying Height Blocks In The Wall

IMPROPER INSTALLATION
- Bottom Row Blocks Set Flush With The Same Line Regardless of Block Heights
- Blocks Do Not Align or Interlock Properly With Other Varying Height Blocks In The Wall
- Note Irregular Line At The Back Top of The Wall

DRAWN BY: J. Johnson	TITLE: PROPER BOTTOM ROW INSTALLATION FOR ROSETTA HARDSCAPES BLOCKS
APPROVED BY:	
DATE: February 29, 2008	DRAWING FILE: Bottom Row Block Installation.dwg

ROSETTA HARDSCAPES, LLC
05481 US 31 SOUTH CHARLEVOIX, MI 49720
877-777-6658 • 231-237-9656 Fax • www.discoverrosetta.com

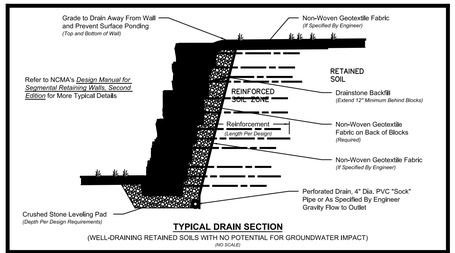

TYPICAL DRAIN SECTION
(WELL-DRAINING RETAINED SOILS WITH NO POTENTIAL FOR GROUNDWATER IMPACT)
(NO SCALE)

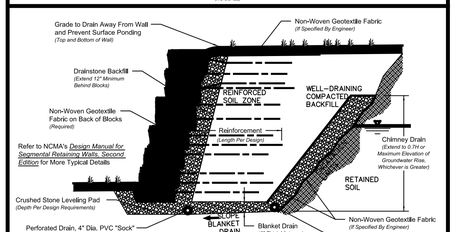

TYPICAL DRAIN SECTION
(POOR-DRAINING RETAINED SOILS AND/OR AREAS WITH POTENTIAL GROUNDWATER IMPACT)
(NO SCALE)

DRAWN BY: J. Johnson	TITLE: TYPICAL DRAIN DETAILS
APPROVED BY:	
DATE: January 28, 2008	DRAWING FILE: Drain Options - Typical Reinf Wall Details.dwg

ROSETTA HARDSCAPES, LLC
05481 US 31 SOUTH CHARLEVOIX, MI 49720
877-777-6658 • 231-237-9656 Fax • www.discoverrosetta.com

TYPICAL FENCE OR RAILING CONNECTIONS TO ROSETTA OUTCROPPING BLOCKS

CONNECTION OPTION #1
Core through Outcropping Blocks at Desired Post Locations and Grout Posts in Place

Posts Can Be Installed as Deep as Needed to Provide Sufficient Weight to Resist Overturning Forces on Railing

CONNECTION OPTION #2
Connect Mounting Flange to Top Block with Expansion Anchor Bolts

Weight of Top Block is Available to Resist Overturning Forces on Railing

Top View
(NO SCALE)

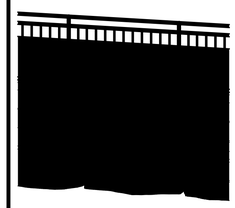

Front View
(NO SCALE)

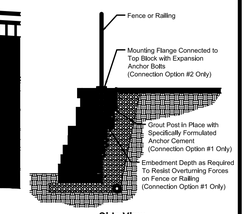

Side View
(NO SCALE)

DRAWN BY: J. Johnson	TITLE: TYPICAL FENCE OR RAILING CONNECTIONS TO ROSETTA OUTCROPPING WALLS
APPROVED BY:	
DATE: November 9, 2011	
SHEET NO.: 1 of 1	DRAWING FILE: Railing - Typical Installation 110911.dwg

ROSETTA HARDSCAPES, LLC
05481 US 31 SOUTH CHARLEVOIX, MI 49720
877-777-6658 • 231-237-9656 Fax • www.discoverrosetta.com

TYPICAL CONNECTION OF 6" OR 12" (15.2 cm or 30.5 cm) HIGH ROSETTA BLOCKS AND PARAWEB STRAP

(NO SCALE)

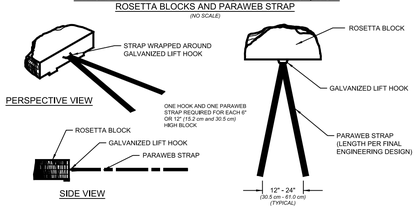

STRAP TO BE PLACED AROUND HOOK AND SECURED IN PLACE. BACKFILL TO BE PLACED AND COMPACTED FROM THE ROSETTA BLOCK BACK INTO THE REINFORCED SOIL ZONE TO AVOID "BUNCHING" OF THE STRAP.

TYPICAL CONNECTION OF 18" OR 24" (45.7 cm or 61.0 cm) HIGH ROSETTA BLOCKS AND PARAWEB STRAP

(NO SCALE)

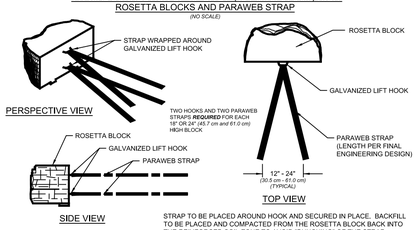

STRAP TO BE PLACED AROUND HOOK AND SECURED IN PLACE. BACKFILL TO BE PLACED AND COMPACTED FROM THE ROSETTA BLOCK BACK INTO THE REINFORCED SOIL ZONE TO AVOID "BUNCHING" OF THE STRAP.

DRAWN BY: J. Johnson	TITLE: TYPICAL PARAWEB STRAP CONNECTION TO A ROSETTA HARDSCAPES BLOCK
APPROVED BY:	
DATE: February 28, 2008	DRAWING FILE: Strap Connection - Typical Detail.dwg

ROSETTA HARDSCAPES, LLC
05481 US 31 SOUTH CHARLEVOIX, MI 49720
877-777-6658 • 231-237-9656 Fax • www.discoverrosetta.com

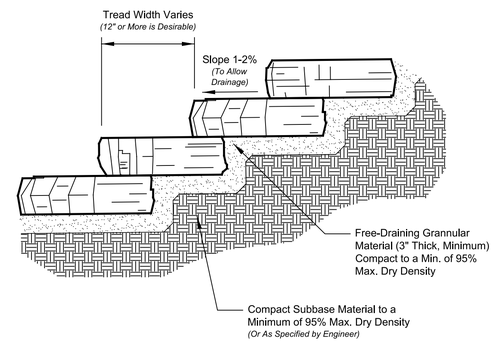

TYPICAL STEP INSTALLATION
(NO SCALE)

DRAWN BY: J. Johnson	TITLE: TYPICAL ROSETTA HARDSCAPES STEP INSTALLATION
APPROVED BY:	
DATE: January 25, 2008	DRAWING FILE: Step Installation - Typical Section.dwg

ROSETTA HARDSCAPES, LLC
05481 US 31 SOUTH CHARLEVOIX, MI 49720
877-777-6658 • 231-237-9656 Fax • www.discoverrosetta.com

REV.	DATE	REVISIONS	BY	APP'D
5				
4				
3				
2				
1				

Designed By: PRP
Drawn By: JCK/JAA
Checked By: HDL
Issue Date: SEPT. 2016

COPYRIGHT © -2016-SHAFER, KLINE & WARREN INC.

SHAFER, KLINE & WARREN
11250 Corporate Avenue
Lenexa, KS 66219-1392
913.888.7800 FAX: 913.888.7868
SURVEYING | ENGINEERING | CONSTRUCTION

CLEAR CREEK PARKWAY
CITY OF SHAWNEE, KANSAS

ROSSETTA STONE RETAINING WALL
GENERAL NOTES

150561-010

SHEET NO.
0 OF 182

LAYOUT: MODEL | BY: jadams | DATE: 20-SEP-2016 10:27:49 AM
L:\150561-010_Cad\Structural\150561-010 Rossetta Stone DETAILS.dgn

NOT FOR CONSTRUCTION

Fixture Schedule

Symbol	Label	Quantity	Manufacturer	Catalog Number	Description	Lumens Per Lamp	Light Loss Factor	Wattage
	A	31	EATON - McGRAW-EDISON (FORMER COOPER LIGHTING)	GLEON-AE-04-LED-E1-T4W-700*	GALLEON LED AREA AND ROADWAY LUMINAIRE (4) 70 CRI, 4000K, 700mA LIGHTSQUARES WITH 16 LEDS EACH AND TYPE IV WIDE OPTICS	235	0.91	138
	B	3	EATON - McGRAW-EDISON (FORMER COOPER LIGHTING)	GLEON-AE-05-LED-E1-RW-700*	GALLEON LED AREA AND ROADWAY LUMINAIRE (5) 70 CRI, 4000K, 700mA LIGHTSQUARES WITH 16 LEDS EACH AND RECTANGULAR WIDE OPTICS	240	0.91	176
		34	EATON	SSA6X30WX1*	SQUARE STRAIGHT ALUMINUM			

* SEE NOTE 2

SCHEDULE NOTES:
1. LIGHTING DESIGN IS BASED ON FOLLOWING CRITERIA: MINIMUM AVERAGE ILLUMINANCE OF .6 FOOTCANDLES, UNIFORMITITY RATIO OF 6:1, LIGHT LOSS FACTOR OF .91. MOUNTING HEIGHT OF FIXTURE SHALL BE 30.'

2. NEW LIGHT FIXTURES AND POLES SHALL MATCH THE FINISH/COLOR OF THE EXISTING BRIDGE LIGHTING ON CLEAR CREEK PARKWAY NEAR HEDGE LANE TERRACE (ABOVE K7 HIGHWAY).

STATISTICS

Description	Symbol	Avg	Max	Min	Max/Min	Avg/Min
ROUNDABOUT	+	1.2 fc	2.1 fc	0.6 fc	3.5:1	2.0:1
CLEAR CREEK PKWY	+	0.85 fc	1.7 fc	0.3 fc	5.9:1	3.2:1

GENERAL NOTES
1. THE SHAWNEE DESIGN AND CONSTRUCTION MANUAL SHALL GOVERN THE CONSTRUCTION OF ALL PUBLIC IMPROVEMENTS FOR THIS PROJECT.
2. THE CITY OF SHAWNEE'S PLAN REVIEW IS ONLY FOR GENERAL CONFORMANCE WITH THE SHAWNEE MUNICIPAL CODE AND THE DESIGN AND CONSTRUCTION MANUAL. THE APPROVAL OF THESE IMPROVEMENT PLANS SHALL NOT BE CONSTRUED TO BE AN APPROVAL OF ANY VIOLATION OF THE CITY OF SHAWNEE'S MUNICIPAL CODE, INCLUDING BUILDING AND ZONING CODES, AND ANY OTHER CITY ORDINANCE. THE CITY OF SHAWNEE IS NOT RESPONSIBLE FOR THE ACCURACY AND ADEQUACY OF THE DESIGN, OR DIMENSIONS AND ELEVATIONS, WHICH SHALL BE CONFIRMED AND CORRELATED AT THE PROJECT SITE. THE CITY OF SHAWNEE THROUGH ITS APPROVAL OF THESE IMPROVEMENT PLANS ASSUMES NO RESPONSIBILITY OTHER THAN AS STATED ABOVE FOR ACCURACY AND COMPLETENESS.
3. THESE IMPROVEMENT PLANS ARE APPROVED INITIALLY FOR ONE (1) YEAR AFTER WHICH THEY ARE AUTOMATICALLY VOID AND MUST BE UPDATED AND RE-APPROVED BY THE CITY ENGINEER BEFORE ANY CONSTRUCTION WILL BE PERMITTED.
4. THE CONTRACTOR SHALL HAVE ONE (1) SIGNED COPY OF THE IMPROVEMENT PLANS, APPROVED BY THE CITY OF SHAWNEE, AT THE PROJECT SITE AT ALL TIMES.
5. THE CONSTRUCTION OF THE IMPROVEMENTS SHOWN OR IMPLIED BY THESE PLANS SHALL NOT BE INITIATED, OR ANY PART THEREOF UNDERTAKEN, UNTIL THE CITY ENGINEER IS NOTIFIED OF SUCH INTENT, AND ALL REQUIRED PERMITS AND FEES, PROPERLY EXECUTED BONDS, AND CONTRACT AGREEMENTS ARE RECEIVED AND APPROVED BY THE CITY ENGINEER.
6. THE CONTRACTOR SHALL CONTACT THE ENGINEERING INSPECTOR AT LEAST FORTY-EIGHT (48) HOURS IN ADVANCE TO SCHEDULE A REQUIRED INSPECTION.
7. THE CONTRACTOR SHALL NOT WORK ON SUNDAYS OR HOLIDAYS. WORK ON SATURDAYS IS ALLOWED WHEN REQUESTED AT LEAST FORTY-EIGHT (48) HOURS IN ADVANCE AND WHEN APPROVED BY THE CITY ENGINEER.
8. ALL WORK SHALL BE CONFINED WITHIN THE RIGHT-OF-WAY OR DEFINED CONSTRUCTION LIMITS. WORK OUTSIDE OF THESE BOUNDARIES SHALL REQUIRE APPROVAL BY THE CITY ENGINEER.
9. THE CONTRACTOR SHALL STAKE THE LOCATIONS FOR ALL POLES, CONDUITS, CONTROL CENTERS, SERVICE BOXES, AND JUNCTION BOXES TO BE INSTALLED. THE STATIONS AND OFFSETS PROVIDED ARE TO THE CENTER OF THE STREET LIGHTING EQUIPMENT. THE CONTRACTOR SHALL PROVIDE ELEVATIONS. IF OBSTRUCTIONS ARE ENCOUNTERED DURING INSTALLATION, THE CONTRACTOR WILL RE-STAKE THOSE LOCATIONS AFFECTED BY THE OBSTRUCTION. THE CONTRACTOR SHALL CONTACT THE ENGINEERING INSPECTOR TO INSPECT THE STAKING PRIOR TO COMMENCING ANY EXCAVATION OR CONSTRUCTION WORK.
10. THE PLACEMENT OF CONDUIT SHALL BE COORDINATED WITH ALL PAVING OPERATIONS WITHIN THE PROJECT LIMITS. CONDUIT INSTALLATION AND CONDUIT CONNECTIONS SHALL BE INSPECTED AND APPROVED BY THE ENGINEERING INSPECTOR. THE CONTRACTOR SHALL BE RESPONSIBLE FOR ALL EXTRA COSTS OF INSTALLING CONDUITS BY ALTERNATE CONSTRUCTION METHODS AFTER THE STREET PAVEMENT HAS BEEN PLACED AND FOR ANY DAMAGE TO THE PAVEMENT THAT MAY OCCUR DURING CONDUIT INSTALLATION.
11. THE CONTRACTOR IS RESPONSIBLE FOR REMOVING EXISTING EQUIPMENT AS NOTED AND DELIVERING ALL SALVAGEABLE EQUIPMENT TO THE SHAWNEE PUBLIC WORKS SERVICE CENTER. THE CONTRACTOR SHALL CONTACT THE CITY ENGINEER AT LEAST TWENTY-FOUR (24) HOURS IN ADVANCE TO COORDINATE THE DELIVERY. ALL EQUIPMENT SHALL BE DISASSEMBLED PER THE INSTRUCTIONS OF THE CITY ENGINEER. THE CONTRACTOR SHALL BE RESPONSIBLE FOR ANY DAMAGE OR LOSS OF SALVAGEABLE EQUIPMENT.
12. ALL EXISTING UTILITIES SHOWN ON THESE IMPROVEMENT PLANS ARE ACCORDING TO THE BEST INFORMATION AVAILABLE TO THE DESIGN ENGINEER, HOWEVER, ALL UTILITIES ACTUALLY EXISTING MAY NOT BE SHOWN. UTILITIES DAMAGED THROUGH THE NEGLIGENCE OF THE CONTRACTOR TO OBTAIN THE LOCATION OF SAME SHALL BE REPAIRED OR REPLACED AT THE EXPENSE OF THE CONTRACTOR.
13. THE CONTRACTOR SHALL TAKE ALL PRECAUTIONS NECESSARY TO MINIMIZE THE DOWNTIME OF AN EXISTING STREET LIGHTING SYSTEM TO BE MODIFIED. ALL EXISTING EQUIPMENT DAMAGED THROUGH THE NEGLIGENCE OF THE CONTRACTOR DURING CONSTRUCTION SHALL BE REPAIRED OR REPLACED, AS DIRECTED BY THE CITY ENGINEER AT THE EXPENSE OF THE CONTRACTOR.
14. ALL EXISTING DRIVEWAYS, PARKING LOTS, SIDEWALKS, FENCES AND UNDERGROUND SPRINKLER SYSTEMS DAMAGED THROUGH THE NEGLIGENCE OF THE CONTRACTOR DURING CONSTRUCTION SHALL BE RESTORED TO THEIR ORIGINAL OPERATING CONDITION AT THE EXPENSE OF THE CONTRACTOR. ALL AFFECTED SURFACES, FENCES, PIPES AND FITTINGS SHALL BE REPLACED WITH NEW MATERIALS AT THE ORIGINAL LOCATION. ALL RESTORATION WORK SHALL BE ACCEPTABLE TO THE CITY ENGINEER AND THE PROPERTY OWNER.
15. CONTRACTOR SHALL BE RESPONSIBLE FOR ALL COST AND COORDINATION WITH ELECTRICAL COMPANY TO SUPPLY POWER HOOK-UP TO CONTROLLER. THIS SHALL INCLUDE ANY CONDUIT, WIRING, METER, AND OTHER REQUIREMENTS BY THE ELECTRICAL UTILITY COMPANY.
16. MINOR RELOCATION OF STREET LIGHT POLES, JUNCTION BOXES, AND CONTROLLES TO AVOID CONFLICTS WITH EXISTING UTILITIES AND FEATURES MAY BE ALLOWED UPON APPROVAL OF THE ENGINEER.
17. THE CONTRACTOR SHALL OBTAIN A STREET LIGHT IMPROVEMENT PERMIT AT THE SHAWNEE CITY HALL, AND CONTACT THE PUBLIC WORKS DEPARTMENT AT 913-742-6008 PRIOR TO BEGINNING ANY CONSTRUCTION.

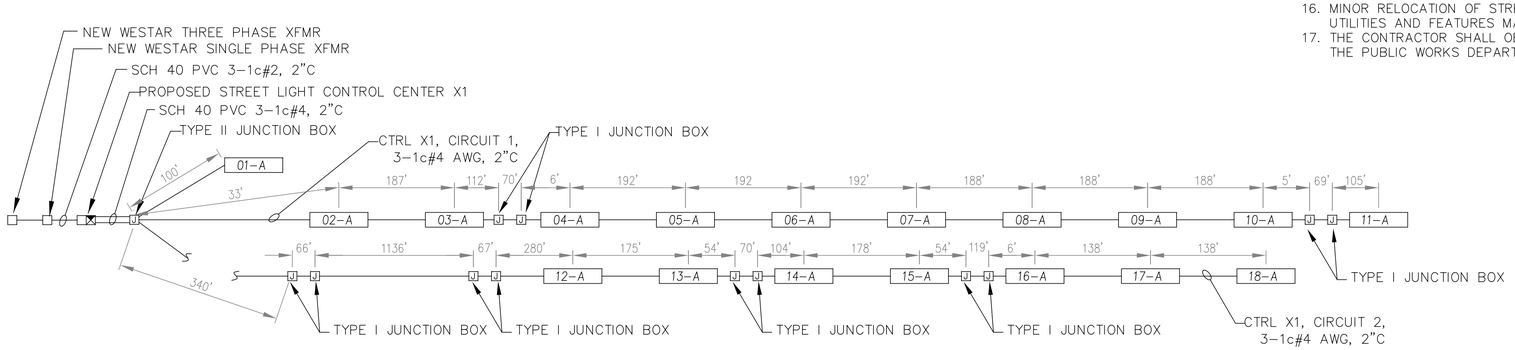

CLEAR CREEK ONELINE DIAGRAM (CONTROLLER X1)

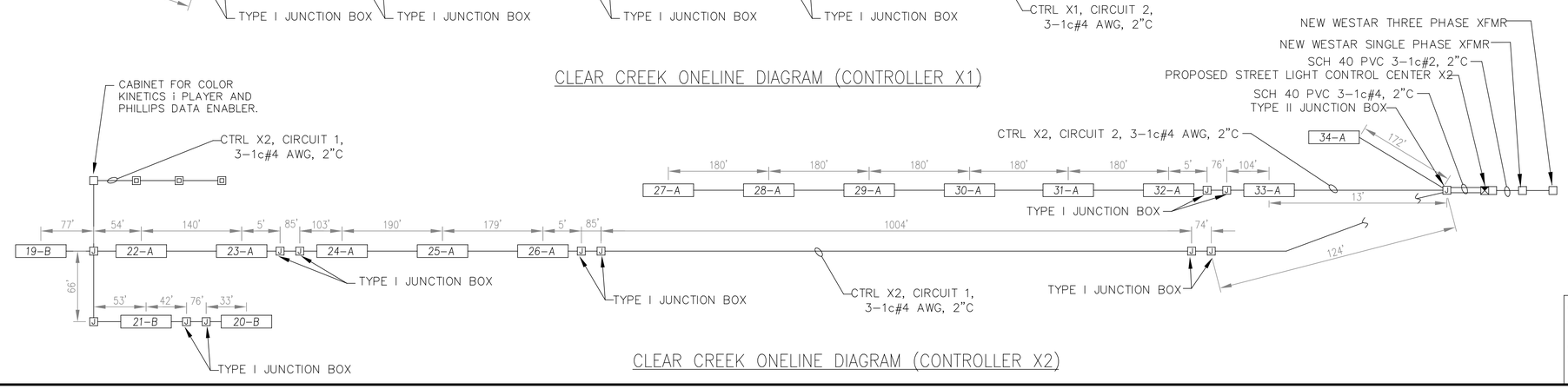

CLEAR CREEK ONELINE DIAGRAM (CONTROLLER X2)

LEGEND

- 2" PVC CONDUIT (SCH. 40) WITH DISTRIBUTION CABLE(3-1c#4 AWG)
- 2" PVC CONDUIT (SCH. 80) WITH DISTRIBUTION CABLE(3-1c#4 AWG)
- PROPOSED LED LUMINAIRE W/30' POLE
- JUNCTION BOX
- STREET LIGHTING CONTROL CENTER

CONSTRUCTION NOTES:
1. JUNCTION BOXES AND EQUIPMENT NEAR FUTURE ENTRANCES SHALL NOT CONFLICT WITH FUTURE IMPROVEMENTS. CONTRACTOR SHALL INSTALL JUNCTION BOXES TO AVOID CONFLICTS WITH EXISTING SIDEWALKS AND CURB AND GUTTER.

NEW CONTROLLER ID: X1
ADDRESS: XXXXXXXX STREET

NEW CONTROLLER ID: X2
ADDRESS: XXXXXXXX STREET

REV.	DATE	REVISIONS	BY	APP'D
1				
2				
3				
4				
5				

Designed By: PRP
Drawn By: JCK/JAA
Checked By: HDL
Issue Date: SEPT. 2016

COPYRIGHT © -2016-SHAFER, KLINE & WARREN INC.

SHAFER, KLINE & WARREN
11250 Corporate Avenue
Lenexa, KS 66219-1392
913.888.7800 FAX: 913.888.7868
SURVEYING | ENGINEERING | CONSTRUCTION

CLEAR CREEK PARKWAY
CITY OF SHAWNEE, KANSAS

STREET LIGHTING
GENERAL NOTES, ONELINE AND SCHEDULES

150561-010

LAYOUT: MODEL | BY: jadams | DATE: 20-SEP-2016 10:27:55 AM
L:\150561-010_Cad\Civil\Street Lighting\150561-010_STLT-GN-01.dgn

NOT FOR CONSTRUCTION

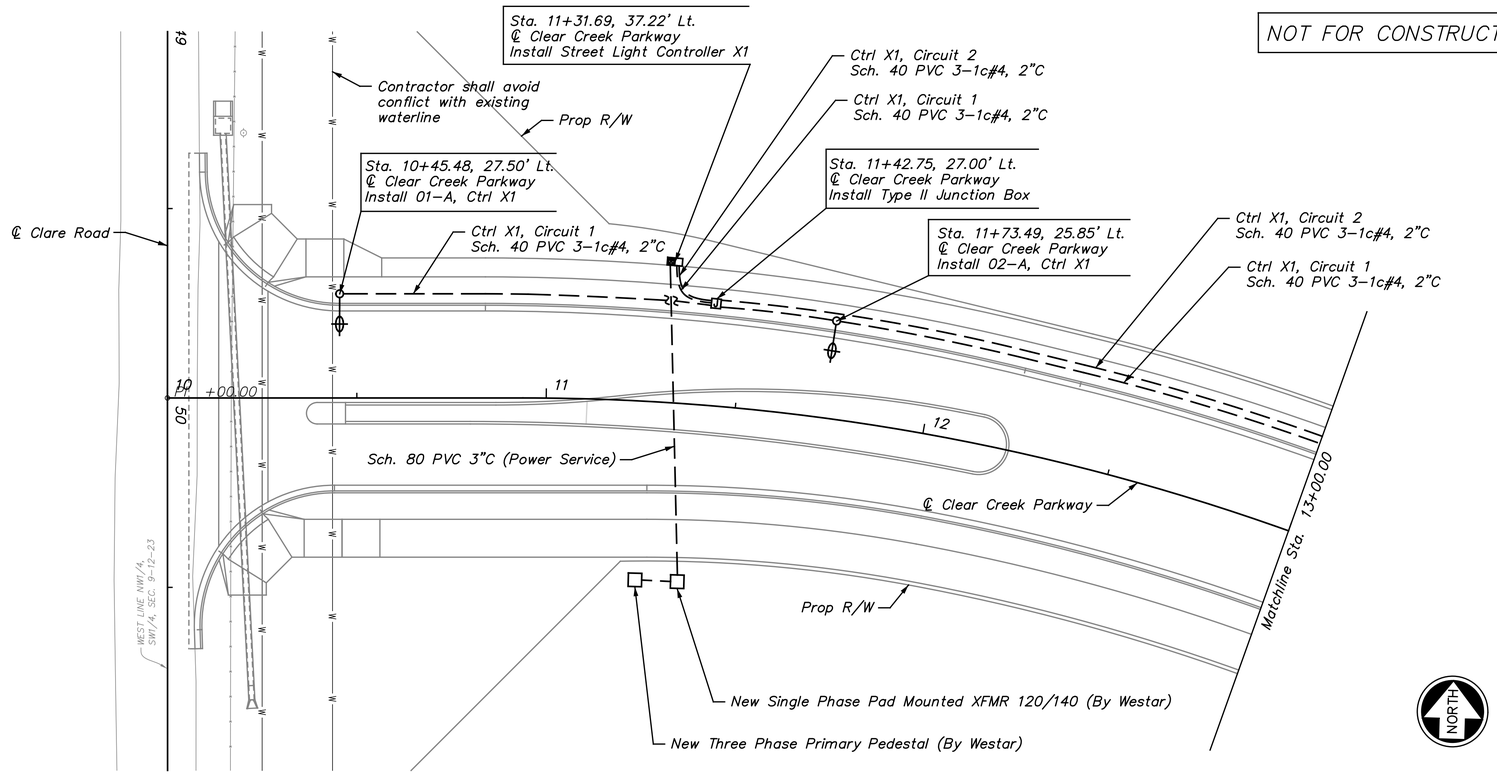

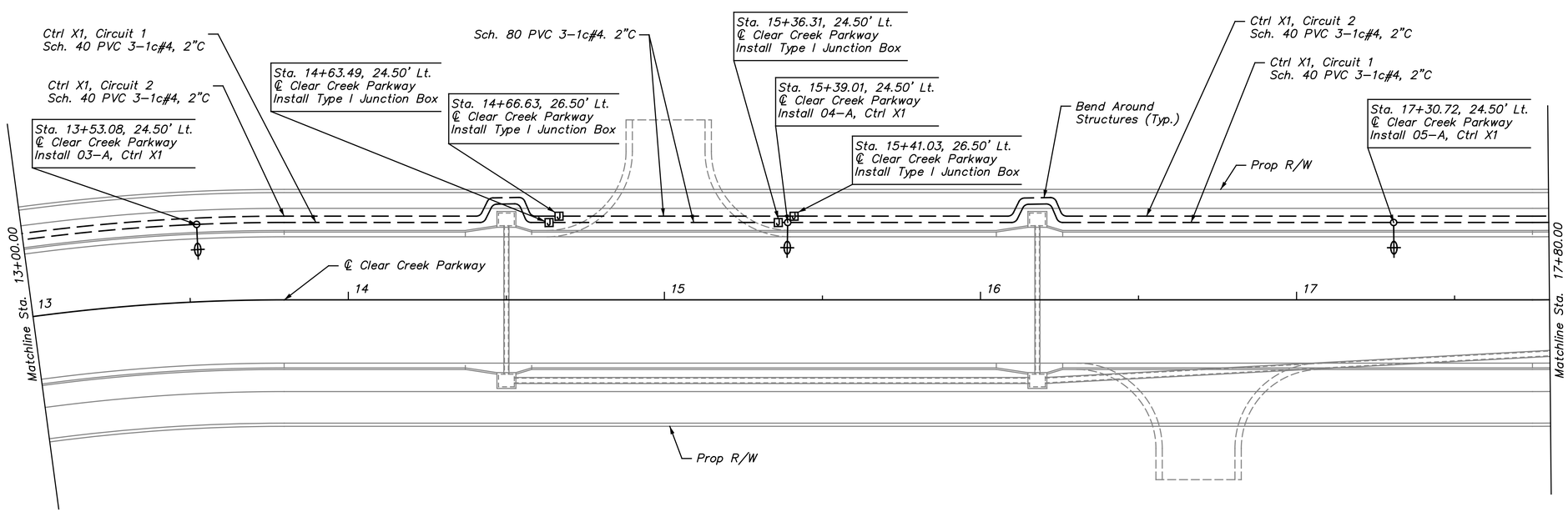

New Controller ID: X1
Address: XXXXX Street

REV.	DATE	REVISIONS	BY	APP'D
1				
2				
3				
4				
5				

Designed By: PRP
Drawn By: JCK/JAA
Checked By: HDL
Issue Date: SEPT. 2016

COPYRIGHT © -2016-SHAFER, KLINE & WARREN INC.

SHAFER, KLINE & WARREN
11250 Corporate Avenue
Lenexa, KS 66219-1392
913.888.7800 FAX: 913.888.7868
SURVEYING | ENGINEERING | CONSTRUCTION

CLEAR CREEK PARKWAY
CITY OF SHAWNEE, KANSAS

STREET LIGHTING PLAN (1)
STA. 10+00.00 TO STA. 17+80.00

150561-010

SHEET NO.
87 OF 182

LAYOUT: MODEL | BY: jadams | DATE: 20-SEP-2016 10:28:10 AM
L:\150561-010_Cad\Civil\Street Lighting\150561-010_STLT-01.dgn

NOT FOR CONSTRUCTION

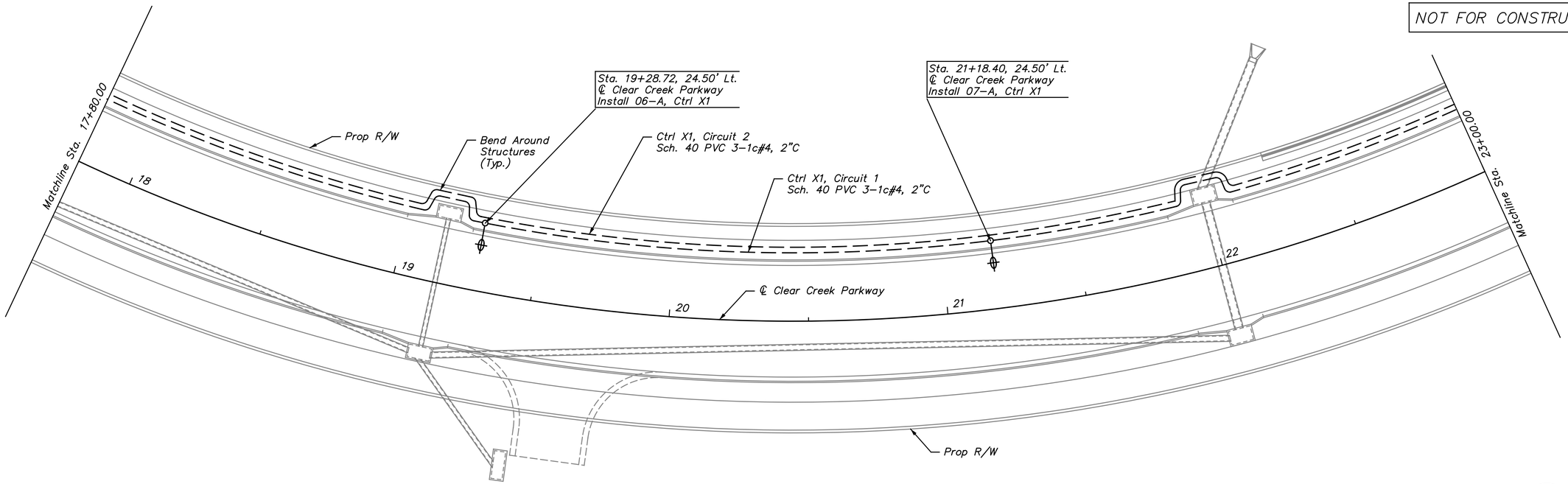

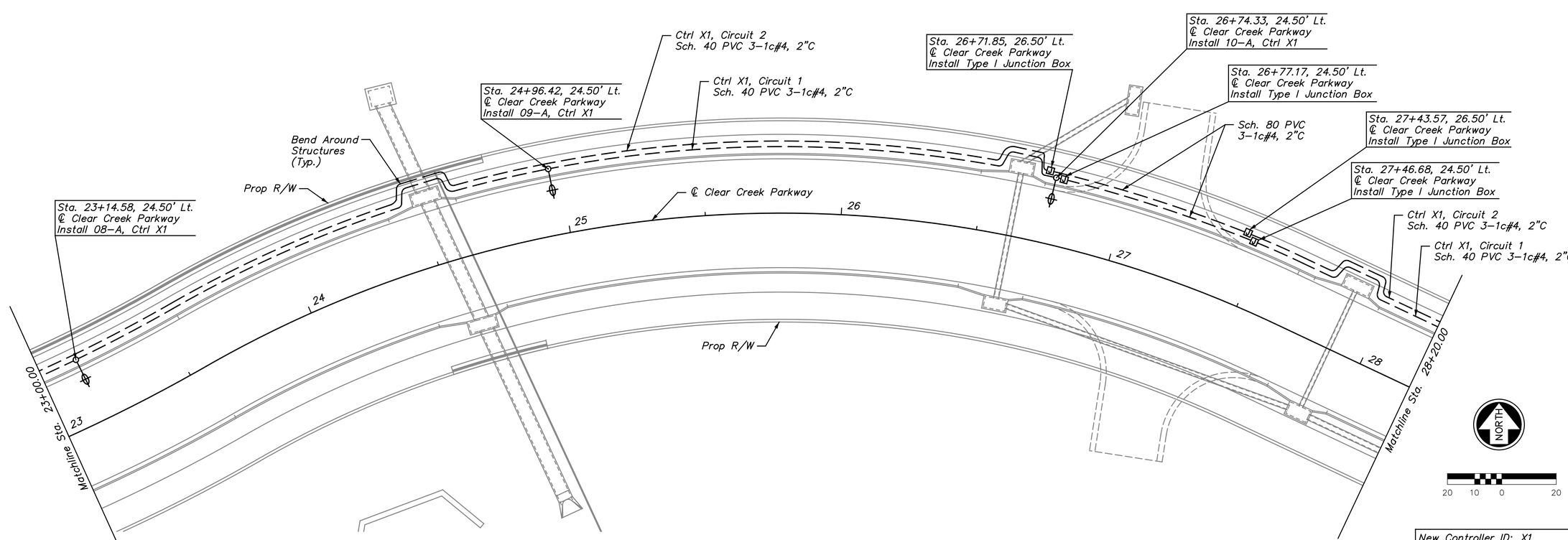

New Controller ID: X1
Address: XXXXX Street

REV.	DATE	REVISIONS	BY	APP'D
1				
2				
3				
4				
5				

Designed By: PRP
Drawn By: JCK/JAA
Checked By: HDL
Issue Date: SEPT. 2016

COPYRIGHT © -2016-SHAFER, KLINE & WARREN INC.

SHAFER, KLINE & WARREN
11250 Corporate Avenue
Lenexa, KS 66219-1392
913.888.7800 FAX: 913.888.7868
SURVEYING | ENGINEERING | CONSTRUCTION

CLEAR CREEK PARKWAY
CITY OF SHAWNEE, KANSAS

STREET LIGHTING PLAN (2)
STA. 17+80.00 TO STA. 28+20.00

150561–010

SHEET NO.
88 OF 182

LAYOUT: MODEL | BY: jadams | DATE: 20–SEP–2016 10:28:12 AM
L:\150561–010_Cad\Civil\Street Lighting\150561–010_STLT–02.dgn

NOT FOR CONSTRUCTION

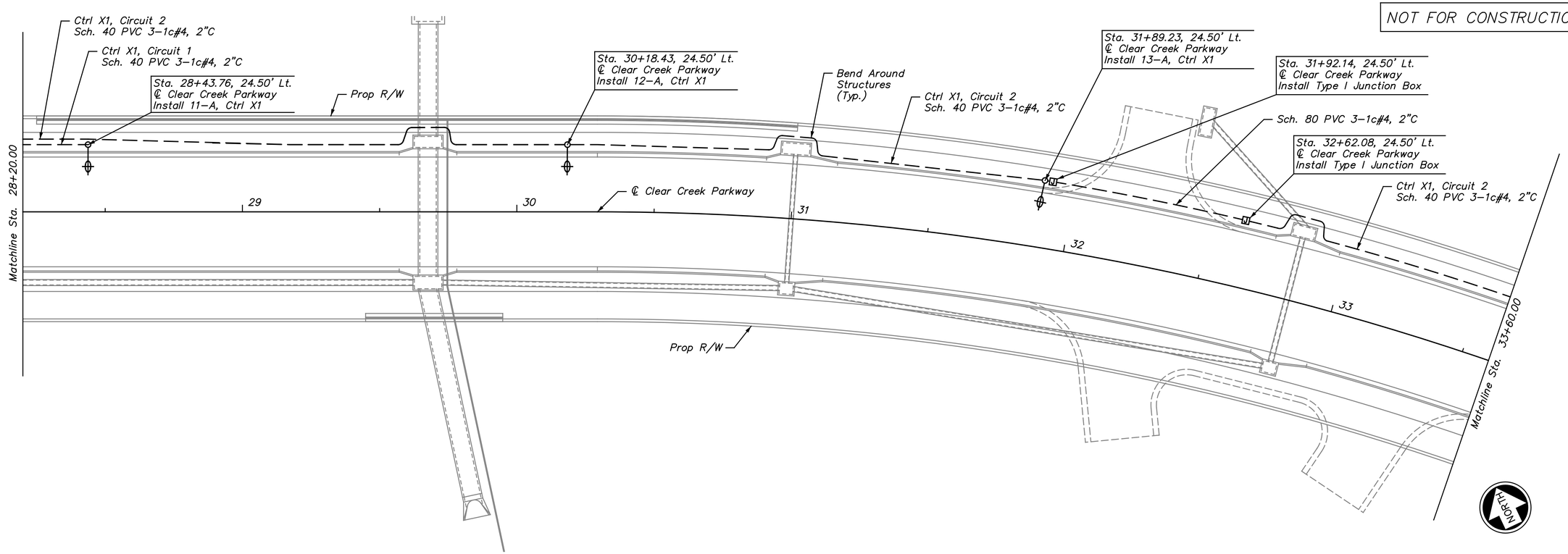

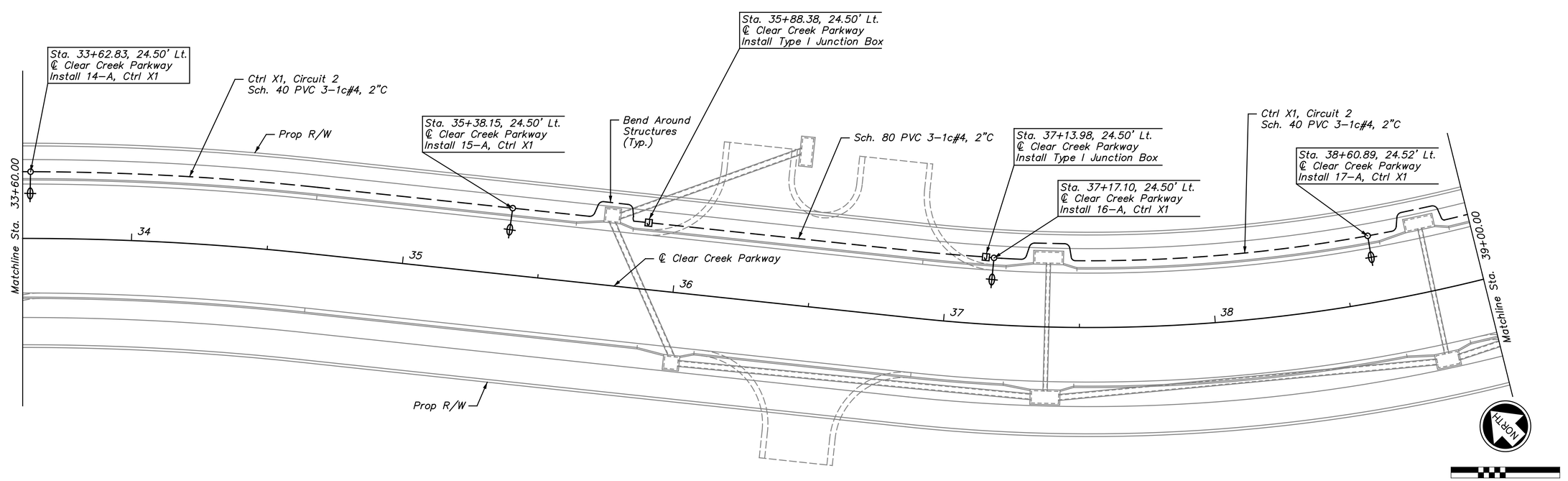

New Controller ID: X1
Address: XXXXX Street

REV.	DATE	REVISIONS	BY	APP'D
1				
2				
3				
4				
5				

Designed By: PRP
Drawn By: JCK/JAA
Checked By: HDL
Issue Date: SEPT. 2016

COPYRIGHT © -2016-SHAFER, KLINE & WARREN INC.

SHAFER, KLINE & WARREN
11250 Corporate Avenue
Lenexa, KS 66219-1392
913.888.7800 FAX: 913.888.7868
SURVEYING | ENGINEERING | CONSTRUCTION

CLEAR CREEK PARKWAY
CITY OF SHAWNEE, KANSAS

STREET LIGHTING PLAN (3)
STA. 28+20.00 TO STA. 39+00.00

150561-010

SHEET NO.
89 OF 182

LAYOUT: MODEL | BY: jadams | DATE: 20-SEP-2016 10:28:15 AM
L:\150561-010_Cad\Civil\Street Lighting\150561-010_STLT-03.dgn

NOT FOR CONSTRUCTION

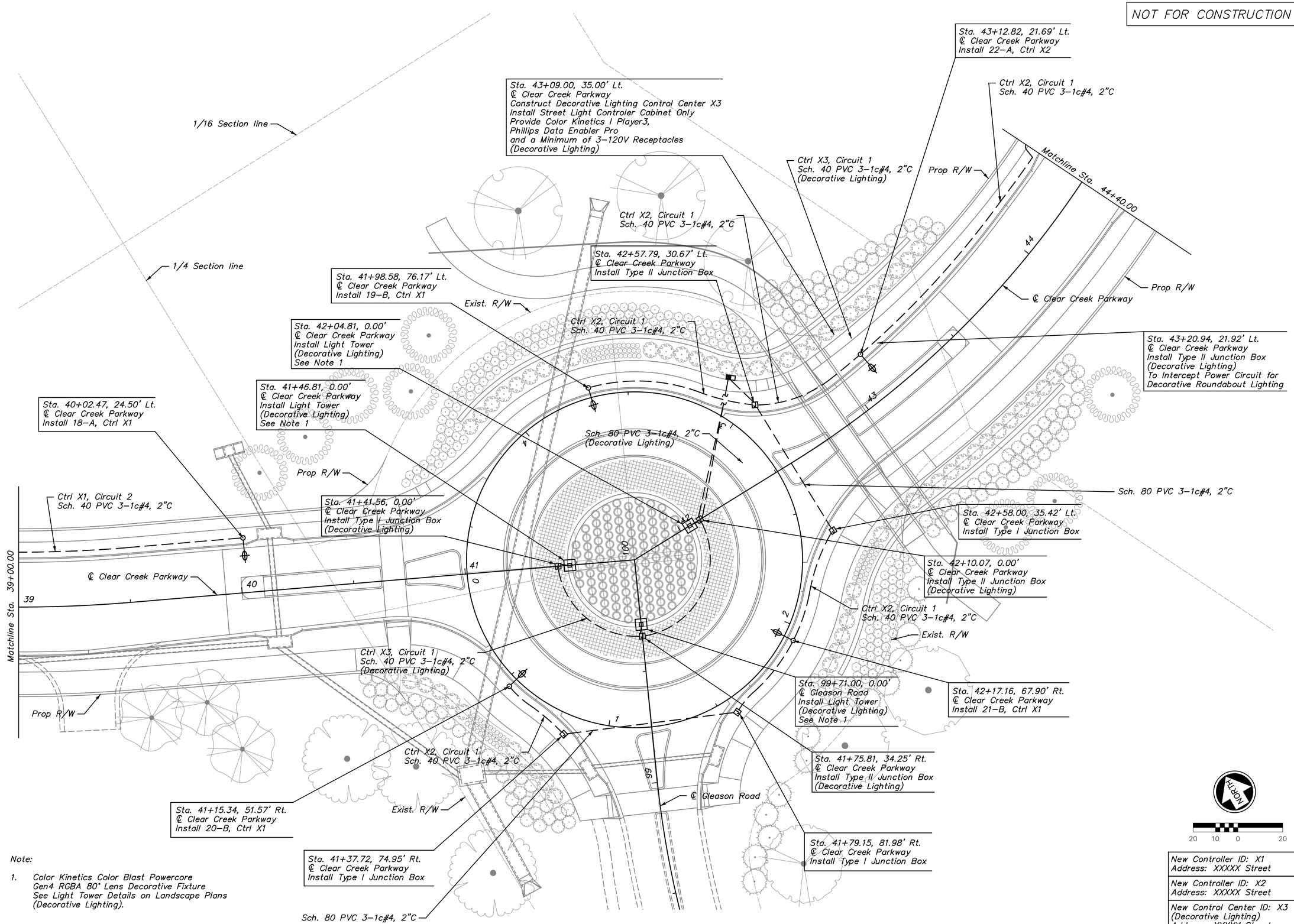

Note:

1. Color Kinetics Color Blast Powercore Gen4 RGBA 80° Lens Decorative Fixture See Light Tower Details on Landscape Plans (Decorative Lighting).

New Controller ID: X1 Address: XXXXX Street
New Controller ID: X2 Address: XXXXX Street
New Control Center ID: X3 (Decorative Lighting) Address: XXXXX Street

REV.	DATE	REVISIONS	BY	APP'D
1				
2				
3				
4				
5				

Designed By: PRP
Drawn By: JCK/JAA
Checked By: HDL
Issue Date: SEPT. 2016

COPYRIGHT © -2016-SHAFER, KLINE & WARREN INC.

SHAFER, KLINE & WARREN
11250 Corporate Avenue
Lenexa, KS 66219-1392
913.888.7800 FAX: 913.888.7868
SURVEYING | ENGINEERING | CONSTRUCTION

CLEAR CREEK PARKWAY
CITY OF SHAWNEE, KANSAS

STREET LIGHTING PLAN (4)
STA. 39+00.00 TO STA. 44+40.00

150561–010

LAYOUT: MODEL | BY: jadams | DATE: 20–SEP–2016 10:28:22 AM
L:\150561–010_Cad\Civil\Street Lighting\150561–010_STLT–04.dgn

NOT FOR CONSTRUCTION

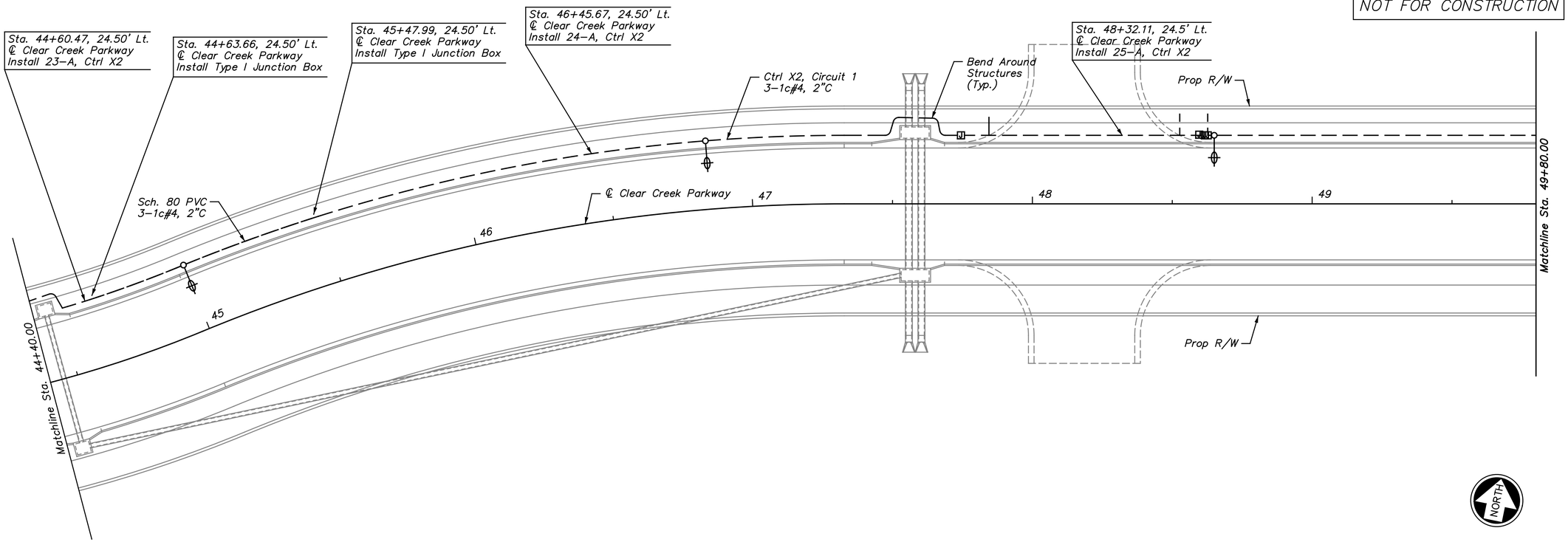

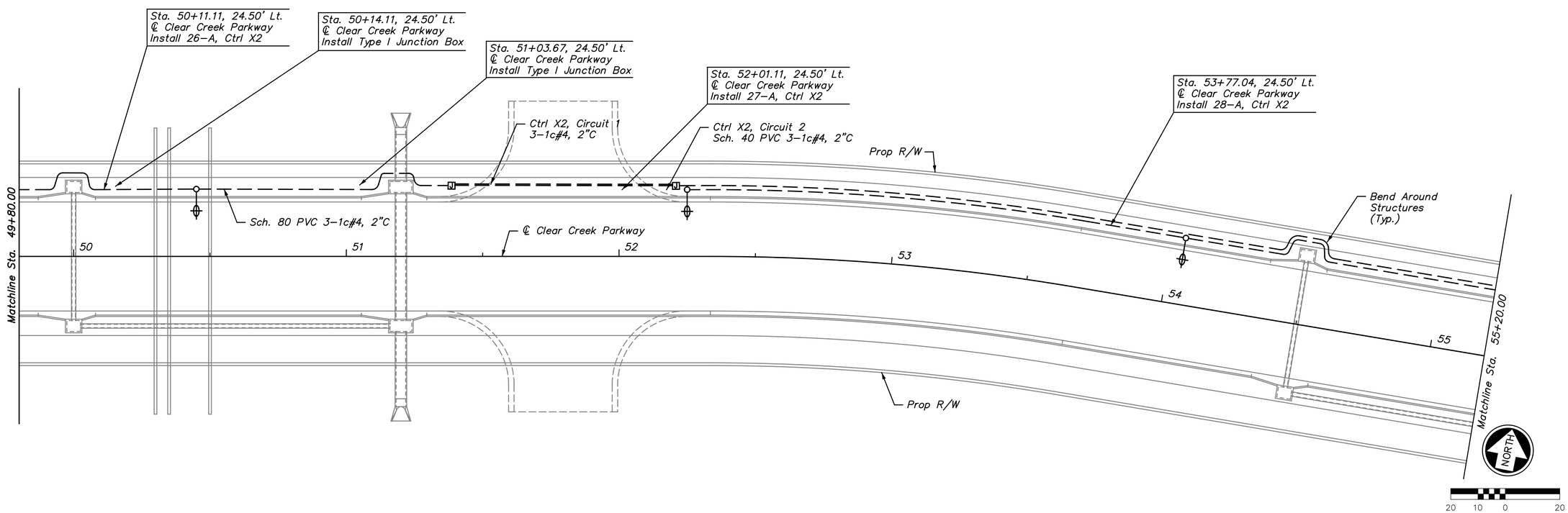

New Controller ID: X2
Address: XXXXX Street

REV.	DATE	REVISIONS	BY	APP'D
1				
2				
3				
4				
5				

COPYRIGHT © -2016-SHAFER, KLINE & WARREN INC.

Designed By: PRP
Drawn By: JCK/JAA
Checked By: HDL
Issue Date: SEPT. 2016

SHAFER, KLINE & WARREN
11250 Corporate Avenue
Lenexa, KS 66219-1392
913.888.7800 FAX: 913.888.7868
SURVEYING | ENGINEERING | CONSTRUCTION

CLEAR CREEK PARKWAY
CITY OF SHAWNEE, KANSAS

STREET LIGHTING PLAN (5)
STA. 44+40.00 TO STA. 55+20.00

150561-010

SHEET NO.
91 OF 182

LAYOUT: MODEL | BY: jadams | DATE: 20-SEP-2016 10:28:26 AM
L:\150561-010_Cad\Civil\Street Lighting\150561-010_STLT-05.dgn

NOT FOR CONSTRUCTION

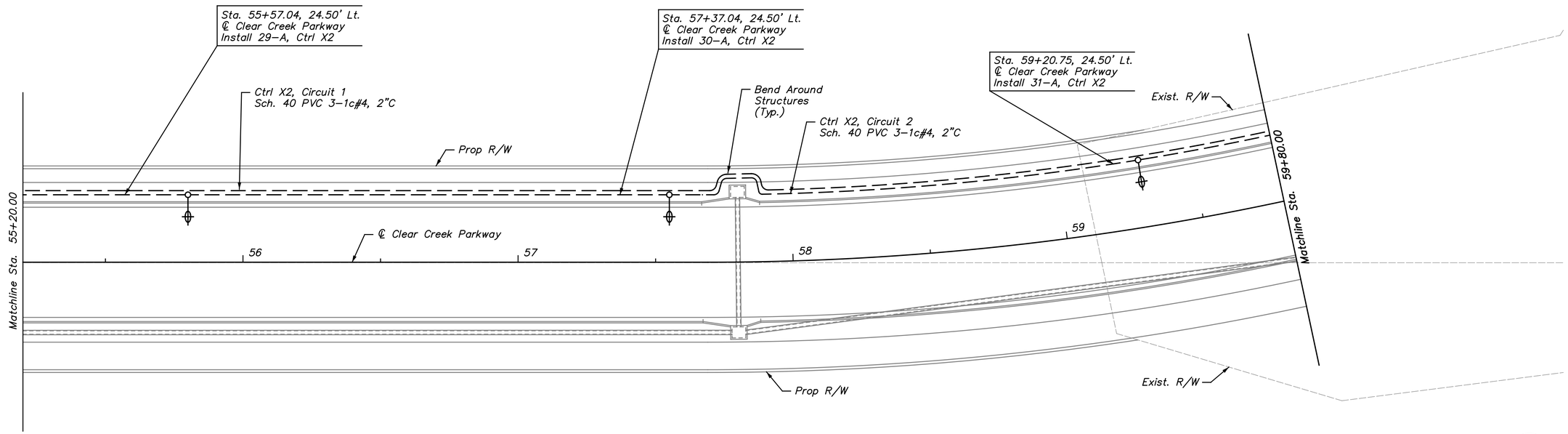

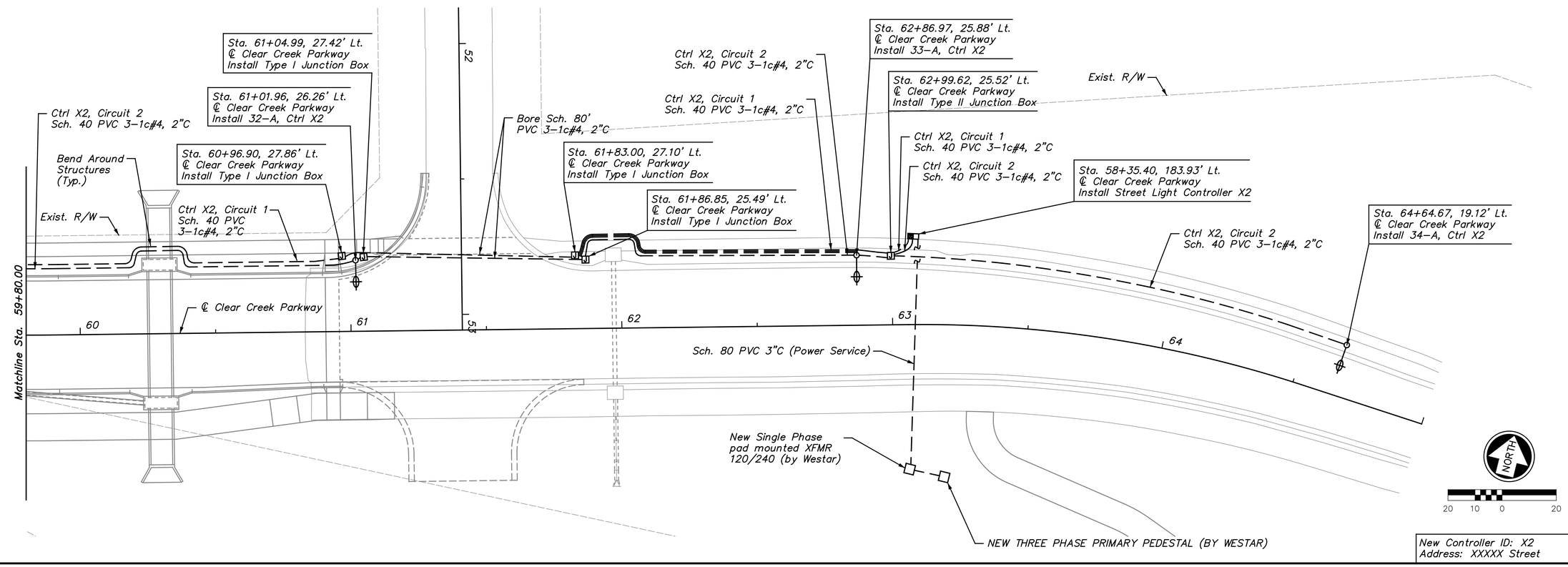

New Controller ID: X2
Address: XXXXX Street

REV.	DATE	REVISIONS	BY	APP'D
5				
4				
3				
2				
1				

Designed By: PRP
Drawn By: JCK/JAA
Checked By: HDL
Issue Date: SEPT. 2016

COPYRIGHT © -2016-SHAFER, KLINE & WARREN INC.

SHAFER, KLINE & WARREN
11250 Corporate Avenue
Lenexa, KS 66219-1392
913.888.7800 FAX: 913.888.7868
SURVEYING | ENGINEERING | CONSTRUCTION

CLEAR CREEK PARKWAY
CITY OF SHAWNEE, KANSAS

STREET LIGHTING PLAN (6)
STA. 55+20.00 TO STA. 64+64.67

150561-010

SHEET NO.
92 OF 182

LAYOUT: MODEL | BY: jadams | DATE: 20-SEP-2016 10:28:33 AM
L:\150561-010_Cad\Civil\Street Lighting\150561-010_STLT-06.dgn

NOT FOR CONSTRUCTION

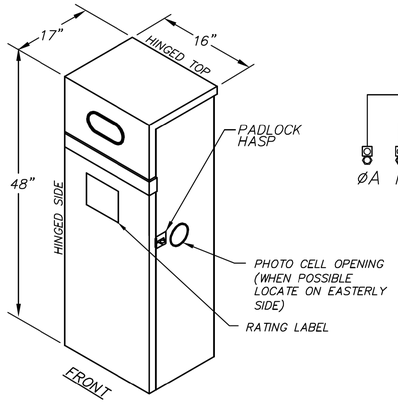

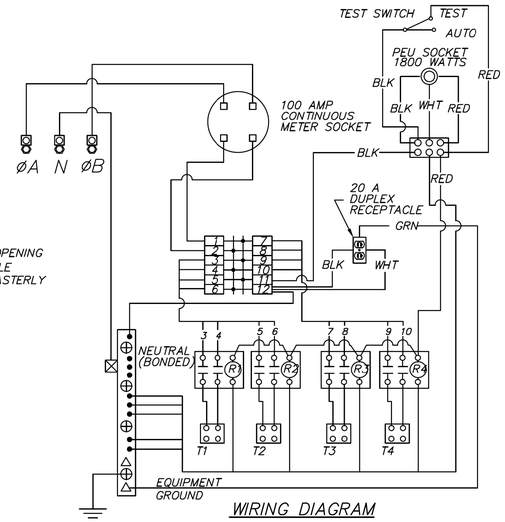

WIRING DIAGRAM

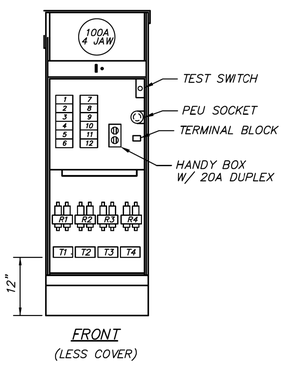

FRONT
(LESS COVER)

CIRCUIT DIRECTORY

NO.	DESCRIPTION	QTY	AMP	POLE
1,2	MAIN	1	100	2
3,4	BRKR. 1	1	20	2
5,6	BRKR. 2	1	20	2
7,8	BRKR. 3	1	20	2
9,10	BRKR. 4	1	20	2
11	BRKR. 5	1	15	1
12	BRKR. 6	1	20	1
	RELAY 1	1	20	2
	RELAY 2	1	20	2
	RELAY 3	1	20	2
	RELAY 4	1	20	2

FOR 200 AMP SERVICE USE 30 AMP BREAKERS AND RELAYS FOR BRANCH CIRCUITS.

PAD MOUNTED CONTROL CENTER

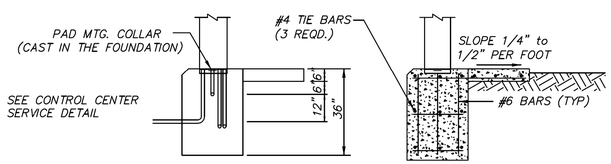

ELEVATION SECTION

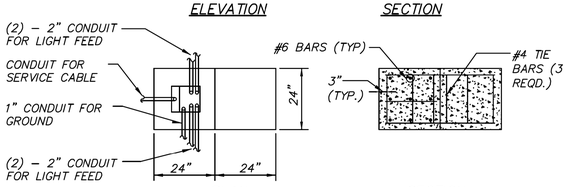

PLAN SECTION

CONTROL CENTER SERVICE NOTES:
1. PROVIDE GROUND RODS AS REQUIRED (2 MIN.) FOR MAXIMUM OF 25 OHMS RESISTANCE TO GROUND.
2. CONCRETE SLAB TO PROVIDE SEMIDRY WORKING AREA IN FRONT OF CONTROLLER CABINET. SLAB NOT REQUIRED WHEN THE FRONT OF THE CABINET ADJOINS A SIDEWALK. TOP OF PAD THE MATCH SIDEWALK ELEVATION. IF DRAINAGE AWAY FROM PAD CAN NOT BE ACHIEVED, NOTIFY CITY ENGINEER BEFORE INSTALLATION OF PAD.

CONCRETE PAD FOUNDATION

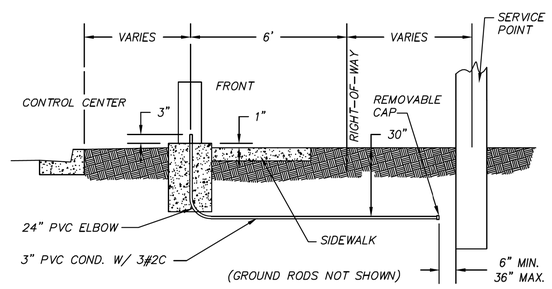

CONTROL CENTER SERVICE NOTES:
1. UL LISTED NONMETALLIC GRAY SCHEDULE 40 PVC CONDUIT SHALL BE INSTALLED FROM THE CONTROL CENTER TO THE SERVICE POINT (POLE, SECONDARY PEDESTAL, OR PAD MOUNT TRANSFORMER) AS DESIGNATED BY KCPL.
2. CONDUIT SHALL BE INSTALL IN ACCORDANCE WITH TRENCHING DETAILS WITH 30" OF COVER BELOW FINISH GRADE.
3. CONDUIT SHALL BE INSTALL IN A STRAIGHT LINE. ONLY TWO VERTICAL 90 DEGREE TURNS AND ONE 90 DEGREE TURN SHALL BE ALLOWED. THE TOTAL CHANGE IN ANGULAR DIRECTION SHALL NOT EXCEED 270 DEGREES.
4. A PULL ROPE SHALL BE INSTALLED IN THE CONDUIT BY THE CONTRACTOR. THE CONTRACTOR SHALL BE RESPONSIBLE FOR REPLACING PULL ROPES THAT BREAK.
5. POWER LEAD-IN CABLE THAT IS INSTALLED BY THE CONTRACTOR PER KCPL SHALL HAVE AN AMPACITY RATING NOT LESS THAN 80% OF THE MAXIMUM RATING OF THE CONTROL CENTER.

CONTROL CENTER SERVICE

SUMMARY OF STREET LIGHTING MATERIALS AND QUANTITIES (1)

BID PROPOSAL ITEM	UNIT	QUANTITY
Control Center - Pad Mounted (Green)	EACH	2
Control Center Foundation	EACH	2
Control Center Ground Rod	EACH	4
Photo Cell (Delay Type)	EACH	2
14' Aluminum Pole (Designation) P140	EACH	
30' Aluminum Pole (Designation) P30_	EACH	1
40' Aluminum Pole (Designation) P40_	EACH	
Type R - Screw -In Foundation for 14' Pole	EACH	
Type T1 - Screw -In Foundation for 30' Pole	EACH	1
Type F1 - Screw -In Foundation for 40' Pole	EACH	
Type F2 - Screw -In Foundation for 40' Pole	EACH	
Concrete Foundation for 14' Pole	EACH	
Concrete Foundation for 30' Pole	EACH	
Concrete Foundation for 40' Pole	EACH	
Cobra Head Luminaire 70 Watt LED	EACH	
Cobra Head Luminaire 150 Watt Induction	EACH	
Cobra Head Luminaire 250 Watt Induction	EACH	
Post-Top Luminaire 64 Watt LED	EACH	
Post-Top Luminaire 80 Watt Induction	EACH	
Type I - Junction Box	EACH	24
Type II - Junction Box	EACH	3
Service Box	EACH	
2" PVC Conduit SCH 40	L.F.	8,285
2" PVC Conduit SCH 80	L.F.	958
2" HDPE Conduit	L.F.	
3" HDPE Conduit	L.F.	
3 - 1c No.4 Type USE Distribution Cable (2)	L.F.	9,984
1 - 1c No.10 Type THHN Pole Wiring Cable	L.F.	2,118
Connector Kit, Fused	EACH	68
Connector Kit, Unfused	EACH	34
Fargo Connector	EACH	102
Cable Theft Deterrent Devices	EACH	34
Remove/Relocate Existing Equipment	LUMP SUM	
LED Luminaire w/138 Watt	EACH	31
LED Luminaire w/176 Watt	EACH	3

NOTES:
(1) These approximate quantities were prepared solely for the Contractor's convenience and are not guaranteed to be a complete list of materials required for this project.
(2) For the total lineal footage of this item, multiply the quantity shown by three.

Date	Revision	By	Appr.
3-1-14	SHAWNEE DESIGN & CONSTRUCTION MANUAL REVISIONS	MRS	MSS
8-21-12	REVISED TO MATCH CONSTRUCTION SPECIFICATION REVISIONS	MRS	PJL

STREET LIGHTING CONTROL CENTER, FOUNDATION, SERVICE FEED, AND SUMMARY OF QUANTITIES

DEVELOPMENT SERVICES

Good Starts Here SHAWNEE KANSAS

DATE:	08-27-2007	3505
DRAWN BY:	MRS	
CHECKED BY:	PJL	SHEET 1 OF 1

REV.	DATE	REVISIONS	BY	APP'D
1				
2				
3				
4				
5				

Designed By: PRP
Drawn By: JCK/JAA
Checked By: HDL
Issue Date: SEPT. 2016

COPYRIGHT © -2016-SHAFER, KLINE & WARREN INC.

SHAFER, KLINE & WARREN
11250 Corporate Avenue
Lenexa, KS 66219-1392
913.888.7800 FAX: 913.888.7868
SURVEYING | ENGINEERING | CONSTRUCTION

CLEAR CREEK PARKWAY
CITY OF SHAWNEE, KANSAS

STREET LIGHTING DETAILS (1)

150561-010

SHEET NO.
93 OF 182

LAYOUT: MODEL | BY: jadams | DATE: 20-SEP-2016 10:28:35 AM
L:\150561-010_Cad\Civil\Street Lighting\150561-010_STLT-DET-01.dgn

NOT FOR CONSTRUCTION

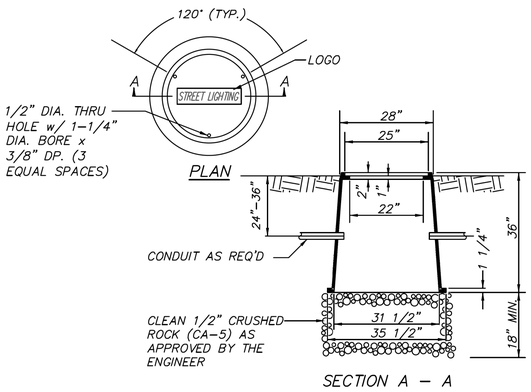

SECTION A – A

NOTES:
1. SERVICE BOX MATERIAL TO BE AN AGGREGATE CONSISTING OF SAND AND GRAVEL BOUND TOGETHER WITH A POLYMER AND REINFORCED WITH A CONTINUOUS WOVEN GLASS STRANDS. THE MATERIAL MUST HAVE THE FOLLOWING MECHANICAL PROPERTIES:
   COMPRESSIVE STRENGTH – 11,000 PSI
   TENSILE STRENGTH – 1700 PSI
   FLEXURAL STRENGTH – 7500 PSI
2. SERVICE BOX WITH ADJUSTABLE TOP RING MAY BE ACCEPTABLE UPON APPROVAL BY THE CITY ENGINEER.

FIBERGLASS REINFORCED POLYMER CONCRETE SERVICE BOX
NO SCALE

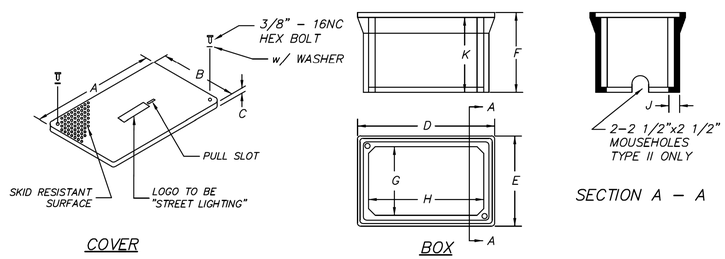

TYPE	DIMENSIONS (IN.)									
	A	B	C	D	E	F	G	H	J	K
I	12 7/8	12 7/8	3/4	14	14	12 3/4	10 1/2	10 1/2	1	12
II	18 1/2	11 1/2	3/4	20 1/2	13 1/2	12	10 1/4	17 1/4	3/8	11 1/4

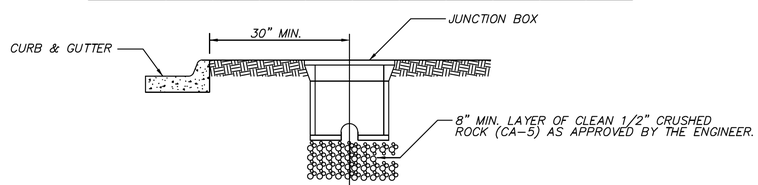

JUNCTION BOX INSTALLATION DETAIL

FIBERGLASS REINFORCED POLYMER CONCRETE JUNCTION BOX DETAILS
NO SCALE

CONDUIT NOTES:

1. THE CONDUIT SHALL BE SIZED ACCORDING TO PLAN.
2. THE CONDUIT SHALL BE SMOOTH WALLED INSIDE AND OUT.
3. A #10 AWG STRANDED USE COPPER LOCATING CABLE SHALL BE LOCATED INSIDE THE CONDUIT.
4. THE CONDUIT SHALL BE BORED UNDER ALL EXISTING PAVEMENTS, UNLESS OTHERWISE APPROVED BY THE ENGINEER.
5. DUCT SEAL SHALL BE APPLIED AT ALL CONDUIT ENTRANCES AFTER INSTALLATION REGARDLESS OF CABLE INSTALLATION OR EMPTY.

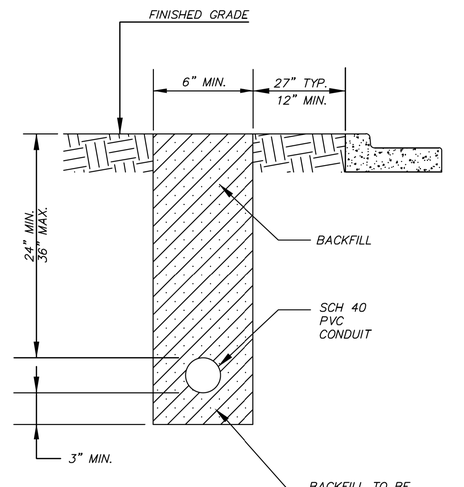

TRENCHING IN UNPAVED AREAS
NO SCALE

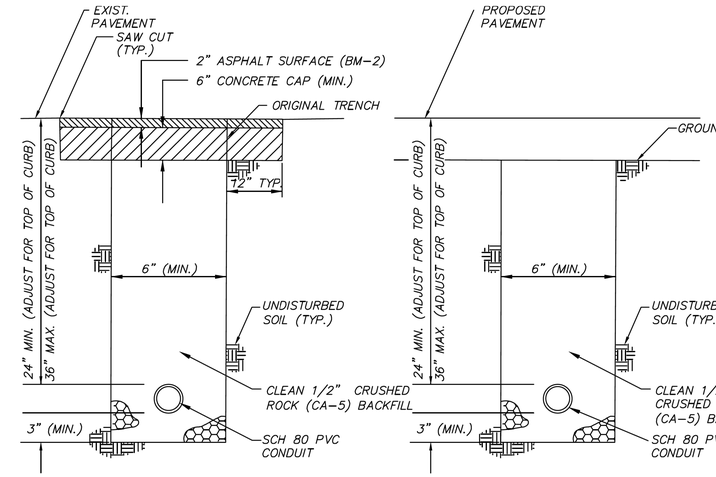

TRENCHING IN EXISTING PAVED AREAS
NO SCALE

TRENCHING IN PROPOSED PAVED AREAS
NO SCALE

TRENCHING NOTES:

GENERAL:
1. CONTRACTOR IS RESPONSIBLE FOR VERIFIYING SITE CONDITIONS AND THE EXTENT OF ROCK EXPECTED.

TRENCHING IN UNPAVED AREAS:
1. TRENCHES IN UNPAVED ARES SHALL BE FILLED WITH A SUITABLE MATERIAL, OTHER THAN AB-3, AND COMPACTED TO NINETY PERCENT (90%) STANDARD DENSITY UNLESS OTHERWISE NOTED. THE FILL MATERIAL SHALL BE FREE OF RUBBLE AND ROCK.
2. THE FINISHED GRADE SHALL BE RESTORED TO THE ORIGINAL OR BETTER CONDITION. THE CONTRACTOR SHALL REPLACE ALL DAMAGED OR DISTURBED EROSION CONTROL MEASURES, INCLUDING PLACING SEED, FERTILIZER AND MULCH ON NEWLY DISTURBED AREAS.

TRENCHING IN EXISTING PAVED AREAS (OPEN CUT):
1. THE CONTRACTOR SHALL NOTIFY THE CITY ENGINEER PRIOR TO SAW CUTTING THE EXISTING PAVEMENT. THE CITY ENGINEER SHALL ALSO BE CONTACTED FOR AN INSPECTION PRIOR TO PLACING BACKFILL AND AGAIN PRIOR TO PLACING THE NEW PAVEMENT.
2. UNLESS OTHERWISE AUTHORIZED BY THE CITY ENGINEER, ALL EXCAVATIONS LEFT OPEN OVERNIGHT ON ANY STREET SHALL BE SECURELY PLATED.
3. THE ACTUAL TRENCH SHALL BE FILLED WITH CLEAN ONE-HALF INCH (1/2") CRUSHED ROCK (CA-5). THE BACKFILL SHALL EXTEND TO THE TOP OF THE UNDISTURBED SOIL UNDER THE EXISTING PAVEMENT.
4. TWELVE INCHES (12") OF PAVEMENT ON BOTH SIDES OF THE ACTUAL TRENCH SHALL BE REMOVED ONLY AFTER THE TRENCH HAS BEEN FILLED AND COMPACTED TO NINETY-FIVE PERCENT (95%) STANDARD DENSITY.
5. A MINIMUM SIX-INCH (6") THICK, CONCRETE CAP SHALL BE PLACED OVER, ACROSS AND ALONG THE ENTIRE LENGTH OF THE ACTUAL TRENCH AND ALLOWED TO CURE FOR A MINIMUM OF SEVENTY-TWO HOURS (72) PRIOR TO PLACING THE ASPHALT SURFACE. THE CAP SHALL EQUAL THE THICKNESS OF THE EXISTING ASPHALT BASE COURSE. THE CAP SHALL BE A HIGH-EARLY STRENGTH PORTLAND CEMENT CONCRETE (CLASS A) HAVING A MINIMUM COMPRESSIVE STRENGTH OF FOUR THOUSAND POUNDS PER SQUARE INCH (4,000 PSI) AT SEVENTY-TWO (72) HOURS.
6. ALL CRUSHED STONE USED AS AGGREGATE FOR CONCRETE SHALL CONFORM TO CITY STANDARDS.
7. A TWO-INCH (2") THICK, ASPHALT SURFACE COURSE (BM-2) SHALL BE PLACED OVER THE CONCRETE CAP.
8. ALL CONSTRUCTION AND MATERIALS SHALL CONFORM TO THE SHAWNEE MANUAL OF TECHNICAL SPECIFICATIONS AND DESIGN CRITERIA.
9. IF THE STREET IS DAMAGED DURING CONSTRUCTION, THE CONTRACTOR SHALL MAKE REPAIRS AS DIRECTED BY THE CITY ENGINEER AND IN ACCORDANCE WITH THE REQUIREMENTS OF THE SHAWNEE MANUAL OF TECHNICAL SPECIFICATIONS AND DESIGN CRITERIA.

TRENCHING IN PROPOSED PAVED AREAS:
1. UNLESS OTHERWISE AUTHORIZED BY THE CITY ENGINEER, TRENCH BACKFILL IN AREAS OF FUTURE STREET CONSTRUCTION SHALL CONFORM TO THIS DETAIL. TRENCH SHALL BE FILLED WITH CLEAN ONE-HALF INCH (1/2") CRUSHED ROCK (CA-5), WHICH SHALL EXTEND TO THE TOP OF THE TRENCH AND TWO FEET (2') BEHIND THE FUTURE CURBS.

TRENCHING
NO SCALE

Date	Revision	By	Appr
3-1-14	SHAWNEE DESIGN & CONSTRUCTION MANUAL REVISIONS	MRS	MSS
8-21-12	REVISED TO MATCH CONSTRUCTION SPECIFICATION REVISIONS	MRS	PJL

STREET LIGHTING
JUNCTION / SERVICE BOX
AND TRENCHING CONDUIT DETAIL

DEVELOPMENT SERVICES

Good Starts Here
SHAWNEE KANSAS

DATE:	08-27-2007	3506
DRAWN BY:	MRS	
CHECKED BY:	PJL	SHEET 1 OF 1

REV.	DATE	REVISIONS	BY	APP'D
5				
4				
3				
2				
1				

COPYRIGHT © -2016-SHAFER, KLINE & WARREN INC.

Designed By: PRP
Drawn By: JCK/JAA
Checked By: HDL
Issue Date: SEPT. 2016

SHAFER, KLINE & WARREN
11250 Corporate Avenue
Lenexa, KS 66219-1392
913.888.7800 FAX: 913.888.7868
SURVEYING | ENGINEERING | CONSTRUCTION

CLEAR CREEK PARKWAY
CITY OF SHAWNEE, KANSAS

STREET LIGHTING DETAILS (2)

150561-010

LAYOUT: MODEL BY: jadams DATE: 20-SEP-2016 10:29:03 AM
L:\150561-010_Cad\Civil\Street Lighting\150561-010_STLT-DET-02.dgn

NOT FOR CONSTRUCTION

TABLE 1 - LUMINAIRE ARM, POLE, SHOE BASE & ANCHOR BOLT DATA

SHAWNEE Designation	Mounting Height (A)	Luminaire Arm(s) Length (B) Arm 1	Luminaire Arm(s) Length (B) Arm 2	Luminaire Arm(s) Type	Pole Shaft Base O.D.	Pole Shaft Top O.D.	Pole Shaft Min. Wall Thickness	Pole Shaft Shaft Length (C)	Shoe Base Bolt Circle (BC)	Anchor Bolt Diameter	Anchor Bolt Length	Anchor Bolt Hook	Screw-In Anchor Foundations
P140	–	–	–	–	6"	3.0"	.0156"	14'-0"	9.50"	0.75"10NC	25"	3"	R
P301	30	6	–	A	7"	4.5"	.0188"	27'-6"	11.00"	1.00" BNC	36"	4"	T1
P302	30	8	–	A	7"	4.5"	0.188"	27'-6"	11.00"	1.00" BNC	36"	4"	T1
P303	30	10	–	B	8"	6.0"	0.188"	26'-8"	11.00"	1.00" BNC	36"	4"	T1
P304	30	12	–	B	8"	6.0"	0.188"	26'-8"	11.00"	1.00" BNC	36"	4"	T1
P305	30	8	8	A	8"	6.0"	0.188"	27'-6"	11.00"	1.00" BNC	36"	4"	T1
P306	30	10	10	B	8"	6.0"	0.219"	26'-8"	11.00"	1.00" BNC	36"	4"	T1
P307	30	12	12	B	8"	6.0"	0.219"	26'-8"	11.00"	1.00" BNC	36"	4"	T1
P401	40	6	–	A	8"	4.5"	0.219"	37'-6"	11.50"	1.00" BNC	36"	4"	F1
P402	40	8	–	A	8"	4.5"	0.219"	37'-6"	11.50"	1.00" BNC	36"	4"	F1
P403	40	10	–	B	8"	6.0"	0.219"	36'-8"	11.50"	1.00" BNC	36"	4"	F1
P404	40	12	–	B	8"	6.0"	0.219"	36'-8"	11.50"	1.00" BNC	36"	4"	F1
P405	40	15	–	B	8"	6.0"	0.219"	36'-8"	11.50"	1.00" BNC	36"	4"	F1
P406	40	8	8/12/15	B	10"	6.0"	0.219"	36'-8"	14.50"	1.00" BNC	48"	4"	F2
P407	40	12	8/12/15	B	10"	6.0"	0.219"	36'-8"	14.50"	1.00" BNC	48"	4"	F2
P408	40	15	8/12/15	B	10"	6.0"	0.219"	36'-8"	14.50"	1.00" BNC	48"	4"	F2

TABLE 1 NOTES:
1) ALL POLES, ARMS, AND MISCELLANEOUS EQUIPMENT SHALL CONFORM TO THESE DETAILS AND AS SPECIFIED IN THE LATEST CITY STANDARD SPECIFICATIONS. THE POLES AND ARMS SHALL BE DIMENSIONED TO ENABLE INTERCHANGEABILITY.
2) POLE SHAFT SHALL HAVE A SATIN GROUND FINISH.
3) ALL HARDWARE (BOLTS, NUTS, WASHERS BUT NOT INCLUDING ANCHOR BOLTS) NOT OTHERWISE SPECIFICALLY DESIGNATED IN THE SPECIFICATIONS OR DETAILS SHALL BE ALUMINUM OR 300-SERIES PASSIVATED STAINLESS STEEL.
4) ANCHOR BOLTS SHALL BE STEEL WITH 50,000 PSI MINIMUM YIELD; TOP 10" MIN. GALVANIZED; INCLUDING ONE NUT EACH AND TWO FLAT WASHERS GALVANIZED TO ASTM A-153 STANDARDS. ANCHOR BOLTS SHALL BE USED WITH CONCRETE FOUNDATIONS. GALVANIZED THREADED STUDS (SEE POLE FOUNDATION DETAIL SHEET) SHALL BE USED WITH SCREW-IN FOUNDATION ANCHOR. 4 BOLTS, 4 NUTS, & 8 WASHERS TO BE PROVIDED WITH EACH POLE.
5) ALL WELDING IS TO BE DONE WITH 4043 WELD WIRE. ALL ARMS AND SHAFTS ARE TO BE HEAT-TREATED TO T6 TEMPER AFTER WELDING.
6) THE INTENT OF THESE MATERIAL RESTRICTIONS IS TO PROVIDE INTERCHANGE ABILITY OF BOTH TYPES OF LUMINAIRE ARMS FOR MOUNTING ON EITHER THE 30' OR 40' POLE.
7) ANCHOR BOLTS/THREADED STUDS SHALL PROJECT ABOVE THE FOUNDATION AS PER MANUFACTURER'S RECOMMENDED PRACTICES, 2.5" TO 3".
8) UNLESS OTHERWISE NOTED, ALL MAST ARMS SHALL BE TYPE A, SINGLE MEMBER ARM.
9) THE ALUMINUM LIGHTING STANDARD INCLUDING ANCHORAGE AND LUMINAIRE SHALL COMPLY WITH THE LATEST CITY STANDARD SPECIFICATIONS AND THE ASSOCIATION OF HIGHWAY OFFICIALS (AASHTO) LOAD WIND LOADING.

MATERIAL DATA

Component	Aluminum Alloy Designation	Specification
Shoe Base	356-T6, Cast	ASTM B26 or B108
Breakaway Couplings	6061-T6, Extruded	1985 AASHTO
Skirt (Breakaway Coupling Assembly)	3003-H14, Sheet	ASTM B209
Bolt Covers	356 or 360, Cast	ASTM B26 or B108
Pole Shaft	6063-T6, Extruded	ASTM B221 or B241
Gound Lug	6061-T5 or 6063-T6, Plate	ASTM B221
Reinforced Handhole Frame	356-T6 or 6061-T6	ASTM B26, B208 or B221
Handhole Cover	6063-T6	ASTM B209, B221 or B241
Luminaire Arm & Tubing Pipes *	6063-T6	ASTM B221, B241 or B429
Luminaire Arm Plate	6061-T6 or 6063-T6 Extruded	ASTM B221
Luminaire Arm Strut* & Arm Connector*	6061-T6 or 6063-T6 Extruded	ASTM B221, B241 or B429
Pole Cap	356, Cast	ASTM B26 or B108
Anchor Bolts	NA	ASTM A-576 Steel, Galvanized per ASTM A-153

*TRUSS-TYPE LUMINAIRE ARMS (TYPE B) ONLY.

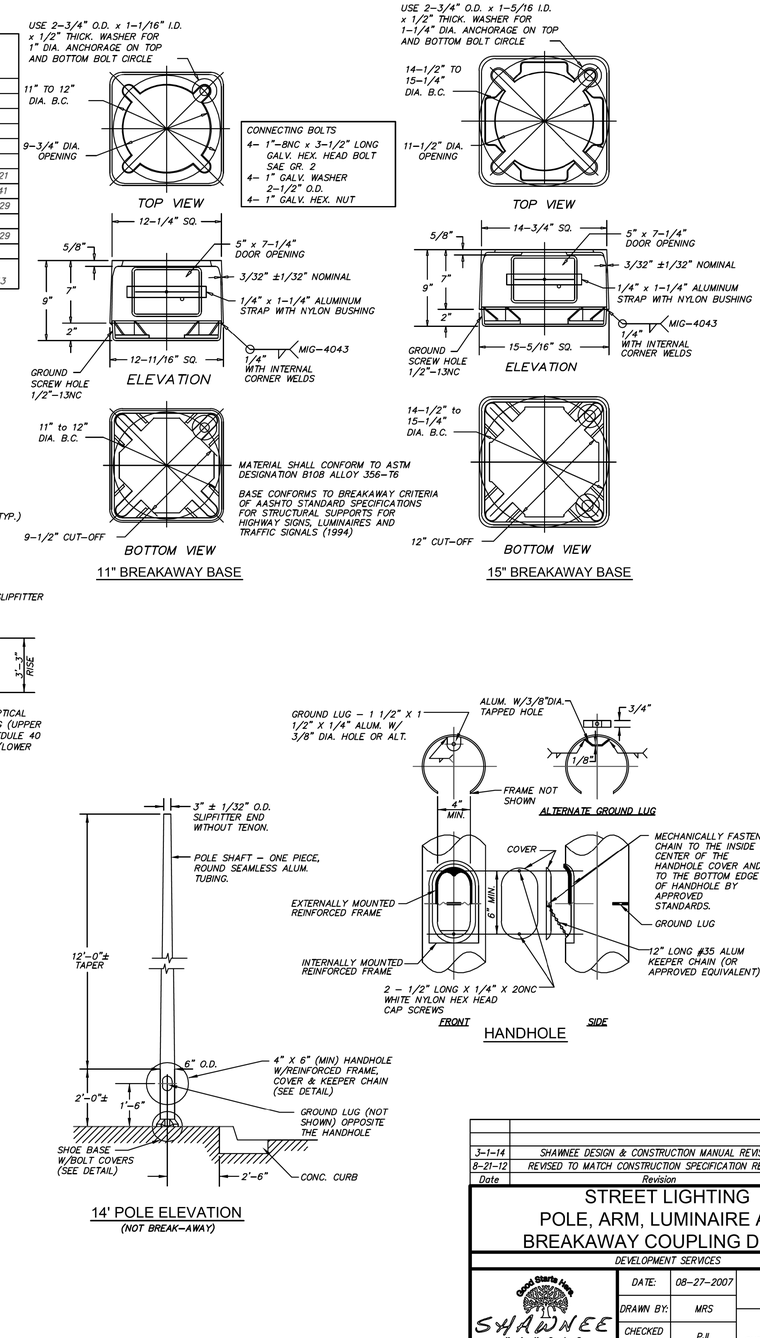

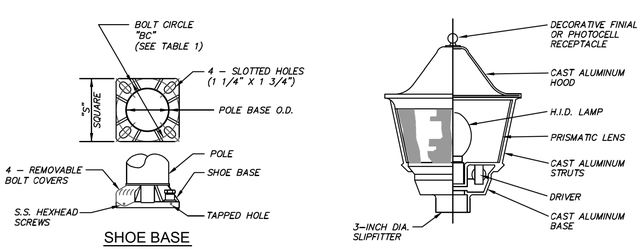

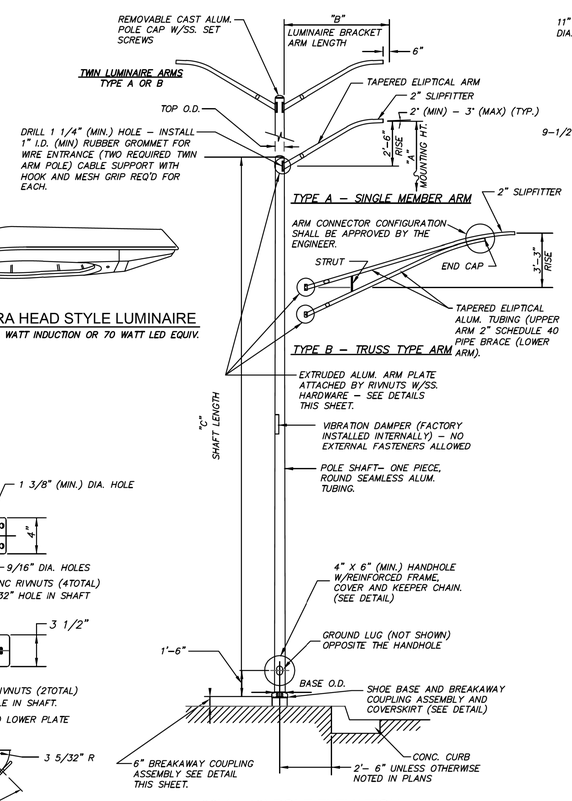

COBRA HEAD STYLE LUMINAIRE
150, 250 WATT INDUCTION OR 70 WATT LED EQUIV.

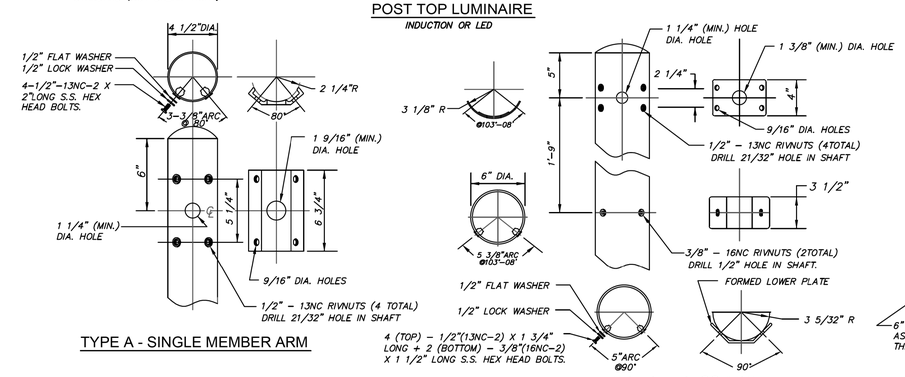

Date	Revision	By	Appr.
3-1-14	SHAWNEE DESIGN & CONSTRUCTION MANUAL REVISIONS	MRS	MSS
8-21-12	REVISED TO MATCH CONSTRUCTION SPECIFICATION REVISIONS	MRS	PJL

STREET LIGHTING
POLE, ARM, LUMINAIRE AND BREAKAWAY COUPLING DETAIL

DEVELOPMENT SERVICES

Good Starts Here. SHAWNEE KANSAS

DATE:	08-27-2007	3507
DRAWN BY:	MRS	
CHECKED BY:	PJL	SHEET 1 OF 1

REV.	DATE	REVISIONS	BY	APP'D
5				
4				
3				
2				
1				

Designed By: PRP
Drawn By: JCK/JAA
Checked By: HDL
Issue Date: SEPT. 2016

COPYRIGHT © -2016-SHAFER, KLINE & WARREN INC.

SHAFER, KLINE & WARREN
11250 Corporate Avenue
Lenexa, KS 66219-1392
913.888.7800 FAX: 913.888.7868
SURVEYING | ENGINEERING | CONSTRUCTION

CLEAR CREEK PARKWAY
CITY OF SHAWNEE, KANSAS

STREET LIGHTING DETAILS (3)

150561-010

SHEET NO.
95 OF 182

LAYOUT: MODEL | BY: jadams | DATE: 20-SEP-2016 10:29:28 AM
L:\150561-010_Cad\Civil\Street Lighting\150561-010_STLT-DET-03.dgn

NOT FOR CONSTRUCTION

SCREW ANCHOR FOUNDATION DETAIL

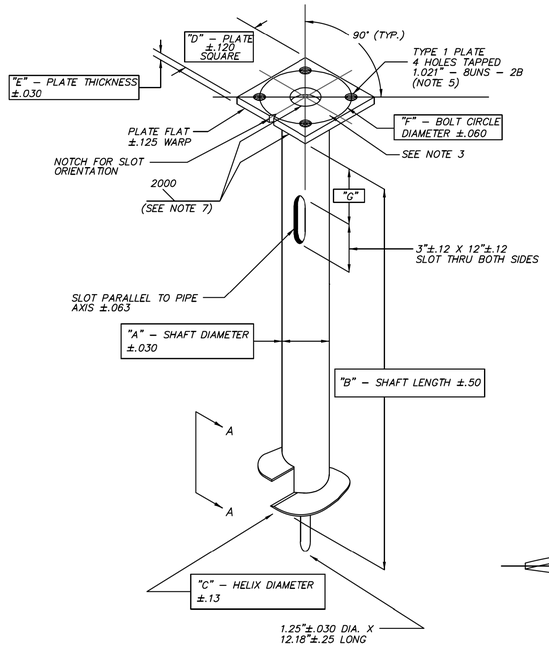

SCREW–IN FOUNDATION

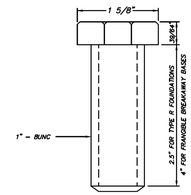

HEX HEAD BOLT

(FOR ALL R TYPE FOUNDATION ANCHORS OR T & F TYPE FOUNDATIONS WHEN USING FRANGIBLE BREAKAWAY BASES)

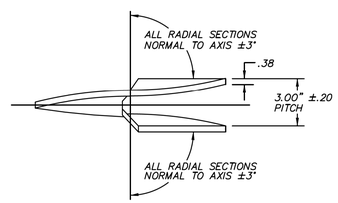

HELIX MUST BE FORMED BY MATCHING METAL DIE

VIEW A–A

(SIDE VIEW OF TRUE HELICAL FORM)

TYPE	POLE TYPE(S)	MAXIMUM TORQUE RATING (lbs ft)	A SHAFT DIA.	B SHAFT LENGTH	C HELIX DIA.	D PLATE SIZE	E PLATE THICKNESS	F BOLT CIRCLE	G SLOT LOCATION
R	P140	15,000	6"	48"	12"	10"	0.75"	9.5"	12"
T1	P301 – P307	15,000	6"	60"	12"	12"	1.0"	11"	18"
F1	P401 – P405	20,000	8"	60"	14"	12"	1.0"	11.5"	18"
F2	P406 – P408	20,000	8"	60"	14"	15"	1.25"	14.5"	18"

NOTES:

1. FINISH: HOT DIP GALVANIZE PER ASTM–A153 (LATEST REVISION).
2. BASEPLATE TO BE PERPENDICULAR TO SHAFT AXIS (±1°) AND HOLE AND CONCENTRIC (±.188 I.D. FIM) TO SHAFT AXIS.
3. ALL BASES SHALL BE IDENTIFIED BY THE MANUFACTURER NAME, ABREVIATION, OR SYMBOL ENGRAVED ON THE SHAFT AND/OR TOP PLATE. THE ANCHOR TYPE (R, T1, F1 & F2) SHALL BE ENGRAVED INTO THE TOP PLATE WITH 1/4" TO 1/2" LETTERING.
4. PILOT POINT AND SHAFT AXES TO BE CONCENTRIC (±.125 FIM) AND IN LINE (±2°).
5. TAP 1" HOLES ON THE SPECIFIED BOLT CIRCLE PERPENDICULAR TO THE BASEPLATE. CLEAN AND CHASE THE THREADS AFTER HOT–DIP GALVANIZING SO THAT A BOLT MAY BE HAND INSTALLED.
6. PREHEAT (ROOM TEMPERATURE 70°F), TUMBLEBLAST, HANDGRIND, AND CLEAN BASEPLATE, HELIX, AND CORE ON ALL WELDED AREAS.
7. FLAMECUT IRREGULARITIES PERMISSIBLE:
   (1) VALLEYS NOT TO EXCEED 3/32 IN. BELOW NOMINAL SURFACE LEVEL.
   (2) PEAKS OR POSITIVE IRREGULARITIES NOT TO EXCEED 1/32 IN. ABOVE NOMINAL SURFACE LEVEL OR INTERSECTIONS OF NOMINAL SURFACES.
8. MANUFACTURER TO HAVE IN EFFECT INDUSTRY RECOGNIZED WRITTEN QUALITY CONTROL FOR ALL MATERIALS AND MANUFACTURING PROCESSES.
9. ALL 30' AND 40' ALUMINUM LIGHT POLES SHALL BE FURNISHED WITH BREAKAWAY POLE DEVICE. BREAKAWAY POLE DEVICES ARE NOT REQUIRED FOR 14' LIGHT POLES.
10. ALL MATERIAL IS TO BE NEW, UNUSED AND MILL TRACEBLE MEETING THE FOLLOWING SPECIFICATIONS:

    BASEPLATE: ASTM A36–(LATEST REVISION) HOT ROLLED STEEL PLATE

    SHAFT: STEEL PIPE PILES, SEAMLESS OR STRAIGHT WELDED, GRADE 2 PER ASTM A252. ALTERNATE MATERIAL: STEEL PIPE TYPE E OR S, GRADE B PER ASTM A53.

    HELIX: ASTM A635–(LATEST REVISION) HOT ROLLED STEEL PLATE

    PILOT POINT: ASTM A575–(LATEST REVISION) HOT ROLLED STEEL

    STUD: ANSI C 1045 HOT ROLLED STEEL. SPECIAL 1" DIAMETER HOT DIP GALVANIZED STUD THREADED AT BOTH ENDS FOR T AND F TYPE FOUNDATIONS WHEN USED WITH BREAKAWAY COUPLINGS.

    BOLT: ASTM A325 OR GRADE 5 SAE J429 – 1" DIAMETER HOT DIP GALVANIZED HEX HEAD BOLT FOR TYPE R SCREW–IN FOUNDATION OR T AND F TYPE FOUNDATIONS WHEN USING FRANGIBLE BREAKAWAY BASES. BOLT SHALL INCLUDE ONE EACH LOCK AND FLAT WASHER.
11. FOR LIGHT POLES WITH SCREW–IN FOUNDATIONS, MINOR LEVELING ADJUSTMENTS MAY BE MADE WITH THE USE OF LEVELING SHIMS OR WASHERS. SHIMS AND WASHERS SHALL BE GALVANIZED OR CADMIUM–PLATED STEEL NO MORE THAN 0.25" THICK. ONLY ONE SHIM OR WASHER WILL BE PERMITTED AT ANY ONE ANCHOR BOLT WITH A MAXIMUM OF TWO PER POLE.

CONCRETE FOUNDATION DETAILS

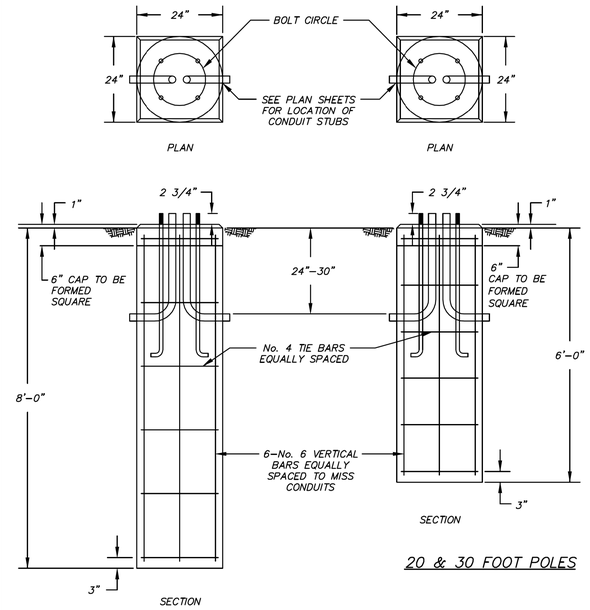

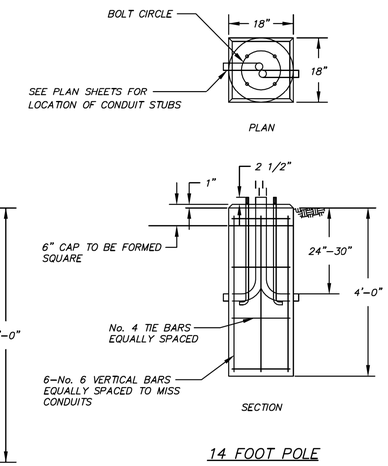

14 FOOT POLE

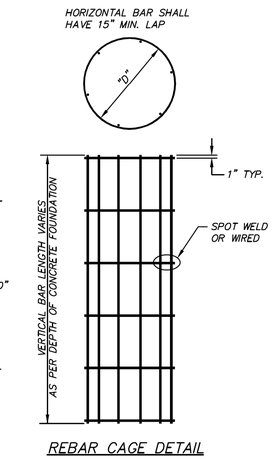

REBAR CAGE DETAIL

REBAR SCHEDULE

FDN. DIA.	FDN. LENGTH	REBAR CIRCLE "D"	VERTICAL REBAR LENGTH	HORIZONTAL REBAR SPACING
18"	4'	14"	3'–6"	14" MAX.
24"	6'	20"	5'–6"	14" MAX.
24"	8'	20"	7'–6"	14" MAX.
36"	8'	30"	7'–8"	12" MAX.
36"	10'	30"	9'–8"	12" MAX.
36"	12'	30"	11'–8"	9" MAX.

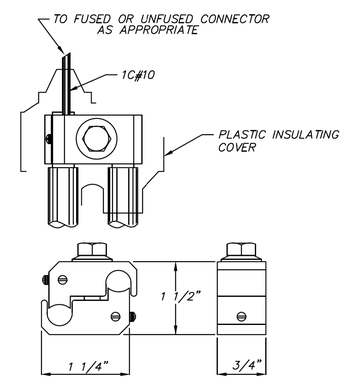

FARGO CONNECTOR

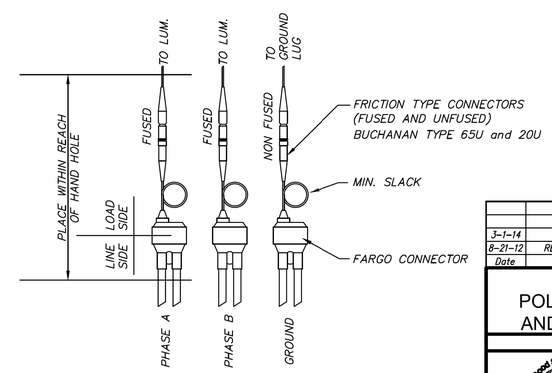

LIGHT POLE BASE WIRING DETAIL

NOTES:

1. CONTRACTOR SHALL TWIST CONDUCTORS BEFORE PLACEMENT OF THEFT DETERRENT DEVICE.
2. KEEP CONDUCTORS SEPARATE WHILE THREADING THROUGH THE CONDUCTOR GUIDES.
3. TIGHTEN CONDUCTOR RETAINER BOLTS TO APPROX 10 FOOT POUNDS. DO NOT OVER–TIGHTEN.

CABLE THEFT DETERRENT DETAIL

Date	Revision	By	Appr.
3–1–14	SHAWNEE DESIGN & CONSTRUCTION MANUAL REVISIONS	MRS	MSS
8–21–12	REVISED TO MATCH CONSTRUCTION SPECIFICATION REVISIONS	MRS	PJL

STREET LIGHTING
POLE FOUNDATION, CONNECTIONS, AND CABLE THEFT DEVICE DETAILS

DEVELOPMENT SERVICES

Good Starts Here. SHAWNEE KANSAS

DATE:	08–27–2007	3508
DRAWN BY:	MRS	
CHECKED BY:	PJL	SHEET 1 OF 1

REV.	DATE	REVISIONS	BY	APP'D
1				
2				
3				
4				
5				

Designed By: PRP
Drawn By: JCK/JAA
Checked By: HDL
Issue Date: SEPT. 2016

COPYRIGHT © –2016–SHAFER, KLINE & WARREN INC.

SHAFER, KLINE & WARREN
11250 Corporate Avenue
Lenexa, KS 66219-1392
913.888.7800 FAX: 913.888.7868
SURVEYING | ENGINEERING | CONSTRUCTION

CLEAR CREEK PARKWAY
CITY OF SHAWNEE, KANSAS

STREET LIGHTING DETAILS (4)

150561–010

SHEET NO.
96 OF 182

LAYOUT: MODEL | BY: jadams | DATE: 20–SEP–2016 10:30:03 AM
L:\150561–010_Cad\Civil\Street Lighting\150561–010_STLT–DET–04.dgn

Notes:

See Pavement Marking Summary Of Quantities For Locations Of Pavement Markings. See Signing Summary Of Quantities For Locations of Signs.

On asphalt pavement, all longitudinal, traverse, diagonal lines are to be Hot Applied Thermoplastic. All legend and sumbols shall be Preformed Thermoplastic.

On concrete pavement, all markings shall be epoxy or multi-component.

NOT FOR CONSTRUCTION

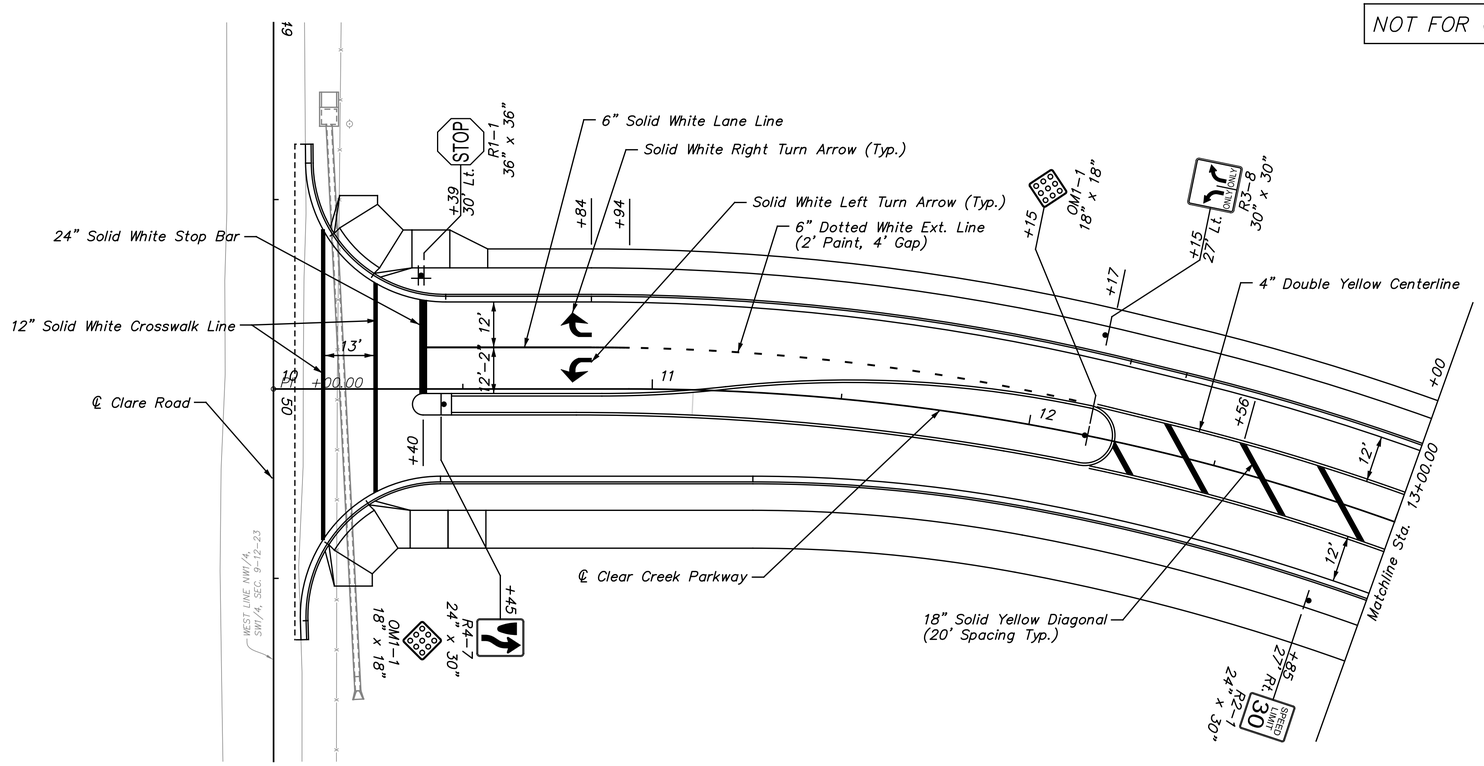

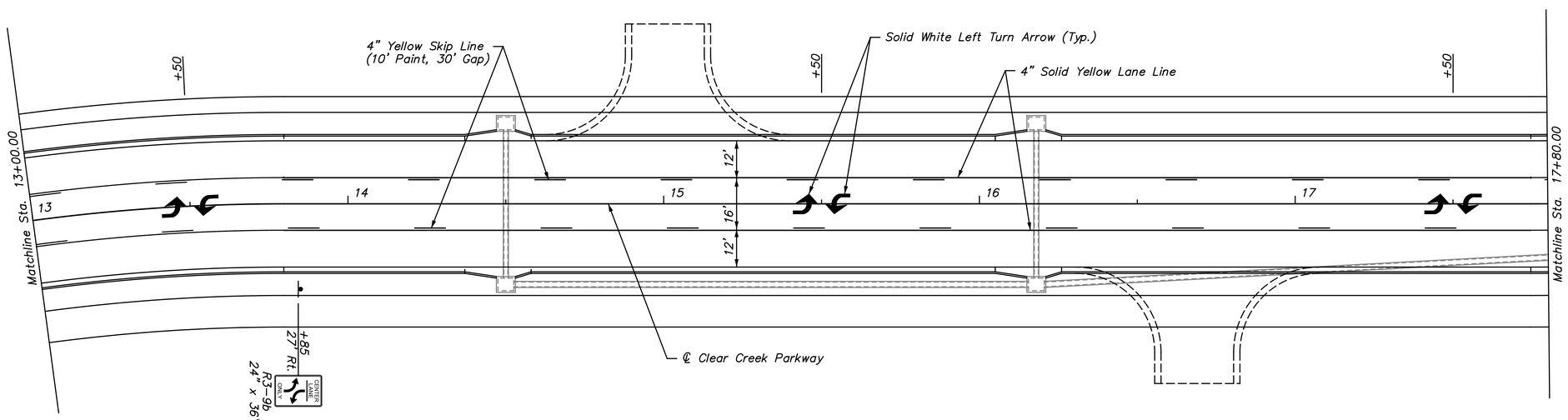

REV.	DATE	REVISIONS	BY	APP'D
1				
2				
3				
4				
5				

Designed By: PRP
Drawn By: JCK/JAA
Checked By: HDL
Issue Date: SEPT. 2016

COPYRIGHT © -2016-SHAFER, KLINE & WARREN INC.

SHAFER, KLINE & WARREN
11250 Corporate Avenue
Lenexa, KS 66219-1392
913.888.7800 FAX: 913.888.7868
SURVEYING | ENGINEERING | CONSTRUCTION

CLEAR CREEK PARKWAY
CITY OF SHAWNEE, KANSAS

PAVEMENT MARKING & SIGNING PLAN (1)
STA. 10+00.00 TO STA. 17+80.00

150561-010

LAYOUT: MODEL | BY: jadams | DATE: 20-SEP-2016 10:30:33 AM
L:\150561-010_Cad\Civil\Pavement Marking Signing\150561-010_PMK-01.dgn

NOT FOR CONSTRUCTION

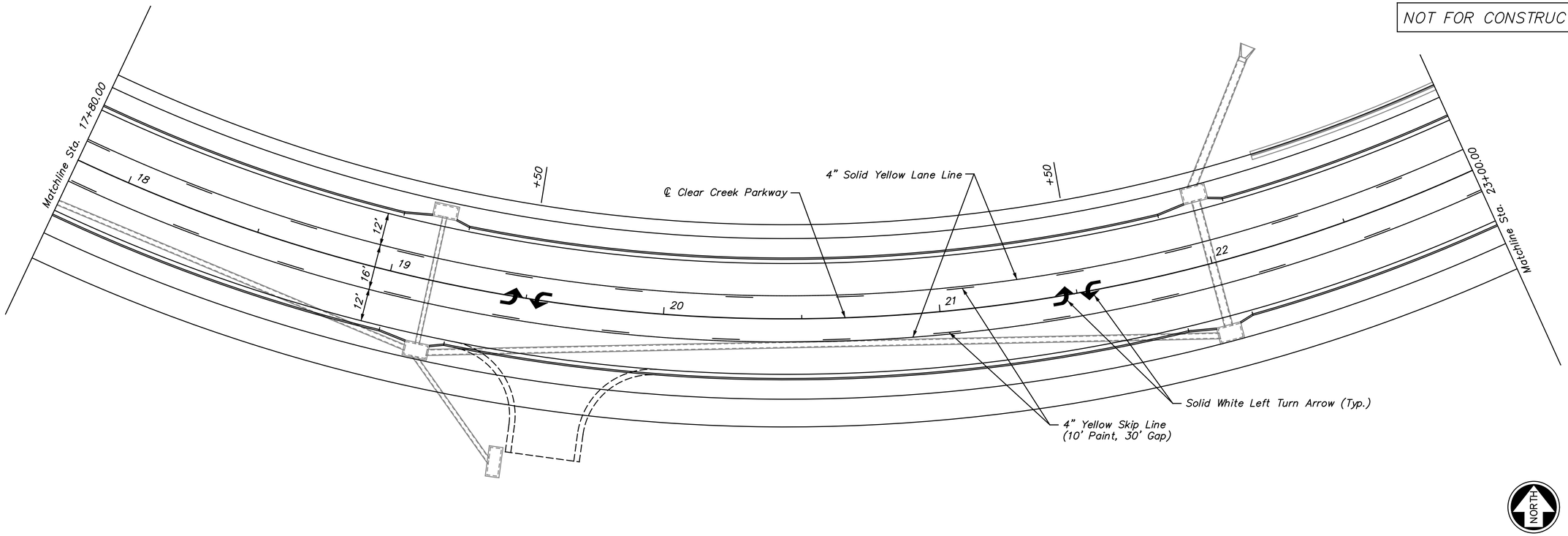

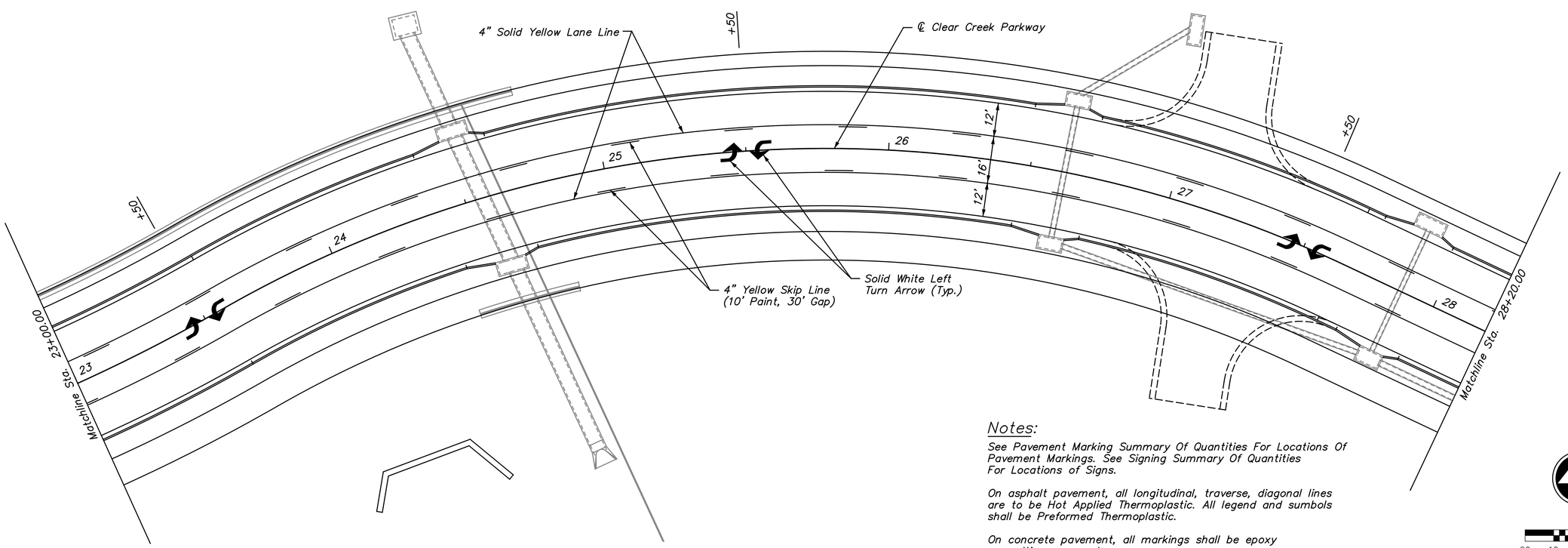

Notes:

See Pavement Marking Summary Of Quantities For Locations Of Pavement Markings. See Signing Summary Of Quantities For Locations of Signs.

On asphalt pavement, all longitudinal, traverse, diagonal lines are to be Hot Applied Thermoplastic. All legend and sumbols shall be Preformed Thermoplastic.

On concrete pavement, all markings shall be epoxy or multi-component.

REV.	DATE	REVISIONS	BY	APP'D
1				
2				
3				
4				
5				

Designed By: PRP
Drawn By: JCK/JAA
Checked By: HDL
Issue Date: SEPT. 2016

COPYRIGHT © -2016-SHAFER, KLINE & WARREN INC.

SHAFER, KLINE & WARREN
11250 Corporate Avenue
Lenexa, KS 66219-1392
913.888.7800 FAX: 913.888.7868
SURVEYING | ENGINEERING | CONSTRUCTION

CLEAR CREEK PARKWAY
CITY OF SHAWNEE, KANSAS

PAVEMENT MARKING & SIGNING PLAN (2)
STA. 17+80.00 TO STA. 28+20.00

150561-010

LAYOUT: MODEL | BY: jadams | DATE: 20-SEP-2016 10:30:35 AM
L:\150561-010_Cad\Civil\Pavement Marking Signing\150561-010_PMK-02.dgn

NOT FOR CONSTRUCTION

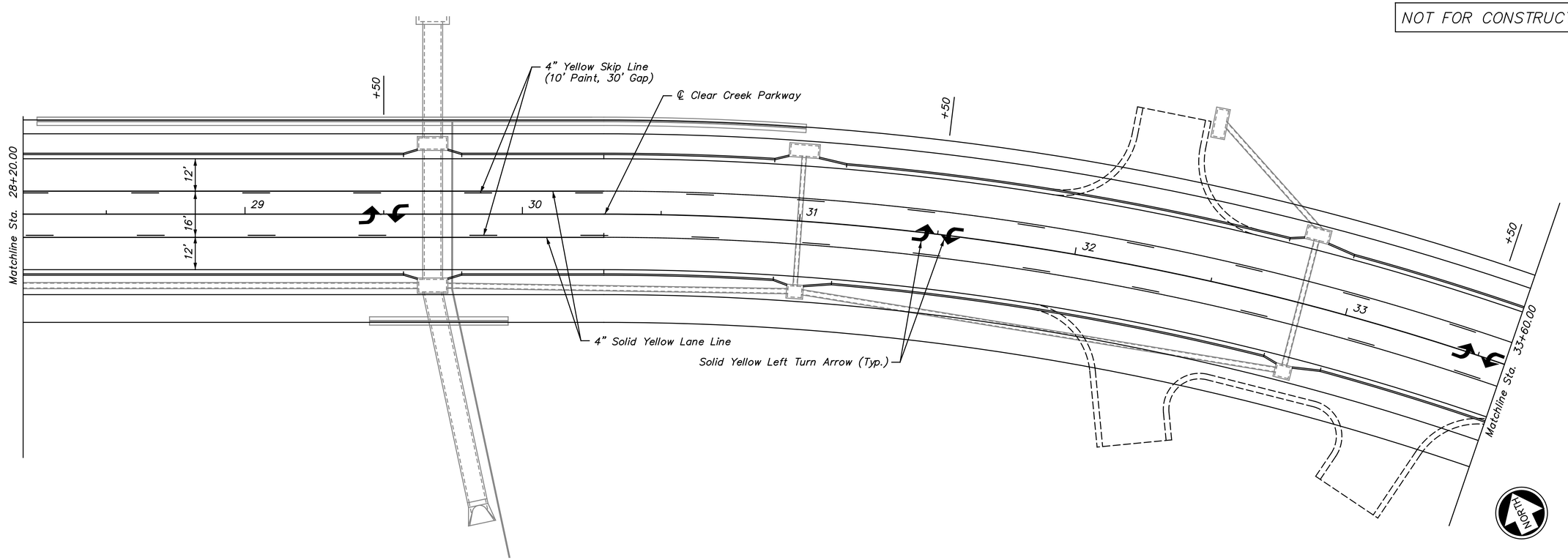

Notes:

See Pavement Marking Summary Of Quantities For Locations Of Pavement Markings. See Signing Summary Of Quantities For Locations of Signs.

On asphalt pavement, all longitudinal, traverse, diagonal lines are to be Hot Applied Thermoplastic. All legend and sumbols shall be Preformed Thermoplastic.

On concrete pavement, all markings shall be epoxy or multi-component.

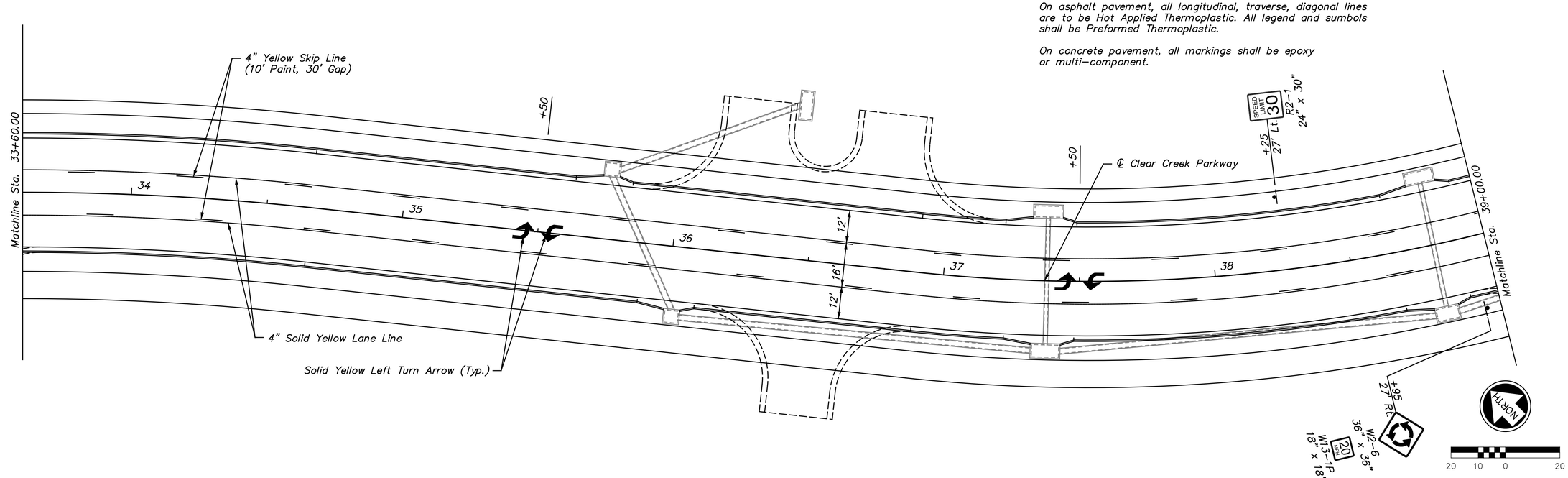

REV.	DATE	REVISIONS	BY	APP'D
1				
2				
3				
4				
5				

Designed By: PRP
Drawn By: JCK/JAA
Checked By: HDL
Issue Date: SEPT. 2016

COPYRIGHT © -2016-SHAFER, KLINE & WARREN INC.

SHAFER, KLINE & WARREN
11250 Corporate Avenue
Lenexa, KS 66219-1392
913.888.7800 FAX: 913.888.7868
SURVEYING | ENGINEERING | CONSTRUCTION

CLEAR CREEK PARKWAY
CITY OF SHAWNEE, KANSAS

PAVEMENT MARKING & SIGNING PLAN (3)
STA. 28+20.00 TO STA. 39+00.00

150561-010

SHEET NO.
99 OF 182

LAYOUT: MODEL | BY: jadams | DATE: 20-SEP-2016 10:30:41 AM
L:\150561-010_Cad\Civil\Pavement Marking Signing\150561-010_PMK-03.dgn

NOT FOR CONSTRUCTION

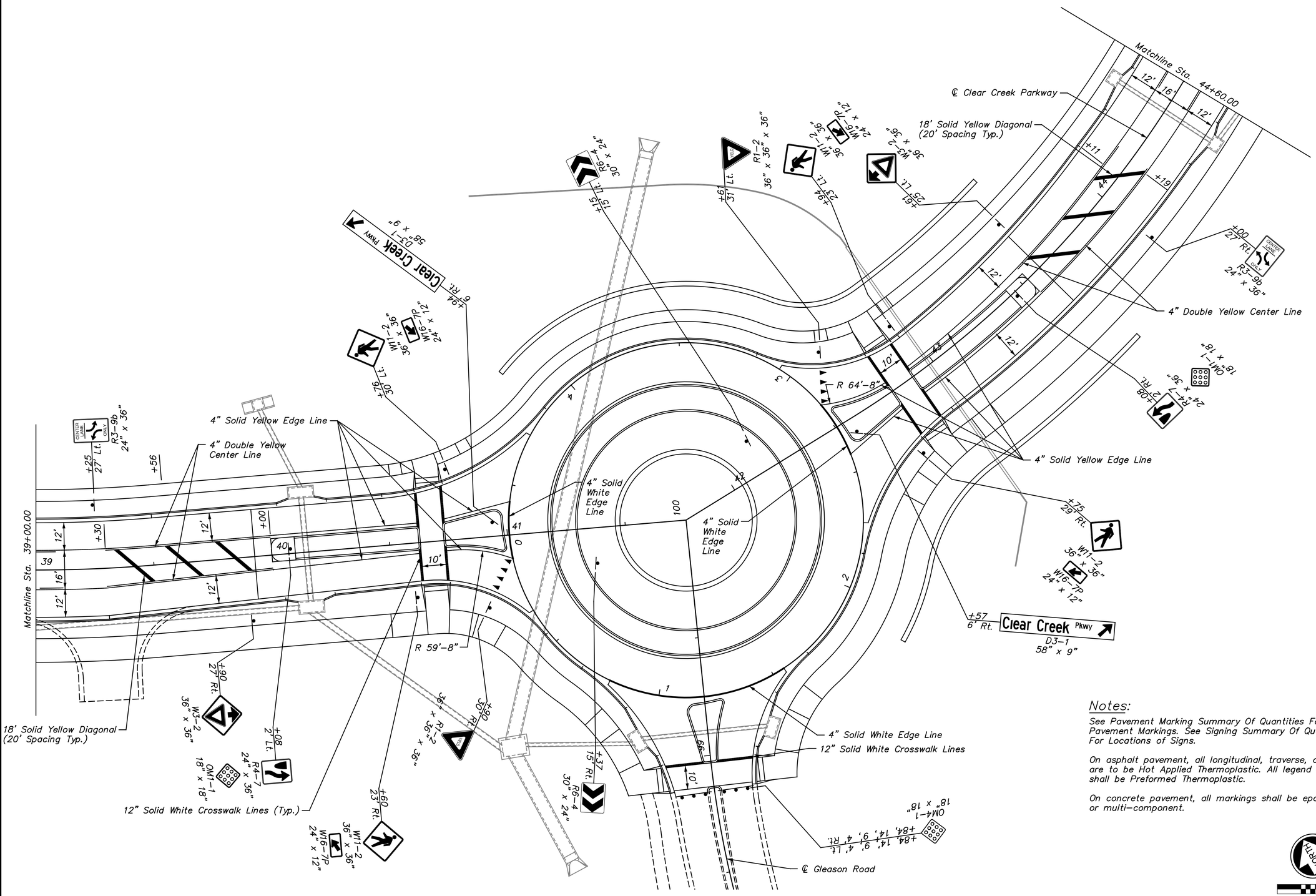

Notes:

See Pavement Marking Summary Of Quantities For Locations Of Pavement Markings. See Signing Summary Of Quantities For Locations of Signs.

On asphalt pavement, all longitudinal, traverse, diagonal lines are to be Hot Applied Thermoplastic. All legend and sumbols shall be Preformed Thermoplastic.

On concrete pavement, all markings shall be epoxy or multi-component.

REV.	DATE	REVISIONS	BY	APP'D
1				
2				
3				
4				
5				

Designed By: PRP
Drawn By: JCK/JAA
Checked By: HDL
Issue Date: SEPT. 2016

COPYRIGHT © -2016-SHAFER, KLINE & WARREN INC.

SHAFER, KLINE & WARREN
11250 Corporate Avenue
Lenexa, KS 66219-1392
913.888.7800 FAX: 913.888.7868
SURVEYING | ENGINEERING | CONSTRUCTION

CLEAR CREEK PARKWAY
CITY OF SHAWNEE, KANSAS

PAVEMENT MARKING & SIGNING PLAN (4)
STA. 39+00.00 TO STA. 44+60.00

150561-010

LAYOUT: MODEL | BY: jadams | DATE: 20-SEP-2016 10:30:43 AM
L:\150561-010_Cad\Civil\Pavement Marking Signing\150561-010_PMMK-04.dgn

NOT FOR CONSTRUCTION

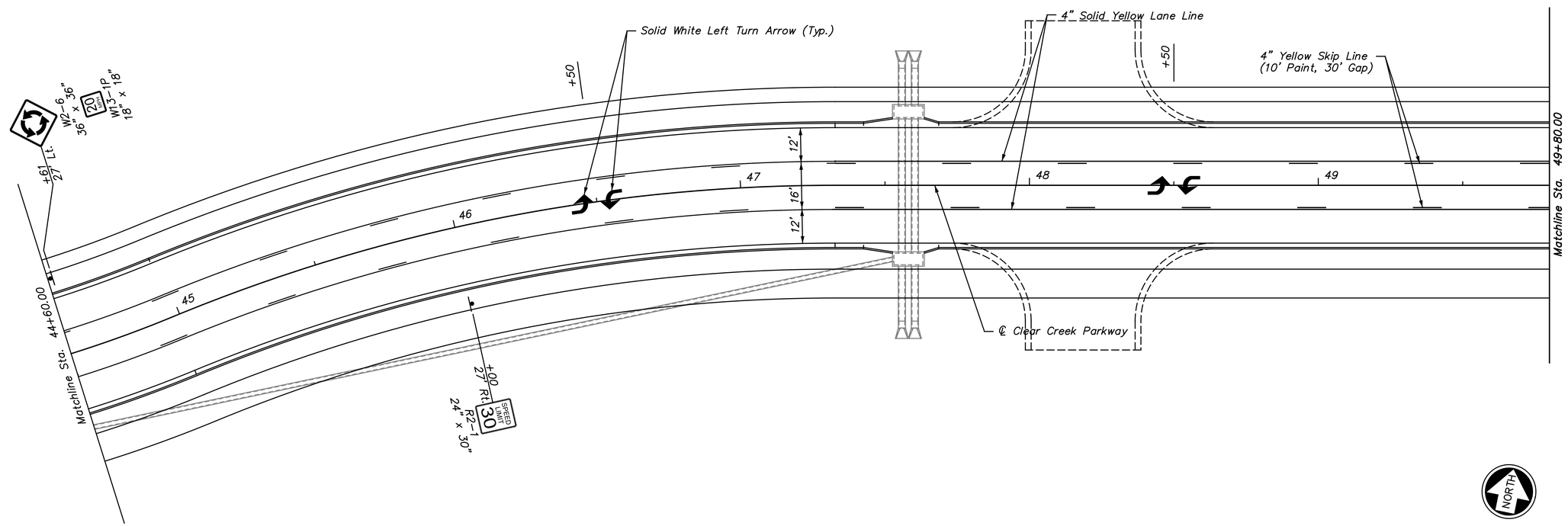

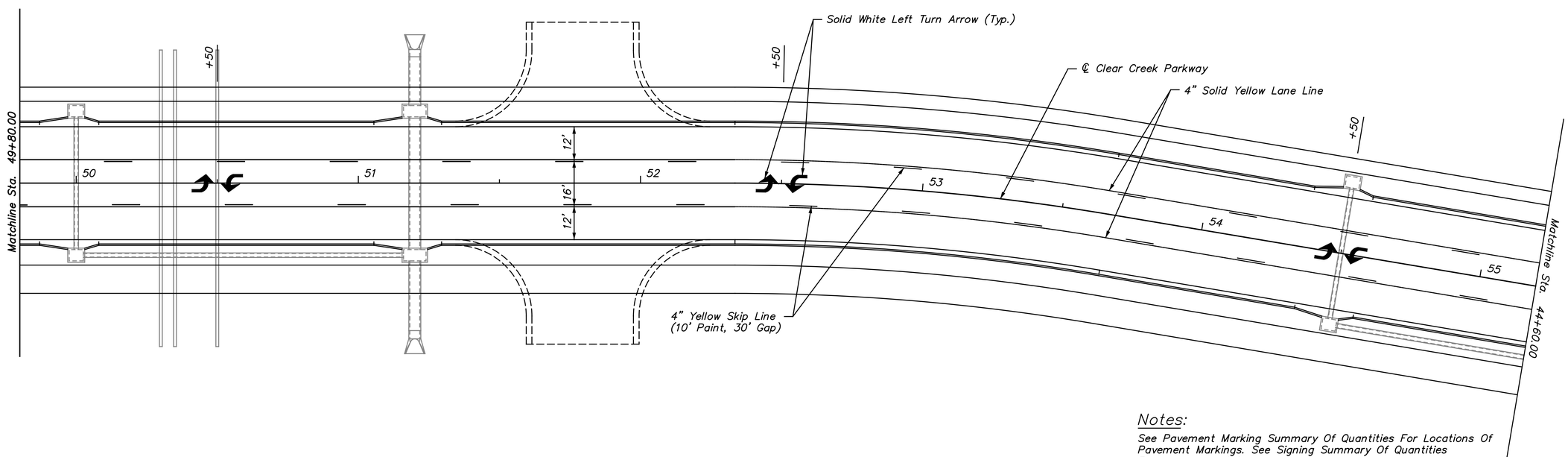

Notes:

See Pavement Marking Summary Of Quantities For Locations Of Pavement Markings. See Signing Summary Of Quantities For Locations of Signs.

On asphalt pavement, all longitudinal, traverse, diagonal lines are to be Hot Applied Thermoplastic. All legend and sumbols shall be Preformed Thermoplastic.

On concrete pavement, all markings shall be epoxy or multi-component.

REV.	DATE	REVISIONS	BY	APP'D
1				
2				
3				
4				
5				

Designed By: PRP
Drawn By: JCK/JAA
Checked By: HDL
Issue Date: SEPT. 2016

COPYRIGHT © -2016-SHAFER, KLINE & WARREN INC.

SHAFER, KLINE & WARREN
11250 Corporate Avenue
Lenexa, KS 66219-1392
913.888.7800 FAX: 913.888.7868
SURVEYING | ENGINEERING | CONSTRUCTION

CLEAR CREEK PARKWAY
CITY OF SHAWNEE, KANSAS

PAVEMENT MARKING & SIGNING PLAN (5)
STA. 44+60.00 TO STA. 44+60.00

150561-010

SHEET NO.
101 OF 182

LAYOUT: MODEL | BY: jadams | DATE: 20-SEP-2016 10:30:45 AM
L:\150561-010_Cad\Civil\Pavement Marking Signing\150561-010_PWMK-05.dgn

NOT FOR CONSTRUCTION

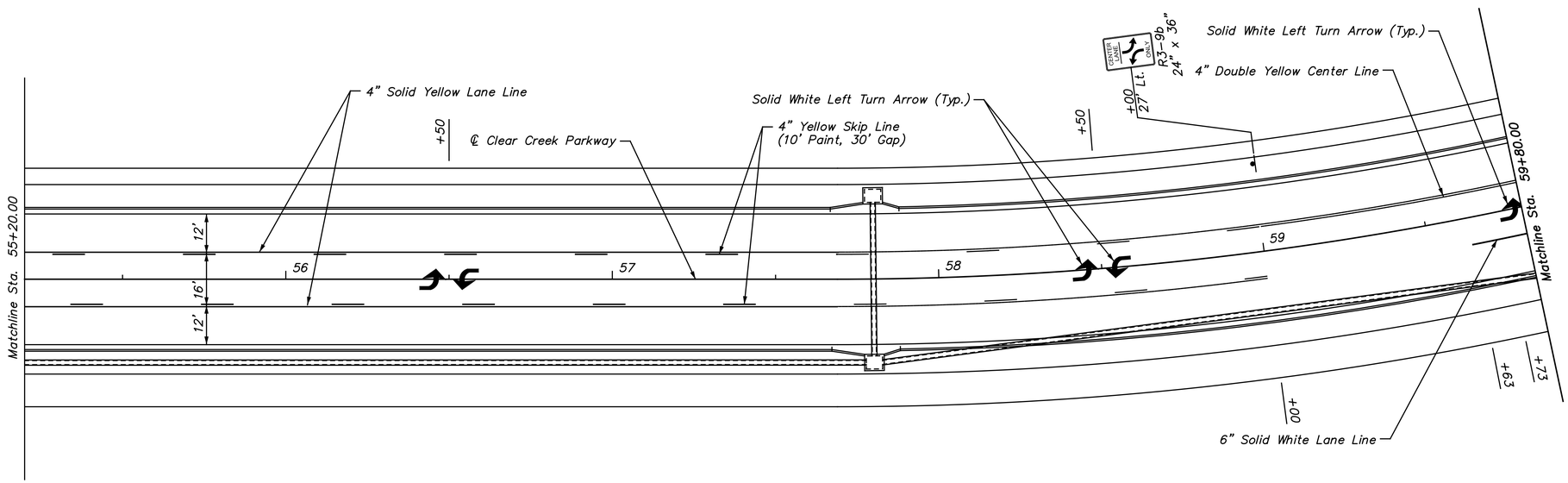

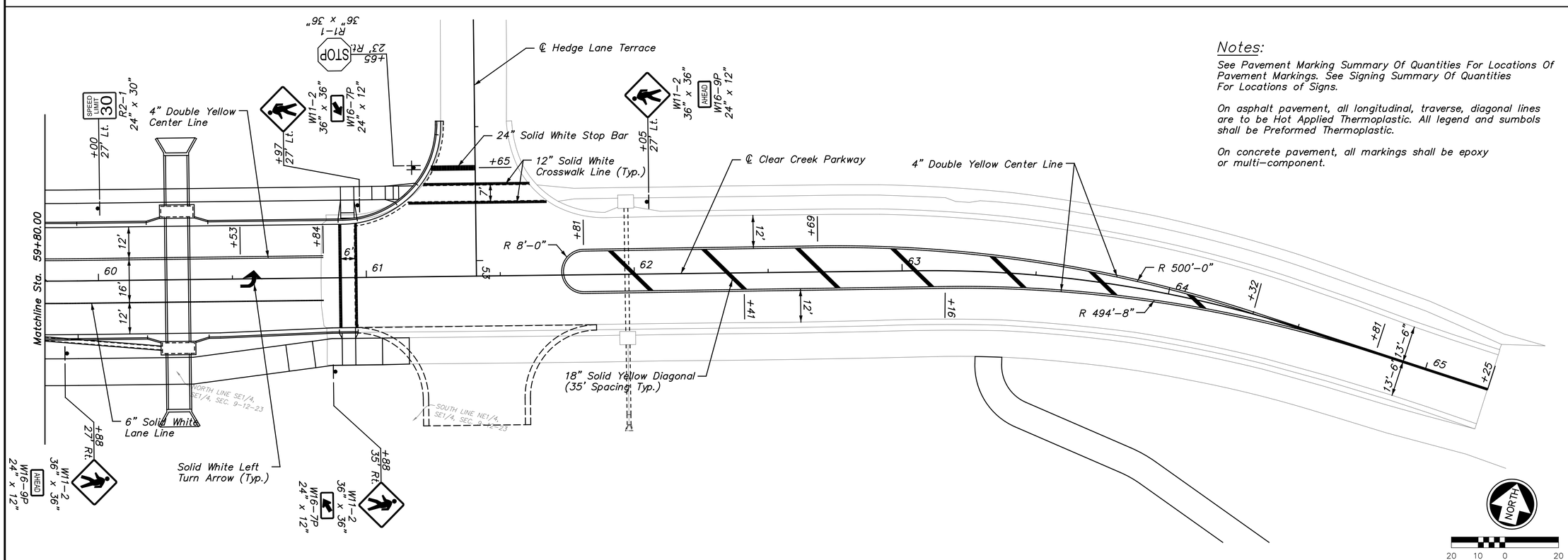

Notes:

See Pavement Marking Summary Of Quantities For Locations Of Pavement Markings. See Signing Summary Of Quantities For Locations of Signs.

On asphalt pavement, all longitudinal, traverse, diagonal lines are to be Hot Applied Thermoplastic. All legend and sumbols shall be Preformed Thermoplastic.

On concrete pavement, all markings shall be epoxy or multi-component.

REV.	DATE	REVISIONS	BY	APP'D
1				
2				
3				
4				
5				

COPYRIGHT © -2016-SHAFER, KLINE & WARREN INC.

Designed By: PRP
Drawn By: JCK/JAA
Checked By: HDL
Issue Date: SEPT. 2016

SHAFER, KLINE & WARREN
11250 Corporate Avenue
Lenexa, KS 66219-1392
913.888.7800 FAX: 913.888.7868
SURVEYING | ENGINEERING | CONSTRUCTION

CLEAR CREEK PARKWAY
CITY OF SHAWNEE, KANSAS

PAVEMENT MARKING & SIGNING PLAN (6)
STA. 55+20.00 TO STA. 65+25.00

150561-010

SHEET NO.
102 OF 182

LAYOUT: MODEL | BY: jadams | DATE: 20-SEP-2016 10:30:53 AM
L:\150561-010_Cad\Civil\Pavement Marking Signing\150561-010_PMMK-06.dgn

NOT FOR CONSTRUCTION

TYPICAL PAVEMENT MARKING DETAILS

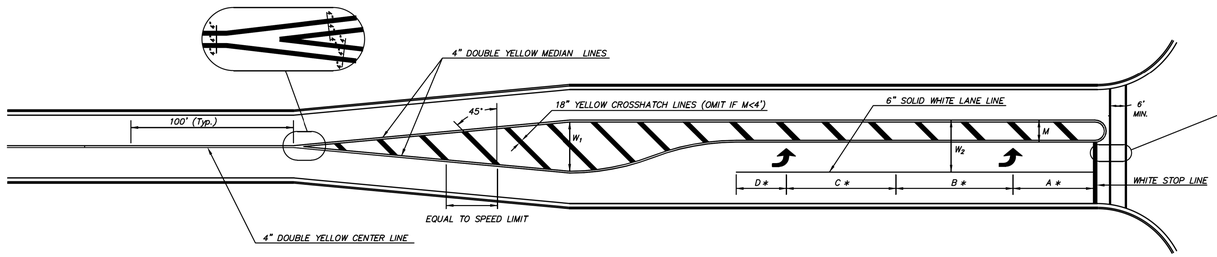

TYPICAL STRIPED LEFT TURN MEDIAN MARKINGS

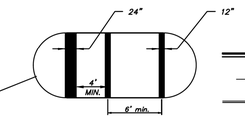

TYPICAL DETAIL OF STOP LINE AND CROSSWALK SEPARATION

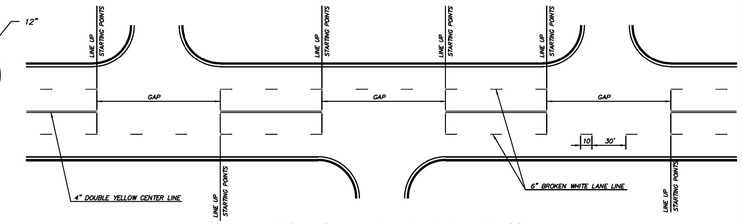

TYPICAL FOUR-LANE UNDIVIDED MARKINGS WITH SIDE STREET INTERSECTIONS

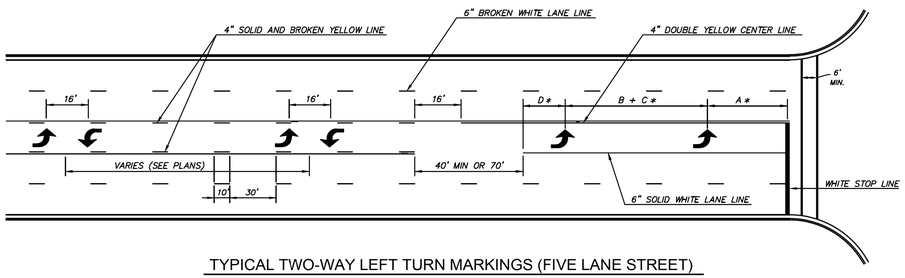

TYPICAL TWO-WAY LEFT TURN MARKINGS (FIVE LANE STREET)

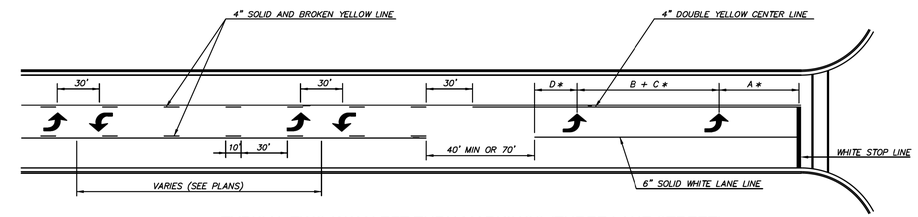

TYPICAL TWO-WAY LEFT TURN MARKINGS (THREE LANE STREET)

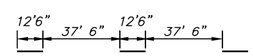

BROKEN LINE SPACING FOR SPEED > 45 MPH

NOTES:

1) * VARIABLE, SEE SCHEDULE AND/OR PLAN VIEWS FOR LOCATION.
2) ≠ DO NOT INSTALL IF TURN LANE EXCEPT FOR TRAP LANE

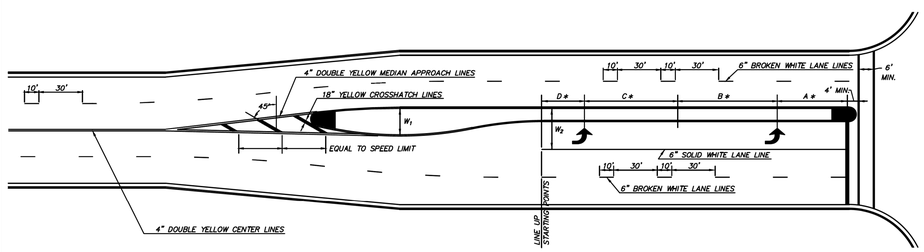

FOR MEDIAN WIDTH, $W_1 \geq 6'$

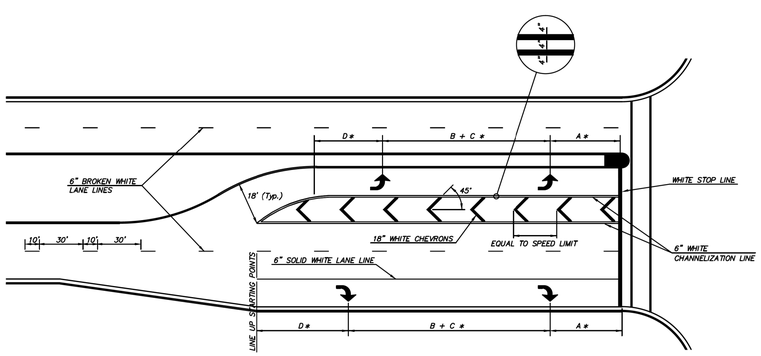

TYPICAL STRIPED OUT LEFT TURN CHANNELIZATION LANE MARKINGS

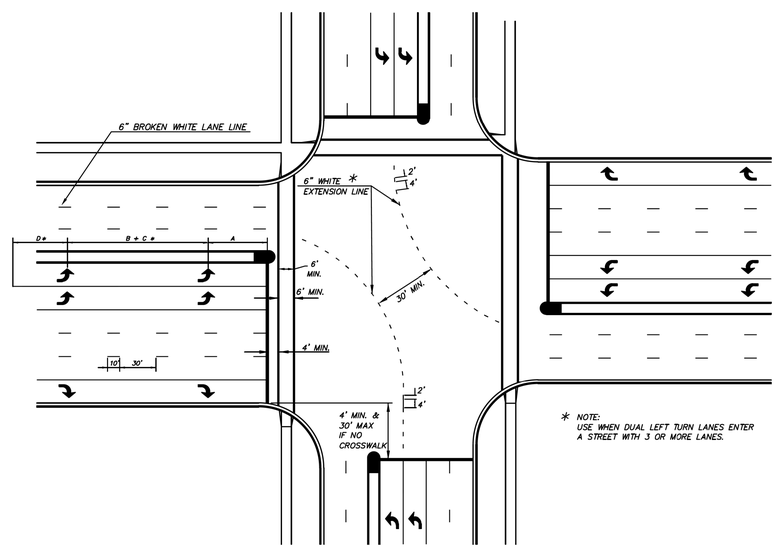

* NOTE: USE WHEN DUAL LEFT TURN LANES ENTER A STREET WITH 3 OR MORE LANES.

TYPICAL CROSSWALK AND LEFT TURN EXTENSION LINE MARKINGS

PAVEMENT MARKING NOTES:

1) ALL PAVEMENT MARKINGS SHALL BE IN ACCORDANCE WITH THE LATEST EDITION OF THE MANUAL ON UNIFORM TRAFFIC CONTROL DEVICES (M.U.T.C.D.).
2) ALL TURN ARROWS AND LEGENDS SHALL BE CENTERED IN THEIR REPECTIVE TRAFFIC LANES.
3) ALL WORDS AND SYMBOLS SHALL CONFORM TO THE LATEST EDITION OF "STANDARD ALPHABETS FOR HIGHWAY SIGNS AND PAVEMENT MARKINGS" PRINTED BY THE U.S. DEPARTMENT OF TRANSPORTATION, FEDERAL HIGHWAY ADMINISTRATION.
4) ~~ON ASPHALT PAVEMENT, ALL LONGITUDINAL AND DIAGONAL LINES, AND ALL LEGENDS, SYMBOLS AND TRANSVERSE LINES SHALL BE PREFORMED THERMOPLASTIC. IF THERMOPLASTIC IS APPROVED AS AN OPTION, IT SHALL BE HOT APPLIED.~~
5) ~~ON CONCRETE PAVEMENT, ALL MARKINGS SHALL BE EPOXY, OR PREFORMED THERMOPLASTIC WITH A BINDER, AND GROOVED INTO THE PAVEMENT. (SEE SPECIFICATIONS)~~
6) PAVEMENT MARKINGS, EITHER TEMPORARY OR PERMANENT, ARE REQUIRED AT ALL TIMES IF THE ROADWAY IS OPEN TO TRAFFIC. (SEE SPECIFICATIONS)
7) ALL MARKINGS THAT CONFLICT WITH THE DESIRED MARKINGS SHALL BE COMPLETELY REMOVED. (SEE SPECIFICATIONS)
8) THE PROPOSED PERMANENT MARKINGS SHALL BE LAID OUT BY THE CONTRACTOR IN ADVANCE OF THE MARKING INSTALLATION. MARKINGS SHALL NOT BE APPLIED UNTIL THE LAYOUT AND CONDITIONS OF THE SURFACE HAVE BEEN APPROVED BY THE CITY INSPECTOR.

Date	Revision	By	Appr.
3-1-14	SHAWNEE DESIGN & CONSTRUCTION MANUAL REVISIONS	MRS	PJL
8-21-12	REVISED TO MATCH CONSTRUCTION SPECIFICATION REVISIONS	MRS	PJL

PAVEMENT MARKING DETAILS

DEVELOPMENT SERVICES

SHAWNEE KANSAS

DATE:	08-27-2007	3520
DRAWN BY:	MRS	
CHECKED BY:	PJL	SHEET 1 OF 3

REV.	DATE	REVISIONS	BY	APP'D
1				
2				
3				
4				
5				

COPYRIGHT © -2016-SHAFER, KLINE & WARREN INC.

Designed By: PRP
Drawn By: JCK/JAA
Checked By: HDL
Issue Date: SEPT. 2016

SHAFER, KLINE & WARREN
11250 Corporate Avenue
Lenexa, KS 66219-1392
913.888.7800 FAX: 913.888.7868
SURVEYING | ENGINEERING | CONSTRUCTION

CLEAR CREEK PARKWAY
CITY OF SHAWNEE, KANSAS

PAVEMENT MARKING DETAILS (1)

150561-010

SHEET NO.
104 OF 182

LAYOUT: MODEL | BY: jadams | DATE: 20-SEP-2016 10:30:55 AM
L:\150561-010_Cad\Civil\Pavement Marking Signing\150561-010_PMK-DET-01.dgn

NOT FOR CONSTRUCTION

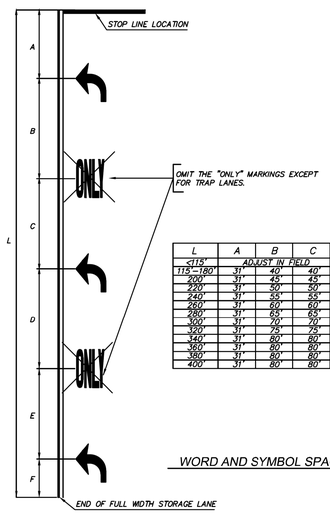

L	A	B	C	D	E	F
<115'	ADJUST IN FIELD					VARIES
115–180'	31'	40'	40'			VARIES
200'	31'	45'	45'			79'
220'	31'	50'	50'			89'
240'	31'	55'	55'			99'
260'	31'	60'	60'			109'
280'	31'	65'	65'			119'
300'	31'	70'	70'			129'
320'	31'	75'	75'			139'
340'	31'	80'	80'			149'
360'	31'	80'	80'	80'	80'	31'
380'	31'	80'	80'	80'	80'	29'
400'	31'	80'	80'	80'	80'	49'

WORD AND SYMBOL SPACING SCHEDULE

PAVEMENT MARKING NOTES:

1) ALL PAVEMENT MARKINGS SHALL BE IN ACCORDANCE WITH THE LATEST EDITION OF THE MANUAL ON UNIFORM TRAFFIC CONTROL DEVICES (M.U.T.C.D.).

2) ALL TURN ARROWS AND LEGENDS SHALL BE CENTERED IN THEIR REPECTIVE TRAFFIC LANES.

3) ALL WORDS AND SYMBOLS SHALL CONFORM TO THE LATEST EDITION OF "STANDARD ALPHABETS FOR HIGHWAY SIGNS AND PAVEMENT MARKINGS" PRINTED BY THE U.S. DEPARTMENT OF TRANSPORTATION, FEDERAL HIGHWAY ADMINISTRATION.

~~4) ON ASPHALT PAVEMENT, ALL LONGITUDINAL AND DIAGONAL LINES, AND ALL LEGENDS, SYMBOLS AND TRANSVERSE LINES SHALL BE PREFORMED THERMOPLASTIC. IF THERMOPLASTIC IS APPROVED AS AN OPTION, IT SHALL BE HOT APPLIED.~~

~~5) ON CONCRETE PAVEMENT, ALL MARKINGS SHALL BE EPOXY, OR PREFORMED THERMOPLASTIC WITH A BINDER, AND GROOVED INTO THE PAVEMENT. (SEE SPECIFICATIONS)~~

6) PAVEMENT MARKINGS, EITHER TEMPORARY OR PERMANENT, ARE REQUIRED AT ALL TIMES IF THE ROADWAY IS OPEN TO TRAFFIC. (SEE SPECIFICATIONS)

7) ALL MARKINGS THAT CONFLICT WITH THE DESIRED MARKINGS SHALL BE COMPLETELY REMOVED. (SEE SPECIFICATIONS)

8) THE PROPOSED PERMANENT MARKINGS SHALL BE LAID OUT BY THE CONTRACTOR IN ADVANCE OF THE MARKING INSTALLATION. MARKINGS SHALL NOT BE APPLIED UNTIL THE LAYOUT AND CONDITIONS OF THE SURFACE HAVE BEEN APPROVED BY THE CITY INSPECTOR.

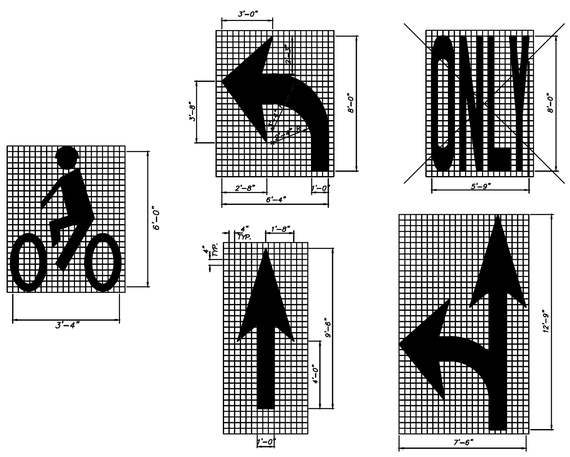

WORD AND SYMBOL DETAILS

NOTES:
1) WORD & SYMBOL MARKINGS SHALL BE WHITE.
2) RIGHT TURN AND COMBINATION RIGHT TURN/STRAIGHT ARROWS ARE REVERSE OF ARROWS SHOWN.
3) BIKE LANE SYMBOL TO FACE STREET SIDE NOT CURB SIDE.

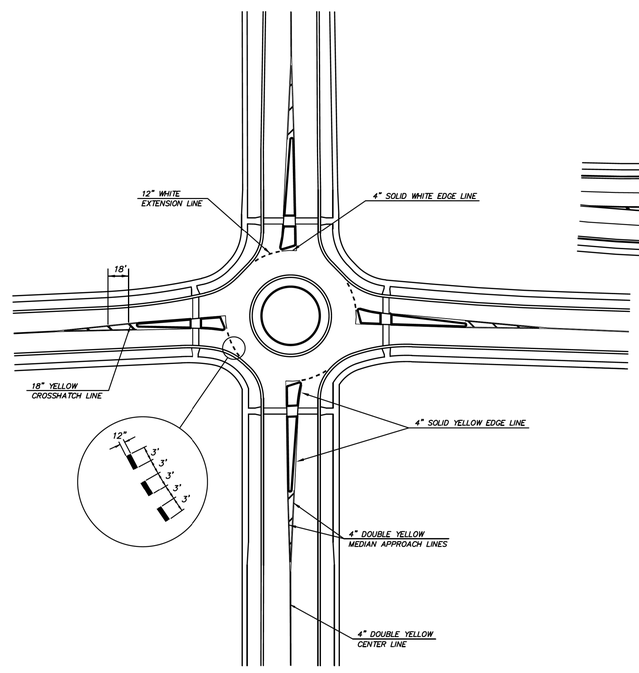

TYPICAL ONE-LANE ROUNDABOUT MARKING DETAILS

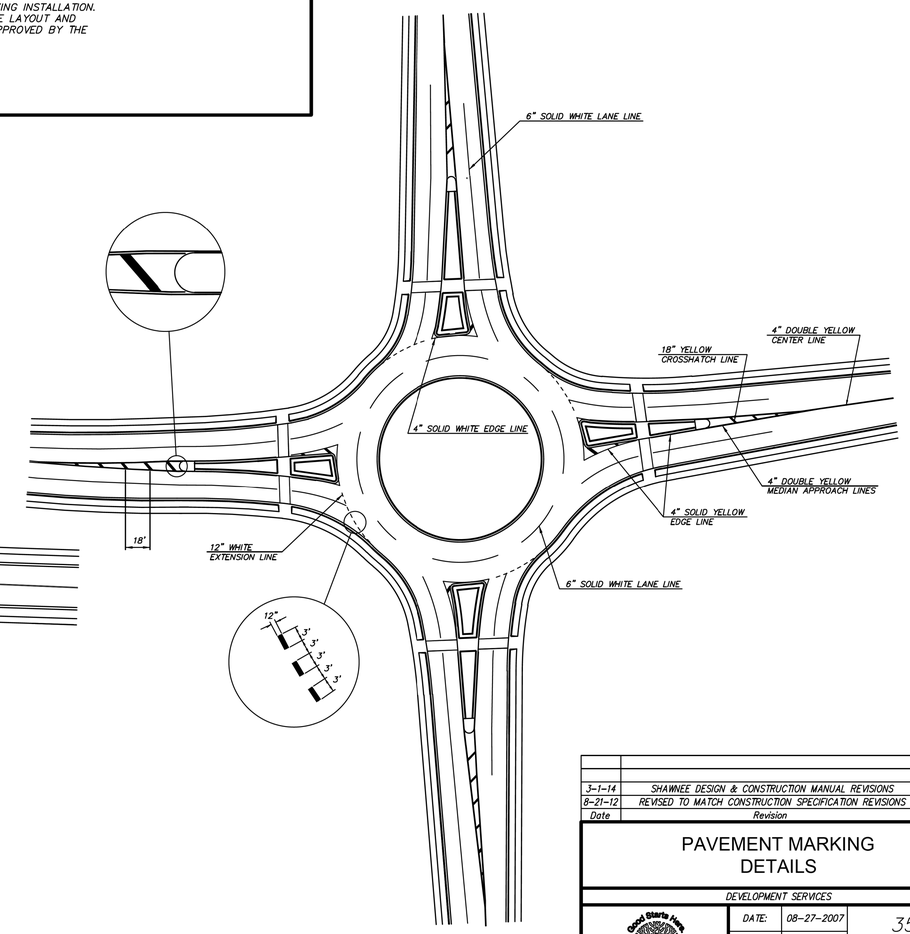

TYPICAL TWO-LANE ROUNDABOUT MARKING DETAILS

Date	Revision	By	Appr.
3-1-14	SHAWNEE DESIGN & CONSTRUCTION MANUAL REVISIONS	MRS	PJL
8-21-12	REVISED TO MATCH CONSTRUCTION SPECIFICATION REVISIONS	MRS	PJL

PAVEMENT MARKING DETAILS

DEVELOPMENT SERVICES

Good Starts Here SHAWNEE KANSAS

DATE:	08-27-2007	3521
DRAWN BY:	MRS	
CHECKED BY:	PJL	SHEET 2 OF 3

REV.	DATE	REVISIONS	BY	APP'D
1				
2				
3				
4				
5				

Designed By: PRP
Drawn By: JCK/JAA
Checked By: HDL
Issue Date: SEPT. 2016

COPYRIGHT © -2016-SHAFER, KLINE & WARREN INC.

SHAFER, KLINE & WARREN
11250 Corporate Avenue
Lenexa, KS 66219-1392
913.888.7800 FAX: 913.888.7868
SURVEYING | ENGINEERING | CONSTRUCTION

CLEAR CREEK PARKWAY
CITY OF SHAWNEE, KANSAS

PAVEMENT MARKING DETAILS (2)

150561-010

LAYOUT: MODEL | BY: jadams | DATE: 20-SEP-2016 10:31:27 AM
L:\150561-010_Cad\Civil\Pavement Marking Signing\150561-010_PMMK-DET-02.dgn

NOT FOR CONSTRUCTION

PAVEMENT MARKING SUMMARY - (PRE FORMED THERMOPLASTIC) for use on concrete or asphalt pavements

STATION TO STATION		LOCATION		6" SOLID WHITE LANE LINES	6" BROKEN WHITE LANE LINES	4" SOLID WHITE EDGE LINE	4" SOLID YELLOW EDGE LINE	4" SOLID & BROKEN YELLOW LINE	4" DOUBLE YELLOW CENTERLINE	24" WHITE CROSSWALK LINES	6" WHITE LANE EXTENSION LINE	24" WHITE STOP LINE	18" YELLOW CROSSHATCH LINES	12" WHITE LANE EXTENSION LINE	18" WHITE CHEVRON LINES		WHITE TURN ARROWS		WHITE THRU TRAFFIC ARROWS	WHITE THRU TRAFFIC & RT./LT. TURN ARROWS		WHITE "ONLY" MARKINGS
																	RT.	LT.		THRU/RT	THRU/LT	

PAVEMENT MARKING SUMMARY - (EPOXY) for use on concrete or asphalt pavements

STATION TO STATION		LOCATION		6" SOLID WHITE LANE LINES	6" BROKEN WHITE LANE LINES	4" SOLID WHITE EDGE LINE	4" SOLID YELLOW EDGE LINE	4" SOLID & BROKEN YELLOW LINE	4" DOUBLE YELLOW CENTERLINE	24" WHITE CROSSWALK LINES	6" WHITE LANE EXTENSION LINE	24" WHITE STOP LINE	18" YELLOW CROSSHATCH LINES	12" WHITE LANE EXTENSION LINE	18" WHITE CHEVRON LINES		WHITE TURN ARROWS		WHITE THRU TRAFFIC ARROWS	WHITE THRU TRAFFIC & RT./LT. TURN ARROWS		WHITE "ONLY" MARKINGS
																	RT.	LT.		THRU/RT	THRU/LT	

PAVEMENT MARKING SUMMARY - (THERMOPLASTIC) for use on asphalt pavements

STATION TO STATION		LOCATION		6" SOLID WHITE LANE LINES	6" BROKEN WHITE LANE LINES	4" SOLID WHITE EDGE LINE	4" SOLID YELLOW EDGE LINE	4" SOLID & BROKEN YELLOW LINE	4" DOUBLE YELLOW CENTERLINE	24" WHITE CROSSWALK LINES	6" WHITE LANE EXTENSION LINE	24" WHITE STOP LINE	18" YELLOW CROSSHATCH LINES	12" WHITE LANE EXTENSION LINE	18" WHITE CHEVRON LINES		WHITE TURN ARROWS		WHITE THRU TRAFFIC ARROWS	WHITE THRU TRAFFIC & RT./LT. TURN ARROWS		WHITE "ONLY" MARKINGS
																	RT.	LT.		THRU/RT	THRU/LT	

PAVEMENT MARKING SUMMARY - (KANSAS HIGH BUILD PAINT-Rehn and Hass HD-21 acrylic resin) if approved

STATION TO STATION		LOCATION		6" SOLID WHITE LANE LINES	6" BROKEN WHITE LANE LINES	4" SOLID WHITE EDGE LINE	4" SOLID YELLOW EDGE LINE	4" SOLID & BROKEN YELLOW LINE	4" DOUBLE YELLOW CENTERLINE	24" WHITE CROSSWALK LINES	6" WHITE LANE EXTENSION LINE	24" WHITE STOP LINE	18" YELLOW CROSSHATCH LINES	12" WHITE LANE EXTENSION LINE	18" WHITE CHEVRON LINES		WHITE TURN ARROWS		WHITE THRU TRAFFIC ARROWS	WHITE THRU TRAFFIC & RT./LT. TURN ARROWS		WHITE "ONLY" MARKINGS
																	RT.	LT.		THRU/RT	THRU/LT	

NOTE:
DELETE TABLES THAT ARE NOT APPLICABLE TO SPECIFIC PROJECT

NOTES:
1) THESE APPROXIMATE QUANTITIES WERE PREPARED SOLELY FOR THE CONTRACTORS CONVENIENCE AS A MEANS OF SETTING FORTH MAJOR ITEMS AND IS NOT GUARANTEED TO BE A COMPLETE NOR ACCURATE LIST OF ALL ITEMS NECESSARY TO COMPLETE THIS WORK. OTHER ITEMS REQUIRED FOR A COMPLETE INSTALLATION, AS SHOWN OR DESCRIBED SHALL BE INCLUDED IN THE PRICES AS BID.

PAVEMENT MARKING NOTES:

1) ALL PAVEMENT MARKINGS SHALL BE IN ACCORDANCE WITH THE LATEST EDITION OF THE MANUAL ON UNIFORM TRAFFIC CONTROL DEVICES (M.U.T.C.D.).
2) ALL TURN ARROWS AND LEGENDS SHALL BE CENTERED IN THEIR REPECTIVE TRAFFIC LANES.
3) ALL WORDS AND SYMBOLS SHALL CONFORM TO THE LATEST EDITION OF "STANDARD ALPHABETS FOR HIGHWAY SIGNS AND PAVEMENT MARKINGS" PRINTED BY THE U.S. DEPARTMENT OF TRANSPORTATION, FEDERAL HIGHWAY ADMINISTRATION.
4) ON ASPHALT PAVEMENT, ALL LONGITUDINAL AND DIAGONAL LINES, AND ALL LEGENDS, SYMBOLS AND TRANSVERSE LINES SHALL BE THERMOPLASTIC. (SEE SPECIFICATIONS)
5) ON CONCRETE PAVEMENT, ALL MARKINGS SHALL BE EPOXY OR PREFORMED THERMOPLASTIC GROOVED INTO PAVEMENT. (SEE SPECIFICATIONS)
6) PAVEMENT MARKINGS, EITHER TEMPORARY OR PERMANENT, ARE REQUIRED AT ALL TIMES IF THE ROADWAY IS OPEN TO TRAFFIC. (SEE SPECIFICATIONS)
7) ALL MARKINGS THAT CONFLICT WITH THE DESIRED MARKINGS SHALL BE COMPLETELY REMOVED. (SEE SPECIFICATIONS)

Date	Revision	By	Appr.
3-1-14	SHAWNEE DESIGN & CONSTRUCTION MANUAL REVISIONS	MRS	PJL
8-21-12	REVISED TO MATCH CONSTRUCTION SPECIFICATION REVISIONS	MRS	PJL

PAVEMENT MARKING QUANTITIES

DEVELOPMENT SERVICES

Good Starts Here SHAWNEE KANSAS

DATE:	08-27-2007	3522
DRAWN BY:	MRS	
CHECKED BY:	PJL	SHEET 3 OF 3

REV.	DATE	REVISIONS	BY	APP'D
1				
2				
3				
4				
5				

Designed By: PRP
Drawn By: JCK/JAA
Checked By: HDL
Issue Date: SEPT. 2016

COPYRIGHT © -2016-SHAFER, KLINE & WARREN INC.

SHAFER, KLINE & WARREN
11250 Corporate Avenue
Lenexa, KS 66219-1392
913.888.7800 FAX: 913.888.7868
SURVEYING | ENGINEERING | CONSTRUCTION

CLEAR CREEK PARKWAY
CITY OF SHAWNEE, KANSAS

PAVEMENT MARKING SUMMARY OF QUANTITIES

150561-010

LAYOUT: MODEL | BY: jadams | DATE: 20-SEP-2016 10:31:51 AM
L:\150561-010_Cad\Civil\Pavement Marking Signing\150561-010_PMRK-QUANT-01.dgn

NOT FOR CONSTRUCTION

PAVEMENT INSTALLATION SEQUENCE

1. SIGN POST ANCHOR DRIVEN PARTIALLY INTO SUBGRADE USING A DRIVE CAP WITH SLEDGE OR POWER EQUIPMENT PRIOR TO THE PLACEMENT OF THE PAVEMENT.
2. ANCHOR SLEEVE SLIPPED OVER ANCHOR AND DRIVEN INTO SUBGRADE TOGETHER WITH THE SIGN POST ANCHOR PRIOR TO THE PLACEMENT OF THE PAVEMENT.
3. INSERT SIGN POST INTO THE POST ANCHOR AND BOLT IN PLACE.

GROUND INSTALLATION SEQUENCE

1. SIGN POST ANCHOR DRIVEN PARTIALLY INTO THE GROUND USING A DRIVE CAP WITH SLEDGE OR POWER EQUIPMENT.
2. ANCHOR SLEEVE SLIPPED OVER ANCHOR AND DRIVEN INTO THE GROUND TOGETHER WITH THE SIGN POST ANCHOR.
3. INSERT SIGN POST INTO THE POST ANCHOR AND BOLT IN PLACE.

NOTE: IN ALL INSTALLATIONS THE FIRST HOLE ABOVE THE FINISHED GRADE LEVEL IN ALL THREE UNITS MUST BE IN LINE FOR INSERTION OF THE CORNER BOLT.

ALL CORNER BOLTS AND NUTS FOR FASTENING THE SIGNS AND SIGN POST ASSEMBLY AND ALL WASHERS SHALL COMPLY WITH APPROPRIATE SECTIONS OF THE STANDARD SPECIFICATIONS (LATEST EDITION) AND SHALL BE A SUBSIDIARY ITEM.

NOTE: ALL SPEED CONTROL SIGNS, ROUTE MARKERS & STREET NAME SIGNS WITHIN THE LIMITS OF CONSTRUCTION SHALL BE REMOVED PRIOR TO CONSTRUCTION AND REPLACED IN APPROXIMATELY THE SAME LOCATION, AS DIRECTED BY THE ENGINEER WHEN CONSTRUCTION IS COMPLETED, AS SUBSIDIARY ITEMS UNLESS OTHERWISE INDICATED IN THE PLANS OR GENERAL NOTES.

ALL LETTER, NUMBER & SYMBOL SIZES, SPACING & COLORS AND THE SIGN COLORS SHALL CONFORM TO THE CURRENT "MANUAL ON UNIFORM TRAFFIC CONTROL DEVICES."

ALL SIGN MATERIAL TO BE 0.08" THICK ALUMINUM WITH HIGH INTENSITY SHEETING UNLESS OTHERWISE SPECIFIED. (SEE SPECS.)

MATERIAL REQUIREMENTS

SIGN POSTS, POST ANCHORS, AND POST ANCHOR SLEEVES:
THE SIGN POSTS, POST ANCHORS, AND POST ANCHOR SLEEVES SHALL BE GALVANIZED FINISH HOT ROLLED CARBON STEEL ASTM A-446 GRADE A WITH A GALVANIZING CONFORMING TO ASTM A-525, DESIGNATION G-90.

THE SIGN POST SHALL HAVE 7/16" DIA. HOLES AT 1" CENTERS ON ALL FOUR SIDES FOR TOTAL LENGTH OF POST.

THE POST ANCHOR AND POST ANCHOR SLEEVE SHALL BE FURNISHED WITH THE BOLT HOLES ON ALL FOUR SIDES ALONG THE ENTIRE LENGTH.

ALL HOLES SHALL BE DRILLED OR PUNCHED AND ALL WELDS, CUTS, BURRS, AND SHARP EDGES ARE TO BE SMOOTHED OFF BEFORE APPLICATION OF FINISH.

FASTENING ACCESSORIES:
THE BOLTS, NUTS, AND WASHERS SHALL COMPLY WITH SUBSECTION 1614b AND 1614e OF THE KANSAS DEPARTMENT OF TRANSPORTATION STANDARD SPECIFICATIONS FOR STATE ROAD AND BRIDGE CONSTRUCTION (1990 EDITION)

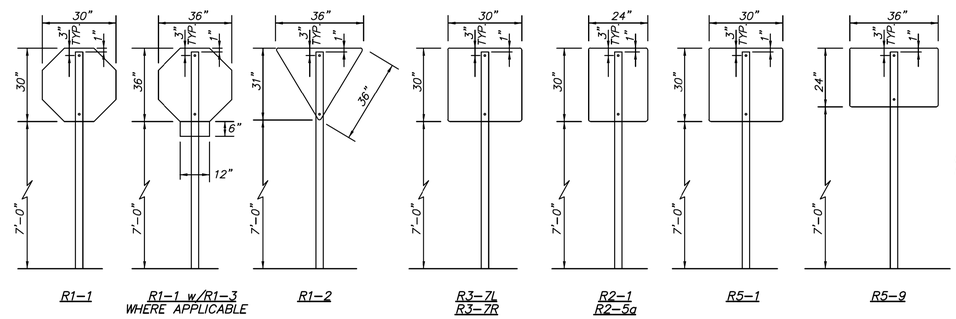

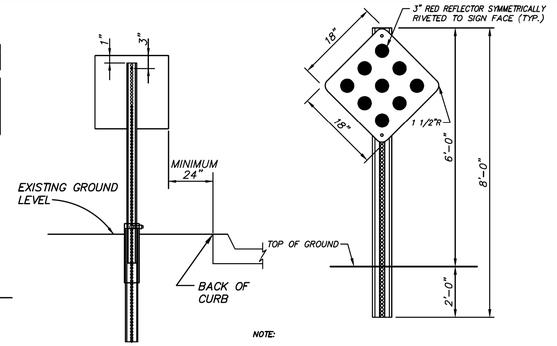

TRAFFIC SIGN
INSTALLATION DETAIL

NOTE:
1. SIGN SHALL BE 0.080 GAUGE ALUMINUM COVERED WITH 3-M RED ENGINEERING GRADE RED DIAMOND REFLECTIVE SHEETING OR EQUIVALENT.
2. POST SHALL BE 1 3/4" SQUARE 14 GAUGE BREAKAWAY POST.
3. POSTS SHALL BE SPACED EVENLY AT A MAXIMUM OF 6' APART AND CENTERED PERPENDICULAR TO THE ROADWAY.
4. HARDWARE SHALL BE ZINC PLATED COMMON GRADE. HEX BOLT 5/16"x 2 1/2"+.2", FLAT WASHER, NYLON WASHER, LOCK WASHER, AND NUT TO BE COMPATIBLE WITH THE HEX BOL.
5. ALL LETTER, NUMBER AND SYMBOL SIZES, SPACING, COLORS, AND THE SIGN COLORS SHALL CONFORM TO THE CURRENT "MANUAL ON UNIFORM TRAFFIC CONTROL DEVICES."

END OF ROAD MARKER

STREET NAME SIGN DETAIL
ALUMINUM EXTRUDED BLADE

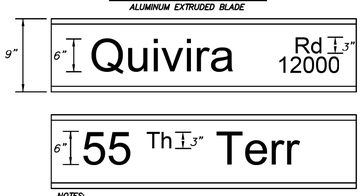

NOTES:
1) FONT TO BE HIGHWAY GOTHIC SERIES C (LEAD CAPITAL LETTER)
2) ON NAMED STREETS ALL STREET CLASSIFACTION SHALL BE 3" EVEN ACROSS THE TOP WHEN HUNDRED BLOCKS ARE USED WITH STREET CLASSIFACTION CENTER WITH 1/4" GAP BETWEEN
3) HUNDRED BLOCKS ARE ONLY TO BE USED WHEN NOTED BY TRAFFIC ENGINEER

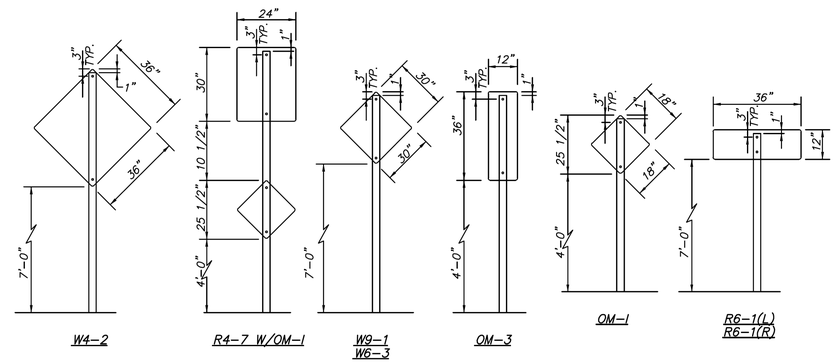

SIGN MOUNTING DETAILS

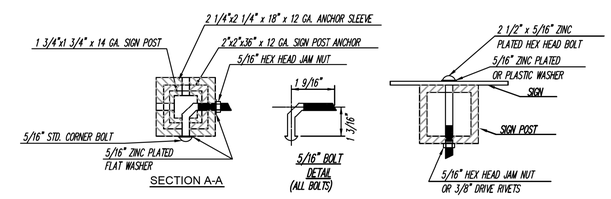

SUMMARY OF QUANTITIES

ITEMS	TOTALS	UNITS

SIGN DESCRIPTIONS					TRAFFIC CONTROL SIGNS & SIGN POSTS																						
CLASSIFICATION	TYPE	PROCESS	SIZE	AREA	STA.	LOCATION FROM ℄	CLASSIFACATION – EACH																		SIGN POST LENGTH		

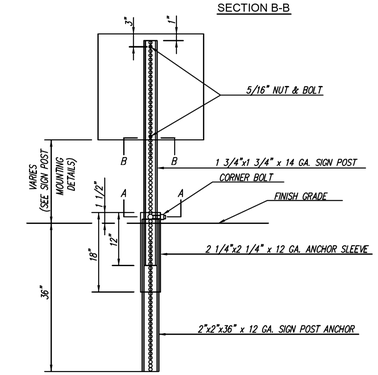

BREAK-AWAY SIGN POST DETAIL *

* FOR SPEED LIMITS GREATER THAN 45 MPH ADD 1/4" TO POST, SLEEVE, AND ANCHOR DIMENSIONS

Date	Revision	By	Appr
3-1-14	SHAWNEE DESIGN & CONSTRUCTION MANUAL REVISIONS	MRS	PJL
8-21-12	REVISED TO MATCH CONSTRUCTION SPECIFICATION REVISIONS	MRS	PJL

SIGN DETAILS

DEVELOPMENT SERVICES

Good Starts Here SHAWNEE KANSAS

DATE:	08-27-2007	3525
DRAWN BY:	MRS	
CHECKED BY:	PJL	SHEET 1 OF 1

REV.	DATE	REVISIONS	BY	APP'D
5				
4				
3				
2				
1				

Designed By: PRP
Drawn By: JCK/JAA
Checked By: HDL
Issue Date: SEPT. 2016

COPYRIGHT © -2016-SHAFER, KLINE & WARREN INC.

SHAFER, KLINE & WARREN
11250 Corporate Avenue
Lenexa, KS 66219-1392
913.888.7800 FAX: 913.888.7868
SURVEYING | ENGINEERING | CONSTRUCTION

CLEAR CREEK PARKWAY
CITY OF SHAWNEE, KANSAS

SIGNING SUMMARY OF QUANTITIES

150561-010

LAYOUT: MODEL | BY: jadams | DATE: 20-SEP-2016 10:32:10 AM
L:\150561-010_Cad\Civil\Pavement Marking Signing\150561-010_SIGN-QUANT-01.dgn

NOT FOR CONSTRUCTION

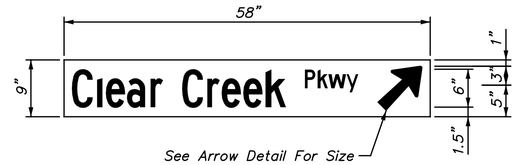

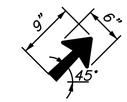

Arrow Detail

Character	C	l	e	a	r		C	r	e	e	k		P	k	w	y		
Left Space		0.324	0.216	0.144	0.324			0.324	0.216	0.216	0.324			0.162	0.036	0.036		
Width	3.362	0.84	3.061	2.882	1.982	3.000	3.362	1.982	3.061	3.061	3.242	3.000	1.681	1.621	2.822	1.861	3.000	7.163
Right Space	0.324	0.324	0.144	0.288			0.324	0.072	0.144	0.144			0.162	0.036	0.036			

D3-1; No Border, White on Green
[Clear Creek] 6" Caps; [Pkwy] 3" Caps
[Clear Creek] C 60% Spacing; [Pkwy] C

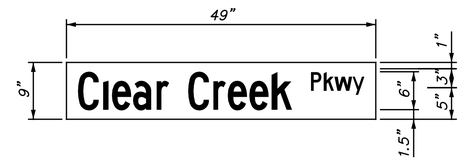

Character	C	l	e	a	r		C	r	e	e	k		P	k	w	y
Left Space		0.324	0.216	0.144	0.324			0.324	0.216	0.216	0.324			0.162	0.036	0.036
Width	3.362	0.84	3.061	2.882	1.982	3.000	3.362	1.982	3.061	3.061	3.242	3.000	1.681	1.621	2.822	1.861
Right Space	0.324	0.324	0.144	0.288			0.324	0.072	0.144	0.144			0.162	0.036	0.036	

D3-1; No Border, White on Green
[Clear Creek] 6" Caps; [Pkwy] 3" Caps
[Clear Creek] C 60% Spacing; [Pkwy] C

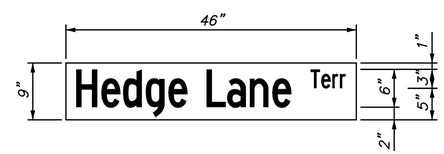

Character	H	e	d	g	e		L	a	n	e		T	e	r	r
Left Space		0.216	0.216	0.216	0.216			0.144	0.324	0.216			0.108	0.162	0.162
Width	3.362	3.061	3.061	3.061	3.061	3.000	3.061	2.882	3.061	3.061	3.000	1.531	1.531	0.991	0.991
Right Space	0.396	0.144	0.324	0.324			0.108	0.288	0.288			0.054	0.072	0.036	

D3-1; No Border, White on Green
[Hedge Lane] 6" Caps; [Terr] 3" Caps
[Hedge Lane] C 60% Spacing; [Terr] C

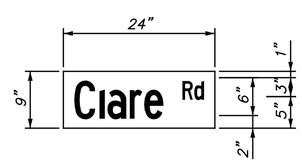

Character	C	l	a	r	e		R	d
Left Space		0.324	0.144	0.324	0.216			0.108
Width	3.362	0.84	2.882	1.982	3.061	3.000	1.681	1.531
Right Space	0.324	0.324	0.288	0.072			0.108	

D3-1; No Border, White on Green
Text Height is 6" for Capitals and 4.5" For Lower Case
[Clare] C 60% Spacing; [Rd] C

REV.	DATE	REVISIONS	BY	APP'D
1				
2				
3				
4				
5				

COPYRIGHT © -2016-SHAFER, KLINE & WARREN INC.

Designed By: PRP
Drawn By: JCK/JAA
Checked By: HDL
Issue Date: SEPT. 2016

SHAFER, KLINE & WARREN
11250 Corporate Avenue
Lenexa, KS 66219-1392
913.888.7800 FAX: 913.888.7868
SURVEYING | ENGINEERING | CONSTRUCTION

CLEAR CREEK PARKWAY
CITY OF SHAWNEE, KANSAS

SIGNING DETAILS

150561-010

LAYOUT: MODEL | BY: jadams | DATE: 20-SEP-2016 10:32:33 AM
L:\150561-010_Cad\Civil\Pavement Marking Signing\150561-010_SIGN-DET-02.dgn

NOT FOR CONSTRUCTION

CONSTRUCTION SEQUENCE NOTES

General Construction Sequence Notes – Applies to All Phases as Appropriate

1. The Contractor may submit an alternate construction sequence to be reviewed and approved by the Engineer prior to construction.
2. Place sidewalk and traffic control signs and devices appropriate for the work phase and leave in place until the work phase is complete.
3. Cover existing signs in conflict with the traffic control plan for the work phase.
4. Install temporary erosion control as indicated on the plans for the work phase.
5. Perform clearing & grubbing only as necessary for the work phase.
6. Perform the demolition and construction required for the work phase.
7. Perform construction testing as required by the project's specifications and special provisions appropriate for the work phase.
8. Inspect completed work for acceptance by the City, and repair or replace any deficiencies prior to completing this phase of work.
9. During non–working hours the traffic control channelizers shall be pulled back to the edge of the traveled way, and non–applicable signs shall be covered or removed.
10. When the work phase is complete, leave temporary erosion control measures in place until all permanent erosion control measures are in place, established and accepted by the City, or until the remainder of the project's construction.
11. When the work phase is complete, remove sidewalk and traffic control signs and devices for the work phase and uncover existing signs covered during the work phase.

Phase 1 – Grading and Drainage at Existing Ponds
(Note: This phase must be started first and completed by March 15, 2017.)

1–1 Install construction entrance at Clare Road.
1–2 Drain existing ponds and perform any dewatering required for the work phase.
1–3 Construct the demolition, and placement of grading, pond dams and appurtenances, outlet structures, storm drainage system and permanent erosion control measures as indicated on the plans.

Phase 2 – Grading and Drainage at Golf Cart Underpass
(Note: This phase must be started first, performed concurrently with Phase 1 and completed by March 15, 2017.)

2–1 Construct golf cart path temporary pavement around the work area. (Note: the path shall never be blocked from use.)
2–2 Construct the demolition and placement of grading, golf cart underpass (RCB), storm drainage system, permanent erosion control measures, relocated golf cart path and portions of the retaining walls necessary to ensure the golf cart path and underpass are open to traffic as indicated on the plans.
2–3 Demolish golf cart path temporary pavement, grade the disturbed area to properly drain and seed the disturbed area.

Phase 3 – Grading and Drainage at Clear Creek Parkway

3–1 Construct the demolition, and placement of grading, storm drainage systems, remaining retaining walls and permanent erosion control measures as indicated on the plans.

Phase 4 – Pavement, Walks, Trails and Cart Paths at Clear Creek Parkway
(Note: Prior to placing any pavement, walks, trails or cart paths, the Contractor shall perform a video camera inspection of all storm structures and pipes to ensure that structure joints are filled solid with grout, pipes are true to grade and have not settled, grades are correct and smooth, and all sediment and debris from construction has been flushed from the storm drainage system. A copy of the video shall be provided to the City for approval and acceptance).

4–1 Construct the placement of subgrade, curb & gutter, base pavement, sidewalks, trails, ADA ramps, and golf cart paths, as indicated on the plans.
4–2 When the work phase is complete, leave traffic control and temporary erosion control measures in place for the remainder of the project's construction.

Phase 5 – Curb Returns at Clare Road

5–1 Construct the demolition and placement of grading, storm drainage system, permanent erosion control measures subgrade, curb & gutter, base pavement, sidewalks, trails, and ADA ramps as indicated on the plans.
5–2 When the work phase is complete, remove sidewalk and traffic control signs and devices for the work phase, uncover existing signs covered during the work phase, and place Type III barricades and signs across the entrance to Clear Creek Parkway as indicated on the plans.

Phase 6 – Landscaping, Seeding and Sodding at Clear Creek Parkway
(Note: This phase shall be performed during normal planting seasons between August 15 and October 1 for fall planting and between February 15 and May 1 for spring planting. This phase may be performed concurrently with Phase 3 or any other phase after, but shall be completed prior to placing pavement in Phase 7.)

6–1 All land areas not covered by building or pavement and receiving landscape plantings shall be brought to final grade prior to placing landscaping.
6–2 Construct the placement of all landscaping, sodding and seeding items and appurtenances as indicated on the plans.

Phase 7 – Surface Pavement, Lighting, and Striping and Signing at Clear Creek Parkway

7–1 Construct the placement of the asphalt surface pavement, street lighting, and pavement marking and signing as indicated on the plans.
7–2 Open Clear Creek Parkway to traffic.

Phase 8 – Crosswalk and NW Curb Return at Hedge Lane Terrace

8–1 Construct the demolition and placement of northwest curb return and concrete crosswalk at Hedge Lane Terrace on one half of the roadway at a time (Phase 8A & 8B) as indicated on the plans.
8–2 Open Hedge Lane Terrace to traffic.

Phase 9 – Final Project Cleanup

9–1 Inspect completed work for acceptance by the City, and repair or replace any remaining deficiencies prior to scheduling a final walk–thru inspection with the Engineer and Inspector.
9–2 When the work phase is complete, leave temporary erosion control measures in place and schedule a final walk–thru inspection with the Engineer and Inspector.
9–3 When all final walk–thru items have been completed and the project has been accepted by the City, the Contractor shall remove all temporary erosion control measures, remove all sidewalk and traffic control signs and devices, and uncover all existing signs covered during the project.

REV.	DATE	REVISIONS	BY	APP'D
1				
2				
3				
4				
5				

Designed By: PRP
Drawn By: JCK/JAA
Checked By: HDL
Issue Date: SEPT. 2016

COPYRIGHT © –2016–SHAFER, KLINE & WARREN INC.

SHAFER, KLINE & WARREN
11250 Corporate Avenue
Lenexa, KS 66219-1392
913.888.7800 FAX: 913.888.7868
SURVEYING | ENGINEERING | CONSTRUCTION

CLEAR CREEK PARKWAY
CITY OF SHAWNEE, KANSAS

CONSTRUCTION SEQUENCE NOTES

150561–010

LAYOUT: MODEL | BY: jadams | DATE: 20–SEP–2016 10:32:39 AM
L:\150561–010_Cad\Civil\Traffic Control\150561–010_TC–SEQ–NOTES–01.dgn

NOT FOR CONSTRUCTION

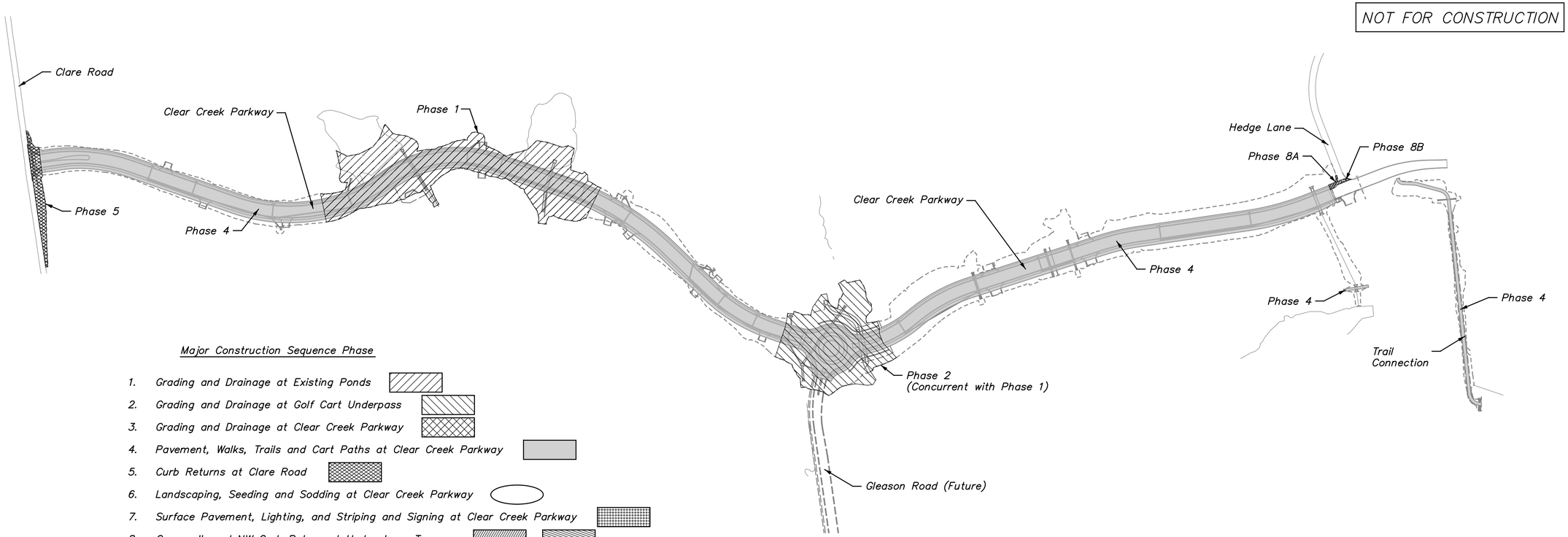

Major Construction Sequence Phase

1. Grading and Drainage at Existing Ponds
2. Grading and Drainage at Golf Cart Underpass
3. Grading and Drainage at Clear Creek Parkway
4. Pavement, Walks, Trails and Cart Paths at Clear Creek Parkway
5. Curb Returns at Clare Road
6. Landscaping, Seeding and Sodding at Clear Creek Parkway
7. Surface Pavement, Lighting, and Striping and Signing at Clear Creek Parkway
8. Crosswalk and NW Curb Return at Hedge Lane Terrace — 8A, 8B
9. Final Project Cleanup

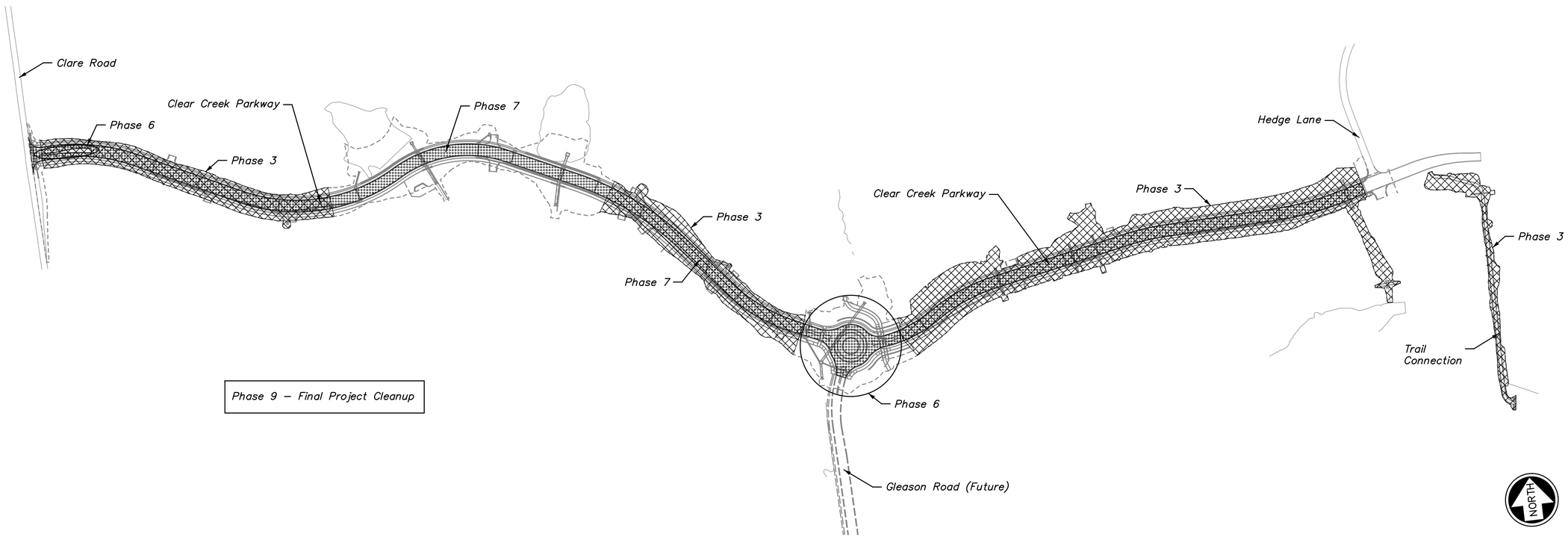

Phase 9 – Final Project Cleanup

Construction Sequence Plan

REV.	DATE	REVISIONS	BY	APP'D
5				
4				
3				
2				
1				

Designed By: PRP
Drawn By: JCK/JAA
Checked By: HDL
Issue Date: SEPT. 2016

COPYRIGHT © -2016-SHAFER, KLINE & WARREN INC.

SHAFER, KLINE & WARREN
11250 Corporate Avenue
Lenexa, KS 66219-1392
913.888.7800 FAX: 913.888.7868
SURVEYING | ENGINEERING | CONSTRUCTION

CLEAR CREEK PARKWAY
CITY OF SHAWNEE, KANSAS

CONSTRUCTION SEQUENCE PLAN

150561-010

LAYOUT: MODEL | BY: jadams | DATE: 20-SEP-2016 10:33:14 AM
L:\150561-010_Cad\Civil\Traffic Control\150561-010_TC-SEQ-PLAN-01.dgn

NOT FOR CONSTRUCTION

GENERAL TRAFFIC CONTROL NOTES

1. The Contractor's construction traffic shall use K-7 Highway, West 55th Street, and Clare Road for access and haul routes. The Contractor shall not use Johnson Drive, Clear Creek Parkway or Hedge Lane Terrace for access or haul routes as they are not designated as truck routes.
2. During non-working hours the traffic control channelizers shall be pulled back to the edge of the traveled way and non-applicable signs shall be covered or removed and any flashing arrow panels shall be turned off.
3. During work hours uncover applicable traffic control signs, turn on any flashing arrow panels and place trimline channelizers to close the appropriate traffic lane as indicated on the plans.
4. The posted speed limit during work hours and non-work hours shall remain at 30 mph for Clear Creek Parkway and Hedge Lane Terrace, and 25 mph for Clare Road.
5. Traffic control shall be performed in accordance with the requirements of the job special provisions, the standard specifications, these plans, the standard drawings, and the publication entitled "Manual on Uniform Traffic Control Devices for Streets and Highways" 2009 edition, published by the Federal Highway Administration. The primary intent is to protect the traveling public and the construction workers from injury.
6. The Contractor shall be responsible for coordinating planned construction activities, especially the traffic control activities, with all public services, including, but not limited to, emergency services (police, ambulance, and fire), school bus services, postal services, and the news media.
7. These plans present traffic control in the simplest form and are an absolute minimum. Additional measures may be required. It is understood that, if situations occur that can reasonably affect the primary intent of the traffic control plans, adjustments shall be made. It is the responsibility of the Contractor to inform the Engineer of such situations in an expeditious manner, so that adjustments may be readily approved.
8. The work shall be performed such that interruption to the existing traffic pattern is held to a minimum. In addition, the work shall be performed such that the response time for emergency access to affected property owners is also held to a minimum.
9. All signs used in this traffic control plan are considered portable. No direct payment will be made for any sign relocations. No direct payment will be made for the relocation of channelizers.
10. The locations shown on these plans are typical and may be adjusted to more accurately reflect field conditions if approved by the Engineer. The Engineer in charge of construction will approve the final location of all traffic control devices.
11. The Contractor shall be responsible for avoiding any and all utilities when setting sign posts and shall coordinate activities with any and all utility companies whether their facility is shown on the plans or not.
12. The Contractor shall be responsible for maintaining, positioning, cleaning and/or replacing all traffic control devices on an around-the-clock basis, whether or not work is actively being performed. The Contractor shall correct any deficiencies noted immediately.
13. Permanent and temporary traffic control devices not in use or not applicable shall be either covered or removed from the work area.
14. Work vehicles and equipment shall be located with adequate clearance from the traveled way so that sight distances are not restricted for drivers or pedestrians.
15. The Contractor shall be responsible for keeping all traffic lanes and sidewalk areas free of mud and other construction debris.
16. The Contractor may submit alternate traffic control plans for review and approval by the Engineer prior to construction.

TRAFFIC CONTROL CALCULATIONS

MUTCD Criteria

Channelizing Devices Spacing should not exceed a distance in feet equal to 1.0 times the speed limit in mph when used for taper channelization, and a distance in feet equal to 2.0 times the speed limit in mph when used for tangent channelization.

Taper Length, L, in Feet = (W x S2)/60 for S ≤ 40 mph
Or L, in Feet = W x S for S ≥ 45 mph
Where: L = Taper Length in Feet.
W = Width of Offset in Feet.
S = Posted Speed Limit, or Off-Peak 85th-Percentile Speed Prior to Work Starting, or Anticipated Operating Speed in mph.

Merging Taper Length = At Least L
Shifting Taper Length = At Least 0.5 x L
Shoulder Taper Length = At Least 0.33 x L
One-lane, Two-Way Traffic Taper Length = 50 Feet Minimum to 100 Feet Maximum
Downstream Taper Length = 50 Feet Minimum to 100 Feet Maximum

Clear Creek Parkway

Posted Speed in Advance of Work Zone = 30 mph
Posted Speed Through Work Zone = 30 mph
Road Type = Urban (Low Speed)
Distance Between Signs = 100 Feet for A, B & C
Stopping Sight Distance as a Function of Speed = 200 Feet for Longitudinal Buffer Space
Stopping Sight Distance as a Function of Speed = 200 Feet for Flagger Station Location
Maximum Channelizing Devices Spacing: = 30 Feet Adjacent to Work Areas and Along Tangent Sections
= 30 Feet Along Tapers for Lane or Shoulder Closures or Shifts
= 20 Feet Along Tapers Downstream of the Work Area
= 10 Feet Along Radii, Entrances, Driveways, and Islands
Lane Widths = 12 Feet
Shoulder Widths = 0 Feet (No Shoulders)
Merging Taper Length = (12 x 302)/60 = 180.00 Feet or 15:1 Taper Rate
→Use Merging Taper Length, L = 180.00 Feet or 15:1 Taper Rate
Shifting Taper Length = 0.5 x L = 0.5 x 180.00 = 90 Feet or 7.5:1 Taper Rate
→Use Shifting Taper Length = 96.00 Feet or 8:1 Taper Rate
Shoulder Taper Length = 0.33 x L = 0.33 x (0 x 302)/60 = 0 Feet or 0:1 Taper Rate (No Shoulders)
→Use Shoulder Taper Length = 0.00 Feet or 0:1 Taper Rate (No Shoulders)
One-lane, Two-Way Traffic Taper Length = 50 Feet Minimum to 100 Feet Maximum
→Use One-lane, Two-Way Traffic Length = 60.00 Feet or 5:1 Taper Rate
Downstream Taper Length = 50 Feet Minimum to 100 Feet Maximum
→Use Downstream Length = 60.00 Feet or 5:1 Taper Rate

Clare Road

Posted Speed in Advance of Work Zone = 25 mph
Posted Speed Through Work Zone = 25 mph
Road Type = Urban (Low Speed)
Distance Between Signs = 100 Feet for A, B & C
Stopping Sight Distance as a Function of Speed = 200 Feet for Longitudinal Buffer Space
Stopping Sight Distance as a Function of Speed = 200 Feet for Flagger Station Location
Maximum Channelizing Devices Spacing: = 25 Feet Adjacent to Work Areas and Along Tangent Sections
= 25 Feet Along Tapers for Lane or Shoulder Closures or Shifts
= 20 Feet Along Tapers Downstream of the Work Area
= 10 Feet Along Radii, Entrances, Driveways, and Islands
Lane Widths = 11 Feet
Shoulder Widths = 0 Feet (No Shoulders)
Merging Taper Length = (11 x 252)/60 = 114.58 Feet or 10.42:1 Taper Rate
→Use Merging Taper Length, L = 121.00 Feet or 11:1 Taper Rate
Shifting Taper Length = 0.5 x L = 0.5 x 114.58 = 57.29 Feet or 5.21:1 Taper Rate
→Use Shifting Taper Length = 66.00 Feet or 6:1 Taper Rate
Shoulder Taper Length = 0.33 x L = 0.33 x (0 x 252)/60 = 0 Feet or 0:1 Taper Rate (No Shoulders)
→Use Shoulder Taper Length = 0.00 Feet or 0:1 Taper Rate (No Shoulders)
One-lane, Two-Way Traffic Taper Length = 50 Feet Minimum to 100 Feet Maximum
→Use One-lane, Two-Way Traffic Length = 55.00 Feet or 5:1 Taper Rate
Downstream Taper Length = 50 Feet Minimum to 100 Feet Maximum
→Use Downstream Length = 55.00 Feet or 5:1 Taper Rate

Hedge Lane Terrace

Posted Speed in Advance of Work Zone = 30 mph
Posted Speed Through Work Zone = 30 mph
Road Type = Urban (Low Speed)
Distance Between Signs = 100 Feet for A, B & C
Stopping Sight Distance as a Function of Speed = 200 Feet for Longitudinal Buffer Space
Stopping Sight Distance as a Function of Speed = 200 Feet for Flagger Station Location
Maximum Channelizing Devices Spacing: = 30 Feet Adjacent to Work Areas and Along Tangent Sections
= 30 Feet Along Tapers for Lane or Shoulder Closures or Shifts
= 20 Feet Along Tapers Downstream of the Work Area
= 10 Feet Along Radii, Entrances, Driveways, and Islands
Lane Widths = 12 Feet
Shoulder Widths = 0 Feet (No Shoulders)
Merging Taper Length = (12 x 302)/60 = 180.00 Feet or 15:1 Taper Rate
→Use Merging Taper Length, L = 180.00 Feet or 15:1 Taper Rate
Shifting Taper Length = 0.5 x L = 0.5 x 180.00 = 90 Feet or 7.5:1 Taper Rate
→Use Shifting Taper Length = 96.00 Feet or 8:1 Taper Rate
Shoulder Taper Length = 0.33 x L = 0.33 x (0 x 302)/60 = 0 Feet or 0:1 Taper Rate (No Shoulders)
→Use Shoulder Taper Length = 0.00 Feet or 0:1 Taper Rate (No Shoulders)
One-lane, Two-Way Traffic Taper Length = 50 Feet Minimum to 100 Feet Maximum
→Use One-lane, Two-Way Traffic Length = 60.00 Feet or 5:1 Taper Rate
Downstream Taper Length = 50 Feet Minimum to 100 Feet Maximum
→Use Downstream Length = 60.00 Feet or 5:1 Taper Rate

REV.	DATE	REVISIONS	BY	APP'D
1				
2				
3				
4				
5				

Designed By: PRP
Drawn By: JCK/JAA
Checked By: HDL
Issue Date: SEPT. 2016

COPYRIGHT © -2016-SHAFER, KLINE & WARREN INC.

SHAFER, KLINE & WARREN
11250 Corporate Avenue
Lenexa, KS 66219-1392
913.888.7800 FAX: 913.888.7868
SURVEYING | ENGINEERING | CONSTRUCTION

CLEAR CREEK PARKWAY
CITY OF SHAWNEE, KANSAS

TRAFFIC CONTROL NOTES & CALCULATIONS

150561-010

LAYOUT: MODEL | BY: jadams | DATE: 20-SEP-2016 10:33:22 AM
L:\150561-010_Cad\Civil\Traffic Control\150561-010_TC-01.dgn

NOT FOR CONSTRUCTION

W20-1 (Ahead)
36" x 36"
1

W20-4(Ahead)
36" x 36"
2

W20-7
36" x 36"
3

W16-2P(Ahead)
24" x 18"
4

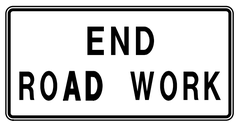

G20-2
36" x 18"
5

R11-2
48" x 30"
6

W20-3 (Ahead)
36" x 36"
7

R1-2
36" x 36" x 36"
8

R1-2aP
36" x 30"
9

W3-2
36" x 36"
10

W1-4
36" x 36"
11

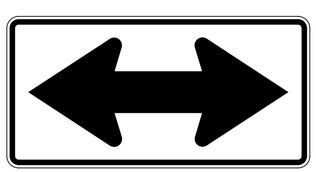

W1-7
48" x 24"
12

M4-10R
48" x 18"
13

Traffic Control Signs
Not To Scale

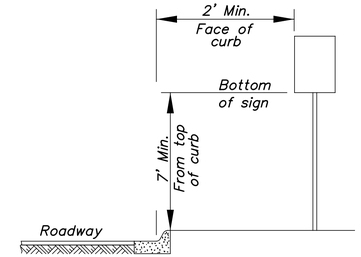

Sign Mounting Detail
Not To Scale

Note:
The height of the secondary sign mounted below another sign may be 6' measured from the bottom of sign to the near edge of the pavement. Signs shall not overlap each other.

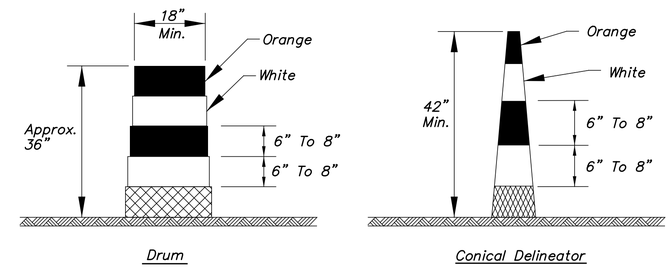

Channelizer Detail
Not To Scale

Drums and conical delineators shall have at least two orange and two white 6" to 8" wide retroreflective stripes. Additional stripes may be non-retroreflective. If there are non-retroreflective spaces between adjacent stripes, they shall be no more than 3" wide.

All retroreflective stripes on drums shall be ASTM Type III sheeting. The white stripes on conical delineators shall be ASTM Type III sheeting. Orange stripes on all conical delineators shall be fluorescent orange ASTM Type IV sheeting.

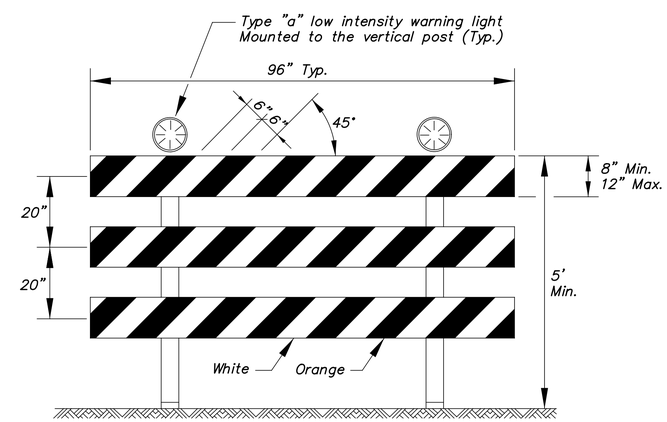

Type III Barricade With Type A Lights Detail
Not To Scale

Sign Legend

W16-2P — MUTCD Designation Number
24" x 18" — Sign Dimension/Sizes
4 — Sign Number on Plans

REV.	DATE	REVISIONS	BY	APP'D
1				
2				
3				
4				
5				

COPYRIGHT © -2016-SHAFER, KLINE & WARREN INC.

Designed By: PRP
Drawn By: JCK/JAA
Checked By: HDL
Issue Date: SEPT. 2016

SHAFER, KLINE & WARREN
11250 Corporate Avenue
Lenexa, KS 66219-1392
913.888.7800 FAX: 913.888.7868
SURVEYING | ENGINEERING | CONSTRUCTION

CLEAR CREEK PARKWAY
CITY OF SHAWNEE, KANSAS

TRAFFIC CONTROL LEGEND & DETAILS

150561-010

LAYOUT: MODEL | BY: jaddams | DATE: 20-SEP-2016 10:34:13 AM
L:\150561-010_Cad\Civil\Traffic Control\150561-010_TC-02.dgn

NOT FOR CONSTRUCTION

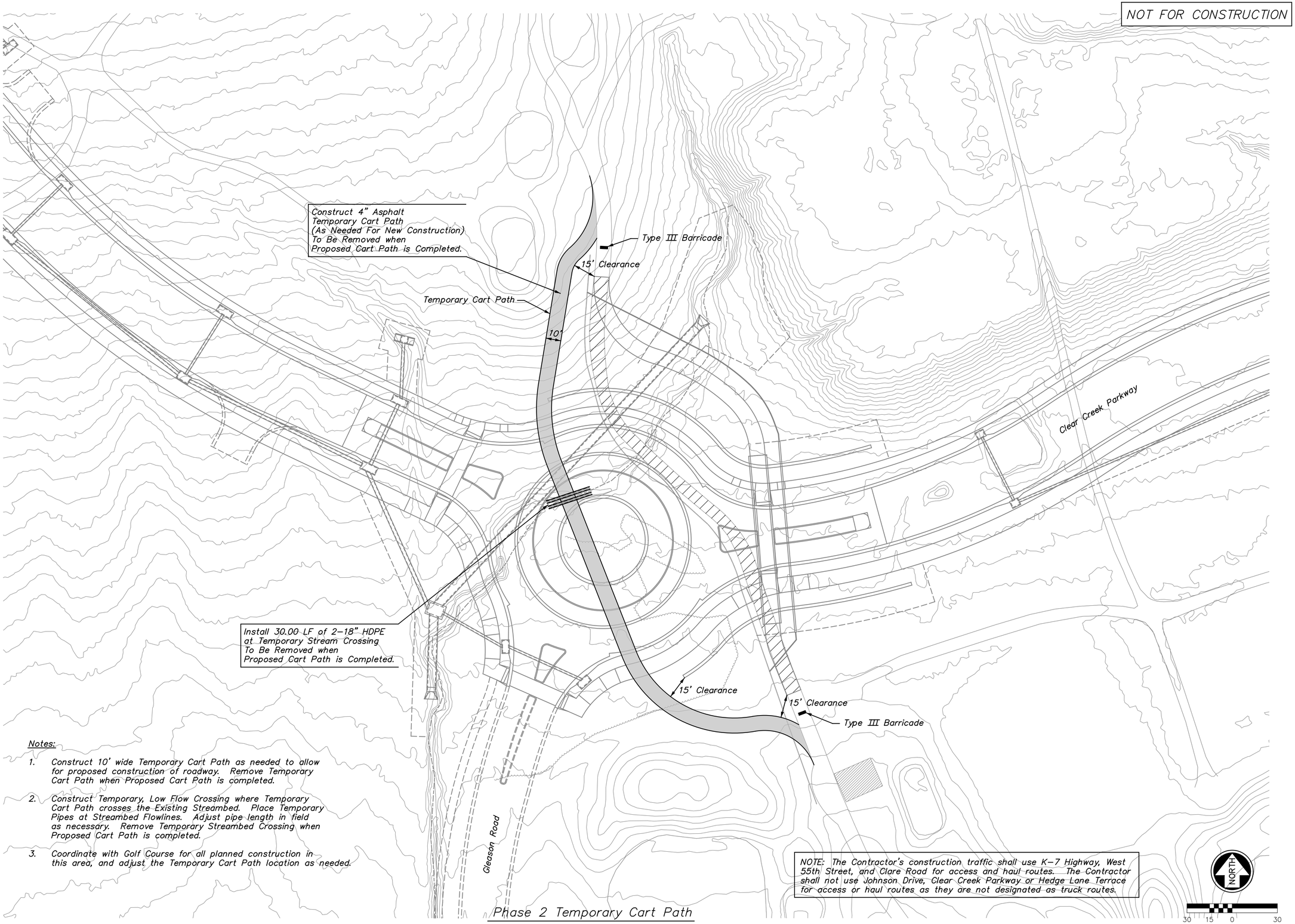

Notes:

1. Construct 10' wide Temporary Cart Path as needed to allow for proposed construction of roadway. Remove Temporary Cart Path when Proposed Cart Path is completed.
2. Construct Temporary, Low Flow Crossing where Temporary Cart Path crosses the Existing Streambed. Place Temporary Pipes at Streambed Flowlines. Adjust pipe length in field as necessary. Remove Temporary Streambed Crossing when Proposed Cart Path is completed.
3. Coordinate with Golf Course for all planned construction in this area, and adjust the Temporary Cart Path location as needed.

NOTE: The Contractor's construction traffic shall use K-7 Highway, West 55th Street, and Clare Road for access and haul routes. The Contractor shall not use Johnson Drive, Clear Creek Parkway or Hedge Lane Terrace for access or haul routes as they are not designated as truck routes.

Phase 2 Temporary Cart Path

REV.	DATE	REVISIONS	BY	APP'D
1				
2				
3				
4				
5				

Designed By: PRP
Drawn By: JCK/JAA
Checked By: HDL
Issue Date: SEPT. 2016

COPYRIGHT © -2016-SHAFER, KLINE & WARREN INC.

SHAFER, KLINE & WARREN
11250 Corporate Avenue
Lenexa, KS 66219-1392
913.888.7800 FAX: 913.888.7868
SURVEYING | ENGINEERING | CONSTRUCTION

CLEAR CREEK PARKWAY
CITY OF SHAWNEE, KANSAS

TRAFFIC CONTROL PLAN (1)
PHASE 2

150561-010

LAYOUT: MODEL | BY: jadams | DATE: 20-SEP-2016 10:34:20 AM
L:\150561-010_Cad\Civil\Traffic Control\150561-010_TC-03.dgn

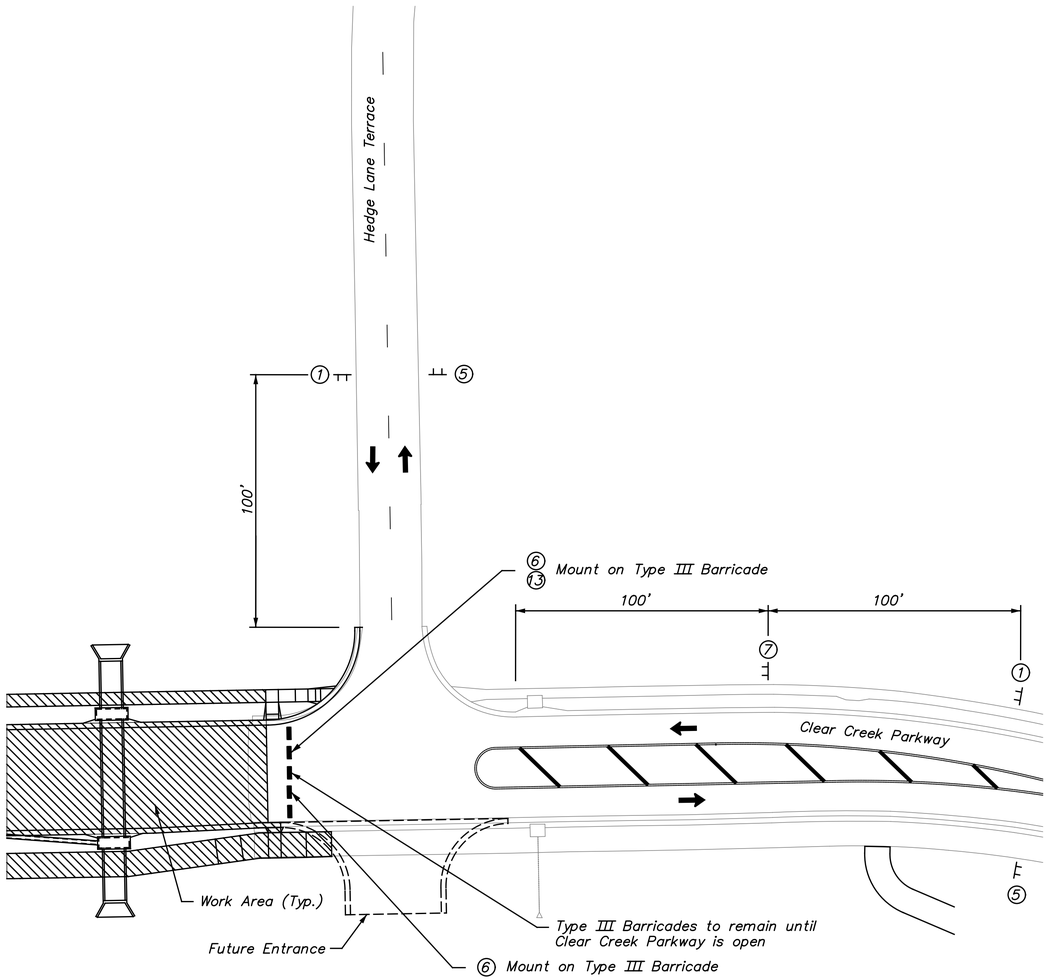

Legend

- Channelizers
- Work Area
- Construction Sign
- Traffic Flow Arrow
- Type III Barricade with Type A Lights
- Flagger
- ① Sign Number on Plans

NOTE: The Contractor's construction traffic shall use K-7 Highway, West 55th Street, and Clare Road for access and haul routes. The Contractor shall not use Johnson Drive, Clear Creek Parkway or Hedge Lane Terrace for access or haul routes as they are not designated as truck routes.

NORTH

30 15 0 30

Phase 3 & 4 Clear Creek Parkway Traffic Control

NOT FOR CONSTRUCTION

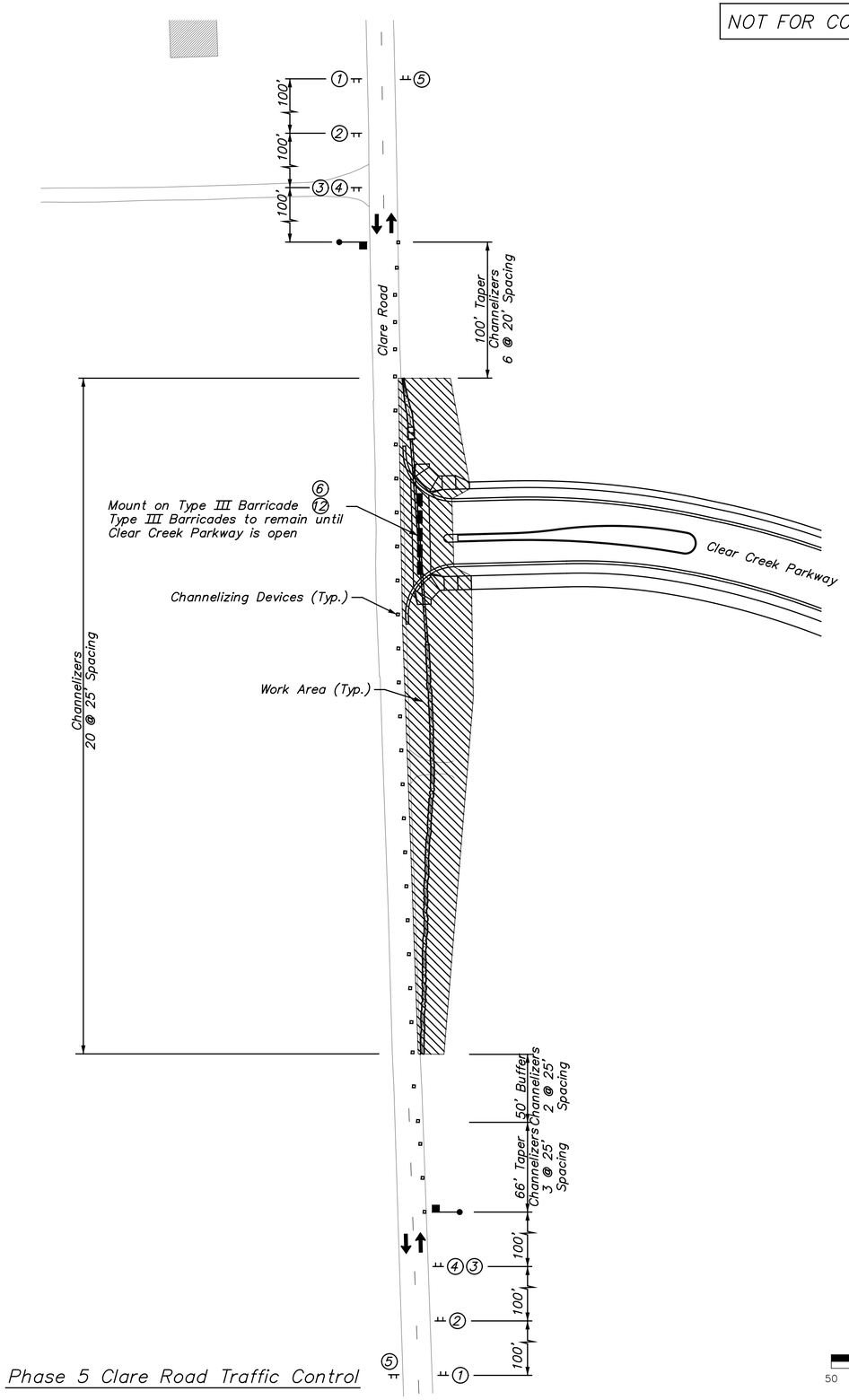

NORTH

50 25 0 50

Phase 5 Clare Road Traffic Control

REV.	DATE	REVISIONS	BY	APP'D
1				
2				
3				
4				
5				

Designed By: PRP
Drawn By: JCK/JAA
Checked By: HDL
Issue Date: SEPT. 2016

COPYRIGHT © -2016-SHAFER, KLINE & WARREN INC.

SHAFER, KLINE & WARREN
11250 Corporate Avenue
Lenexa, KS 66219-1392
913.888.7800 FAX: 913.888.7868
SURVEYING | ENGINEERING | CONSTRUCTION

CLEAR CREEK PARKWAY
CITY OF SHAWNEE, KANSAS

TRAFFIC CONTROL PLAN (2)
PHASE 3, 4 & 5

150561-010

SHEET NO.
113 OF 182

LAYOUT: MODEL | BY: jadams | DATE: 20-SEP-2016 10:34:22 AM
L:\150561-010_Cad\Civil\Traffic Control\150561-010_TC-04.dgn

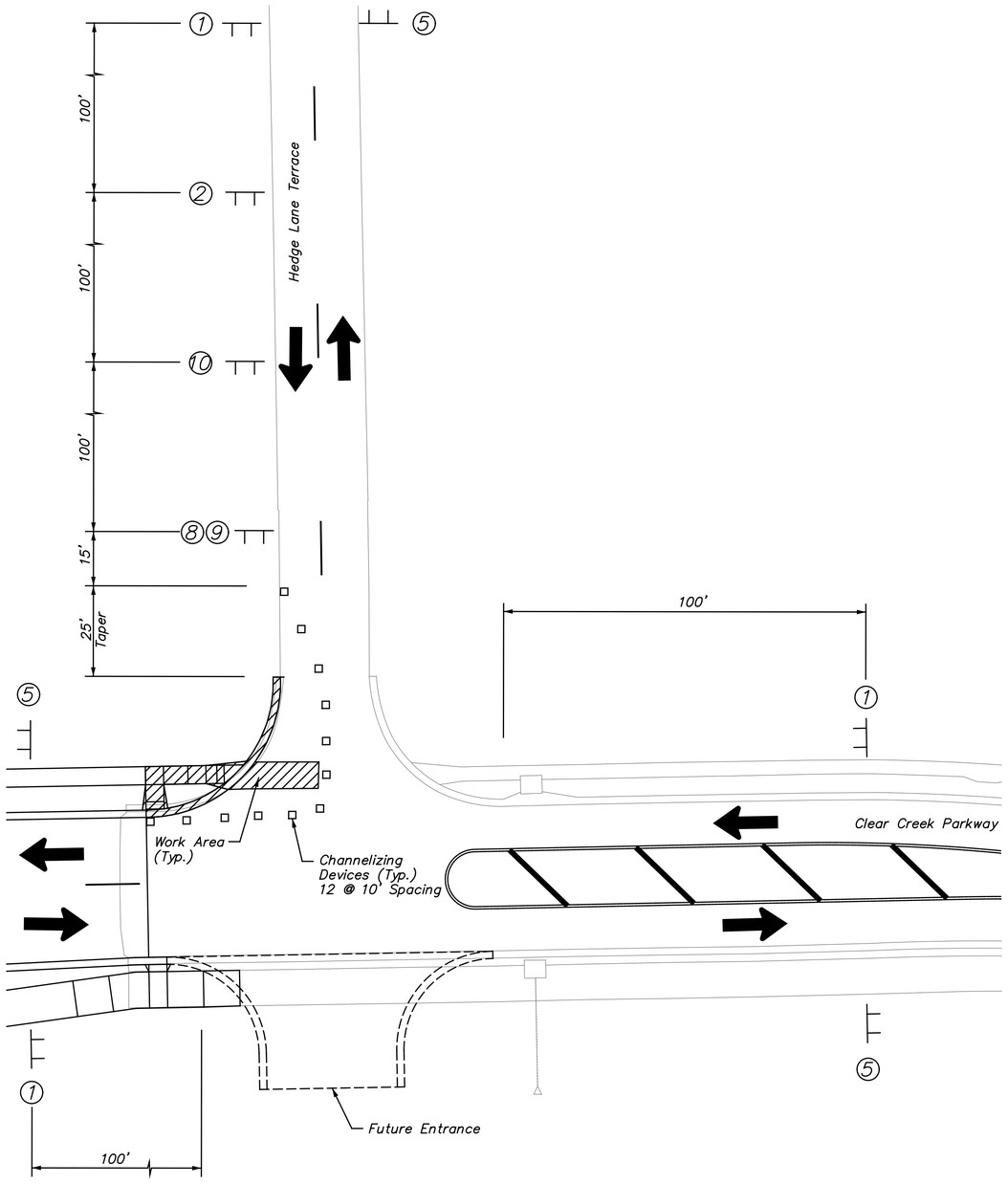

Phase 8A Hedge Lane Terrace Traffic Control

NOT FOR CONSTRUCTION

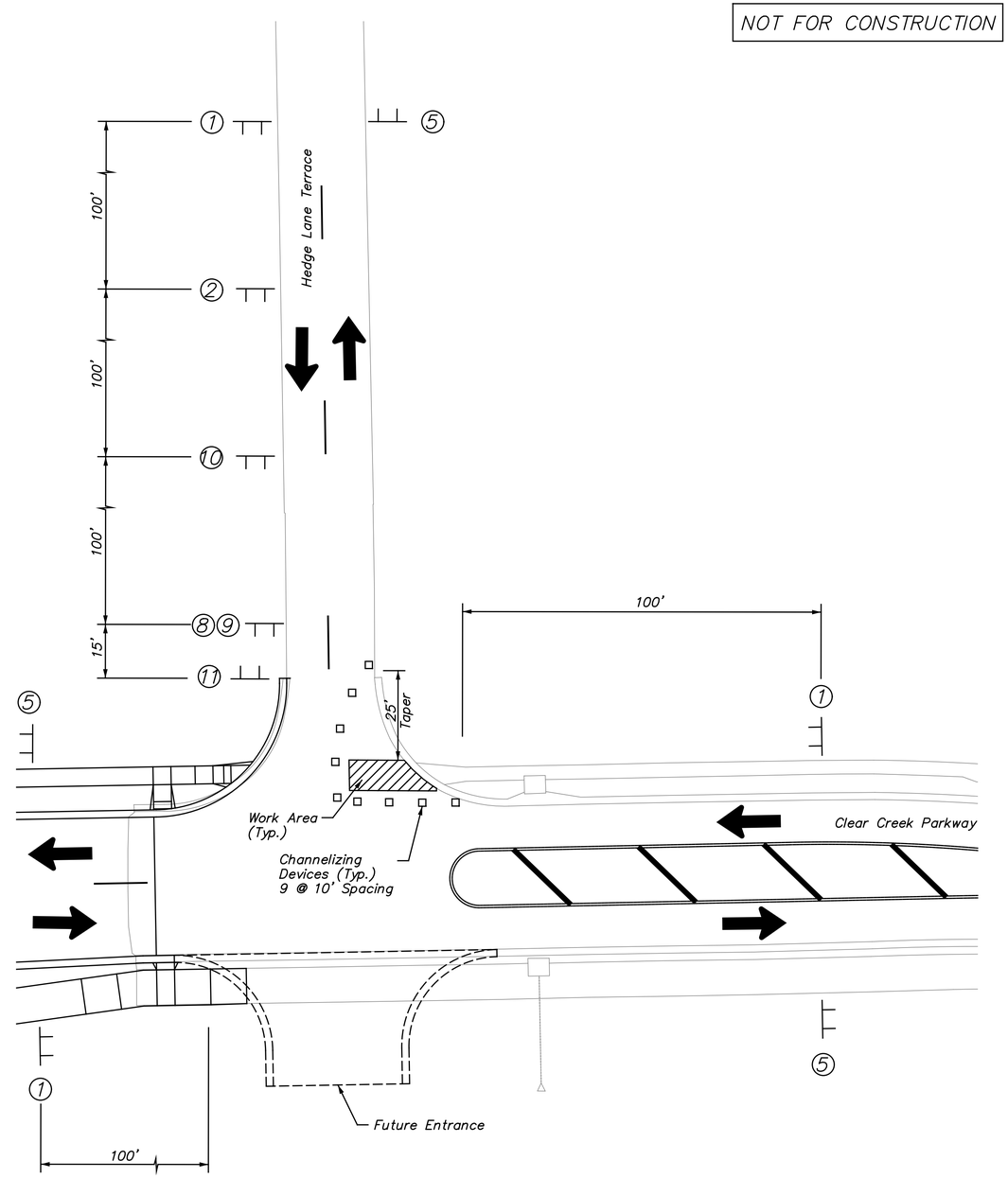

NOTE: The Contractor's construction traffic shall use K-7 Highway, West 55th Street, and Clare Road for access and haul routes. The Contractor shall not use Johnson Drive, Clear Creek Parkway or Hedge Lane Terrace for access or haul routes as they are not designated as truck routes.

Phase 8B Hedge Lane Terrace Traffic Control

NORTH

20 10 0 20

REV.	DATE	REVISIONS	BY	APP'D
1				
2				
3				
4				
5				

Designed By: PRP
Drawn By: JCK/JAA
Checked By: HDL
Issue Date: SEPT. 2016

COPYRIGHT © -2016-SHAFER, KLINE & WARREN INC.

SHAFER, KLINE & WARREN
11250 Corporate Avenue
Lenexa, KS 66219-1392
913.888.7800 FAX: 913.888.7868
SURVEYING | ENGINEERING | CONSTRUCTION

CLEAR CREEK PARKWAY
CITY OF SHAWNEE, KANSAS

TRAFFIC CONTROL PLAN (3)
PHASE 8A & 8B

150561-010

SHEET NO.
114 OF 182

LAYOUT: MODEL | BY: jadams | DATE: 20-SEP-2016 10:34:24 AM
L:\150561-010_Cad\Civil\Traffic Control\150561-010_TC-05.dgn

NOT FOR CONSTRUCTION

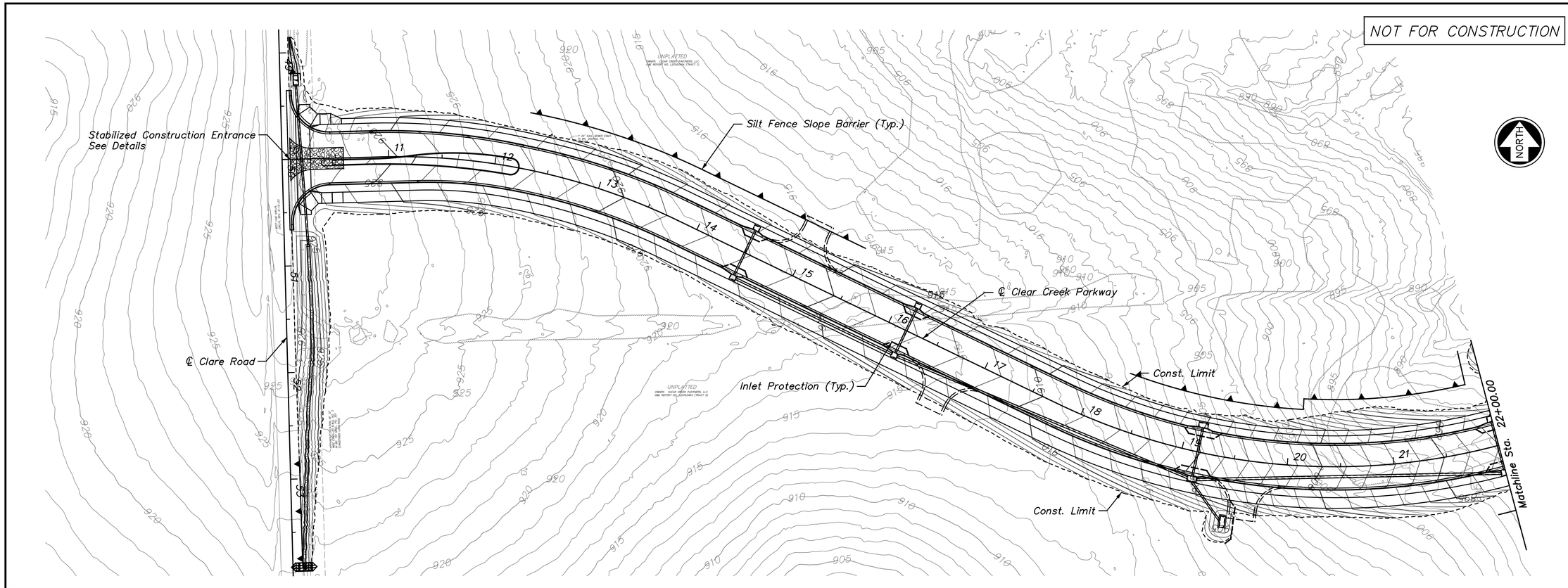

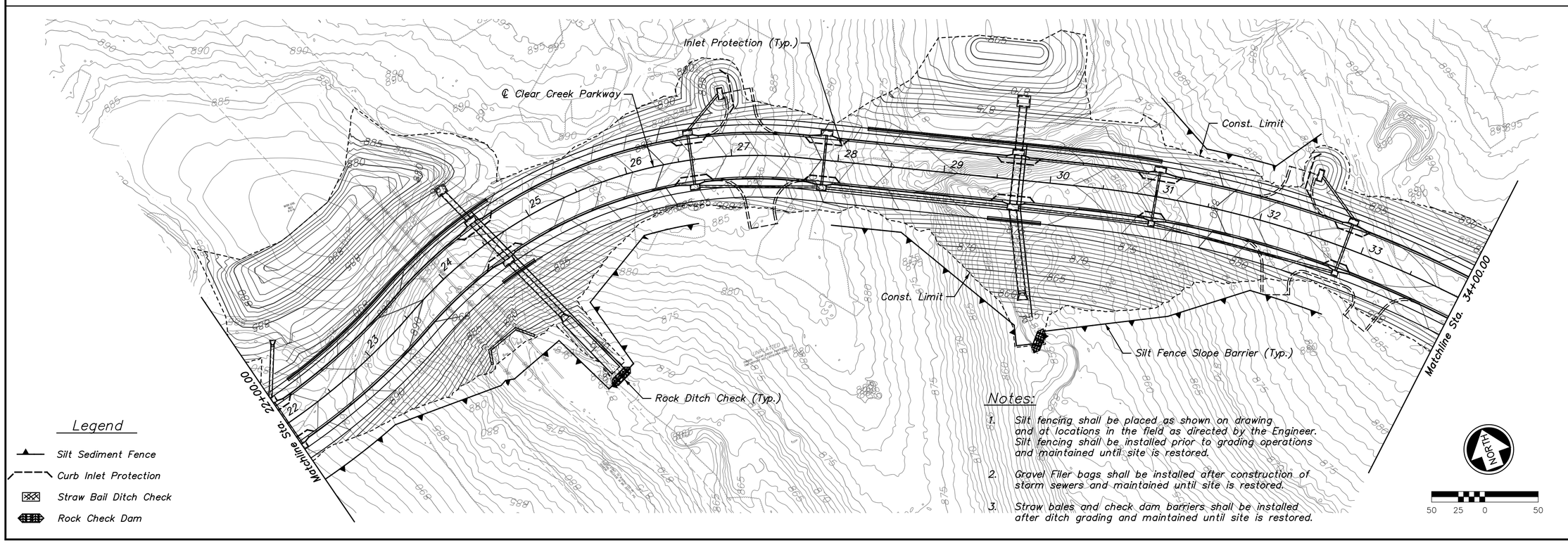

Legend

- Silt Sediment Fence
- Curb Inlet Protection
- Straw Bail Ditch Check
- Rock Check Dam

Notes:

1. Silt fencing shall be placed as shown on drawing and at locations in the field as directed by the Engineer. Silt fencing shall be installed prior to grading operations and maintained until site is restored.
2. Gravel Filler bags shall be installed after construction of storm sewers and maintained until site is restored.
3. Straw bales and check dam barriers shall be installed after ditch grading and maintained until site is restored.

REV.	DATE	REVISIONS	BY	APP'D
1				
2				
3				
4				
5				

Designed By: PRP
Drawn By: JCK/JAA
Checked By: HDL
Issue Date: SEPT. 2016

COPYRIGHT © -2016-SHAFER, KLINE & WARREN INC.

SHAFER, KLINE & WARREN
11250 Corporate Avenue
Lenexa, KS 66219-1392
913.888.7800 FAX: 913.888.7868
SURVEYING | ENGINEERING | CONSTRUCTION

CLEAR CREEK PARKWAY
CITY OF SHAWNEE, KANSAS

EROSION CONTROL PLAN (1)
STA. 10+00.00 TO STA. 34+00.00

150561-010

SHEET NO.
115 OF 182

LAYOUT: MODEL | BY: jaddams | DATE: 20-SEP-2016 10:34:27 AM
L:\150561-010_Cad\Civil\Erosion Control\150561-010_EC-01.dgn

NOT FOR CONSTRUCTION

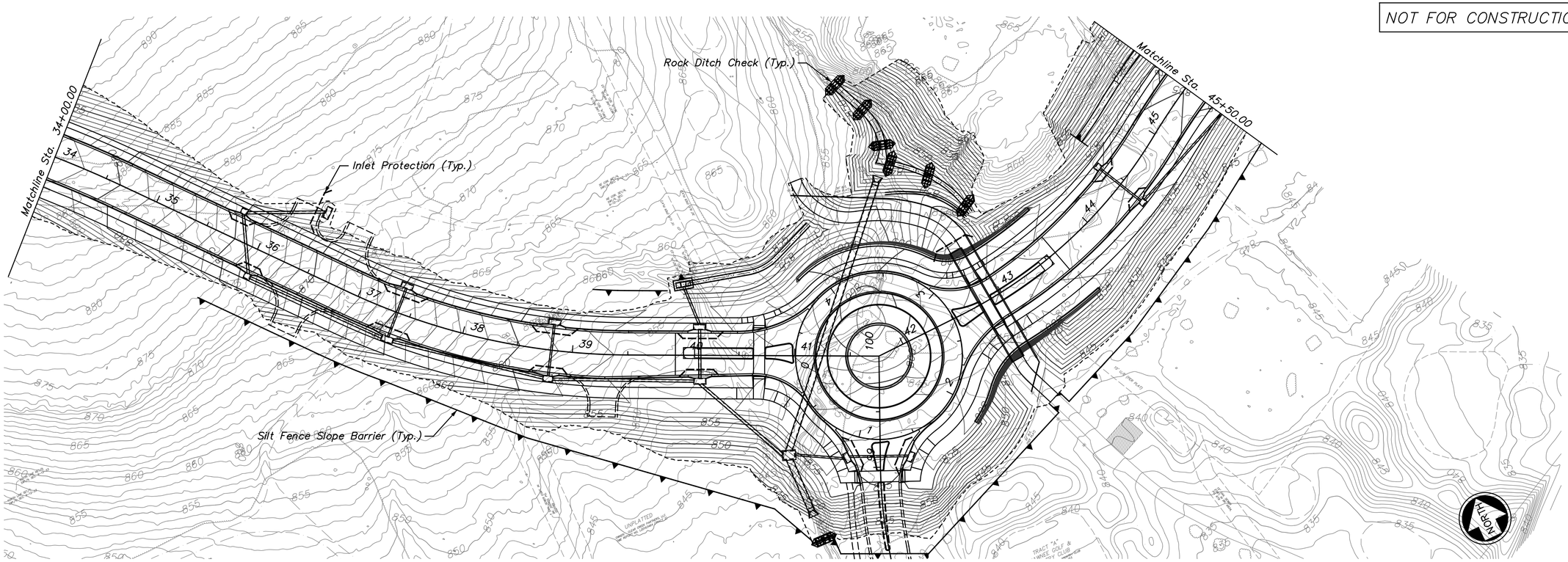

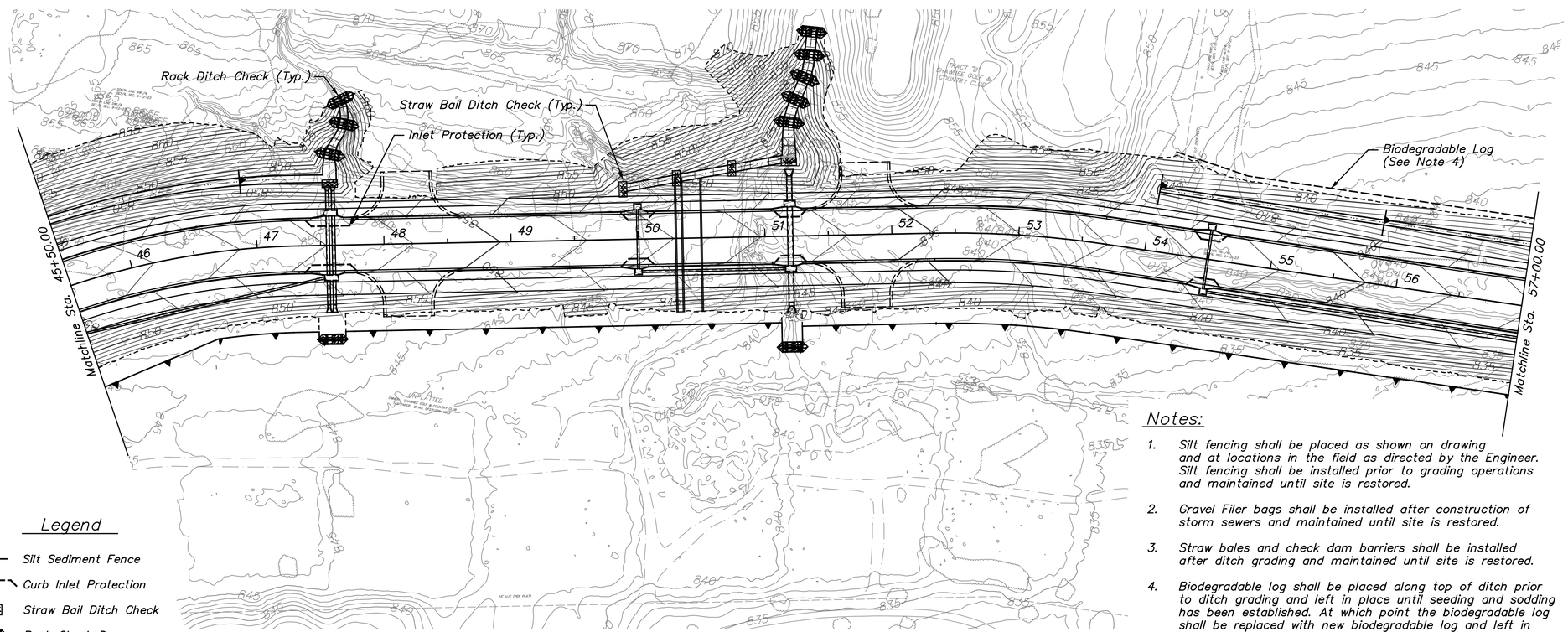

Legend

- Silt Sediment Fence
- Curb Inlet Protection
- Straw Bail Ditch Check
- Rock Check Dam

Notes:

1. Silt fencing shall be placed as shown on drawing and at locations in the field as directed by the Engineer. Silt fencing shall be installed prior to grading operations and maintained until site is restored.
2. Gravel Filer bags shall be installed after construction of storm sewers and maintained until site is restored.
3. Straw bales and check dam barriers shall be installed after ditch grading and maintained until site is restored.
4. Biodegradable log shall be placed along top of ditch prior to ditch grading and left in place until seeding and sodding has been established. At which point the biodegradable log shall be replaced with new biodegradable log and left in place after construction is complete.

NORTH

50 25 0 50

REV.	DATE	REVISIONS	BY	APP'D
5				
4				
3				
2				
1				

Designed By: PRP
Drawn By: JCK/JAA
Checked By: HDL
Issue Date: SEPT. 2016

COPYRIGHT © -2016-SHAFER, KLINE & WARREN INC.

SHAFER, KLINE & WARREN
11250 Corporate Avenue
Lenexa, KS 66219-1392
913.888.7800 FAX: 913.888.7868
SURVEYING | ENGINEERING | CONSTRUCTION

CLEAR CREEK PARKWAY
CITY OF SHAWNEE, KANSAS

EROSION CONTROL PLAN (2)
STA. 34+00.00 TO STA. 57+00.00

150561-010

LAYOUT: MODEL | BY: jadams | DATE: 20-SEP-2016 10:34:33 AM
L:\150561-010_Cad\Civil\Erosion Control\150561-010_EC-02.dgn

NOT FOR CONSTRUCTION

Notes:

1. Silt fencing shall be placed as shown on drawing and at locations in the field as directed by the Engineer. Silt fencing shall be installed prior to grading operations and maintained until site is restored.
2. Gravel Filer bags shall be installed after construction of storm sewers and maintained until site is restored.
3. Straw bales and check dam barriers shall be installed after ditch grading and maintained until site is restored.
4. Biodegradable log shall be placed along top of ditch prior to ditch grading and left in place until seeding and sodding has been established. At which point the biodegradable log shall be replaced with new biodegradable log and left in place after construction is complete.

Legend

- Silt Sediment Fence
- Curb Inlet Protection
- Straw Bail Ditch Check
- Rock Check Dam

REV.	DATE	REVISIONS	BY	APP'D
5				
4				
3				
2				
1				

Designed By: PRP
Drawn By: JCK/JAA
Checked By: HDL
Issue Date: SEPT. 2016

COPYRIGHT © -2016-SHAFER, KLINE & WARREN INC.

SHAFER, KLINE & WARREN
11250 Corporate Avenue
Lenexa, KS 66219-1392
913.888.7800 FAX: 913.888.7868
SURVEYING | ENGINEERING | CONSTRUCTION

CLEAR CREEK PARKWAY
CITY OF SHAWNEE, KANSAS

EROSION CONTROL PLAN (3)
STA. 57+00.00 TO STA. 61+50.00

150561-010

LAYOUT: MODEL | BY: jadams | DATE: 20-SEP-2016 10:34:40 AM
L:\150561-010_Cad\Civil\Erosion Control\150561-010_EC-03.dgn

NOT FOR CONSTRUCTION

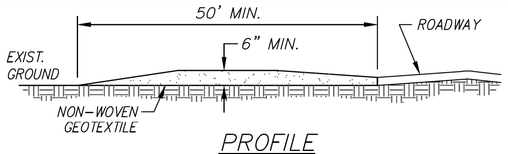

PROFILE

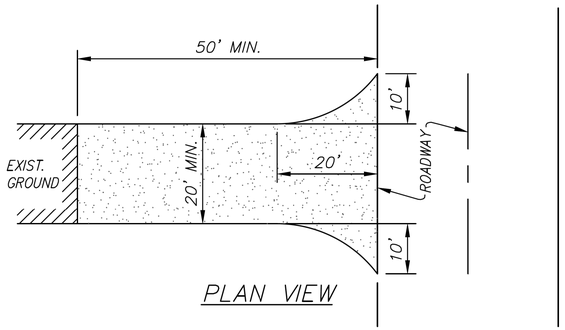

PLAN VIEW

CONSTRUCTION SPECIFICATIONS

1. STONE SIZE – USE 3" STONE, OR RECLAIMED OR RECYCLED EQUIVALENT.
2. LENGTH – AS REQUIRED, BUT NOT LESS THAN 50 FEET.
3. THICKNESS – NOT LESS THAN SIX (6) INCHES.
4. WIDTH – TWENTY (20) FOOT MINIMUM, BUT NOT LESS THAN THE FULL WIDTH AT POINTS WHERE INGRESS OR EGRESS OCCURS.
5. NON-WOVEN GEOTEXTILE – WILL BE PLACED OVER THE ENTIRE AREA PRIOR TO PLACING OF STONE.
6. WASHING – WHEELS SHALL BE CLEANED TO REMOVE SEDIMENT PRIOR TO ENTRANCE ONTO PUBLIC RIGHTS-OF-WAY. WHEN WASHING IS REQUIRED, IT SHALL BE DONE ON AN AREA STABILIZED WITH STONE AND WHICH DRAINS INTO AN APPROVED SEDIMENT TRAPPING DEVICE.

STABILIZED CONSTRUCTION ENTRANCE

TEMPORARY CONSTRUCTION ENTRANCE PAD NOTES:

A. INSTALLATION:

1. AVOID LOCATING ON STEEP SLOPES OR AT CURVES ON PUBLIC ROADS. IF POSSIBLE, LOCATE WHERE PERMANENT ROADS WILL EVENTUALLY BE CONSTRUCTED.
2. REMOVE ALL VEGETATION AND OTHER UNSUITABLE MATERIAL FROM THE FOUNDATION AREA, GRADE, AND CROWN FOR POSITIVE DRAINAGE.
3. IF SLOPE TOWARDS THE PUBLIC ROAD EXCEEDS 2%, CONSTRUCT A 6-TO 8-INCH HIGH RIDGE WITH 3H:1V SIDE SLOPES ACROSS THE FOUNDATION APPROXIMATELY 15 FEET FROM THE EDGE OF THE PUBLIC ROAD TO DIVERT RUNOFF AWAY FROM IT.
4. INSTALL PIPE UNDER THE ENTRANCE IF NEEDED TO MAINTAIN DRAINAGE DITCHES ALONG PUBLIC ROADS.
5. PLACE STONE TO DIMENSIONS AND GRADE AS SHOWN ON PLANS. LEAVE SURFACE SMOOTH AND SLOPED FOR DRAINAGE.
6. DIVERT ALL SURFACE RUNOFF AND DRAINAGE FROM THE ENTRANCE TO A SEDIMENT CONTROL DEVICE.
7. IF WET CONDITIONS ARE ANTICIPATED, PLACE GEOTEXTILE FABRIC ON THE GRADED FOUNDATION TO IMPROVE STABILITY.

B. TROUBLESHOOTING:

1. CONSULT WITH A QUALIFIED DESIGN PROFESSIONAL IF ANY OF THE FOLLOWING OCCUR:
   - A. INADEQUATE RUNOFF CONTROL TO THE EXTENT THAT SEDIMENT WASHES ONTO PUBLIC ROAD – INSTALL DIVERSIONS OR OTHER RUNOFF CONTROL MEASURES.
   - B. SMALL STONE, THIN PAD, OR ABSENCE OF GEOTEXTILE FABRIC RESULTS IN RUTS AND MUDDY CONDITIONS AS STONE IS PRESSED INTO SOIL – INCREASE STONE SIZE OR PAD THICKNESS OR ADD GEOTEXTILE FABRIC.
   - C. PAD TOO SHORT FOR HEAVY CONSTRUCTION TRAFFIC – EXTEND PAD BEYOND THE MINIMUM 50-FOOT LENGTH AS NECESSARY.

C. INSPECTION AND MAINTENANCE:

1. INSPECT STONE PAD AND SEDIMENT DISPOSAL AREA WEEKLY AND AFTER 1/2-INCH OR GREATER STORM EVENTS.
2. RESHAPE PAD AS NEEDED FOR PROPER DRAINAGE AND RUNOFF CONTROL.
3. TOPDRESS WITH CLEAN 2-AND 3-INCH STONE AS NEEDED.
4. IMMEDIATELY REMOVE MUD OR SEDIMENT TRACKED OR WASHED ONTO PUBLIC ROAD. REPAIR ANY BROKEN ROAD PAVEMENT IMMEDIATELY.
5. REMOVE ALL TEMPORARY ROAD MATERIALS FROM AREAS WHERE PERMANENT VEGETATION WILL BE ESTABLISHED.
6. PERIODIC INSPECTION AS NEEDED MAINTENANCE SHALL BE PROVIDED AFTER EACH RAIN.

STRAW BALE BARRIER NOTES:

A. INSTALLATION:

1. EXCAVATE A TRENCH AT LEAST 4 INCHES DEEP, A BALE'S WIDTH, AND LONG ENOUGH THAT THE END BALES ARE SOMEWHAT UPSLOPE OF THE SEDIMENT POOL.
2. PLACE EACH BALE END TO END IN THE TRENCH SO THE BINDINGS ARE ORIENTED AROUND THE SIDES RATHER THAN TOP TO BOTTOM.
3. ANCHOR THE BALES BY DRIVING TWO 36-INCH LONG, 2x2-INCH HARDWOOD STAKES THROUGH EACH BALE UNTIL NEARLY FLUSH WITH THE TOP. DRIVE THE FIRST STAKE TOWARD THE PREVIOUSLY LAID BALE TO FORCE THE BALES TOGETHER.
4. WEDGE LOOSE STRAW INTO ANY GAPS BETWEEN THE BALES TO PREVENT SEDIMENT-LADEN WATER FROM LEAKING THROUGH.
5. BACKFILL AND COMPACT THE EXCAVATED SOIL AGAINST THE BALES TO GROUND LEVEL ON THE DOWNSLOPE SIDE AND TO 4 INCHES ABOVE GROUND LEVEL ON THE UPSLOPE SIDE.

B. CONSTRUCTION SPECIFICATIONS:

1. ONLY USE A PERIMETER CONTROL FOR LESS THAN ONE ACRE OF RUNOFF AREA.
2. DETERMINE EXACT LOCATION OF UNDERGROUND UTILITIES.
3. GRADE ALIGNMENT OF BARRIER AS NEEDED TO PROVIDE BROAD, NEARLY LEVEL AREA UPSTREAM OF BARRIER.

C. INSPECTION AND MAINTENANCE:

1. INSPECT STRAW BALE BARRIERS AFTER EACH STORM EVENT AND REMOVE ANY SEDIMENT DEPOSITS PROMPTLY, TAKING CARE NOT TO UNDERMINE THE ENTRENCHED BALES.
2. INSPECT PERIODICALLY FOR DETERIORATION OR DAMAGE FROM CONSTRUCTION ACTIVITIES. REPLACE DAMAGED BALES IMMEDIATELY.
3. AFTER THE CONTRIBUTING DRAINAGE AREA HAS BEEN STABILIZED, REMOVE ALL STRAW BALES AND SEDIMENT, BRING THE DISTURBED AREA TO GRADE, AND STABILIZE.

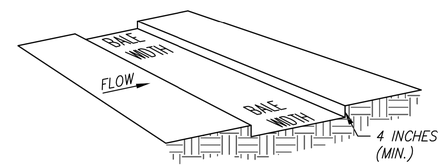

1. EXCAVATE THE TRENCH

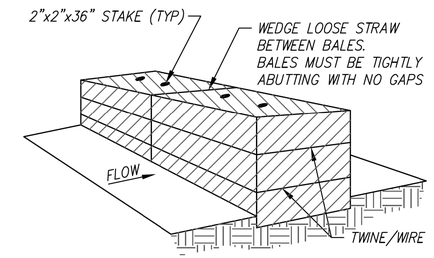

2. PLACE AND STAKE STRAW BALES

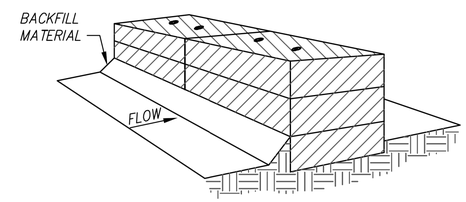

3. BACKFILL AND COMPACT EXCAVATED SOIL

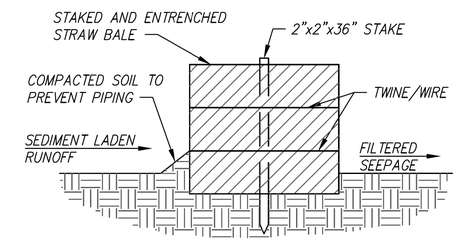

CROSS-SECTION OF A PROPERLY INSTALLED STRAW BALE

STRAW BALE BARRIER DETAIL

SEDIMENTATION FENCE NOTES:

A. INSTALLATION:

1. THE HEIGHT OF SEDIMENT FENCE SHALL BE A MINIMUM OF 30 INCHES ABOVE THE ORIGINAL GROUND SURFACE AND SHALL NOT EXCEED 36 INCHES ABOVE THE GROUND SURFACE.
2. THE FABRIC SHALL BE PURCHASED IN A CONTINUOUS ROLL CUT TO THE LENGTH OF THE BARRIER TO AVOID THE USE OF JOINTS. WHEN JOINTS ARE UNAVOIDABLE, THE FILTER FABRIC SHALL BE SECURELY SPLICED TOGETHER ONLY AT SUPPORT POSTS, WITH A MAXIMUM 6-INCH OVERLAP.
3. DIG A TRENCH AT LEAST 6 INCHES DEEP AND 24 INCHES WIDE ALONG THE FENCE ALIGNMENT.
4. DRIVE POSTS AT LEAST 12 INCHES AND NO MORE THAN 18 INCHES INTO THE GROUND ON THE DOWNSLOPE SIDE OF THE TRENCH. SPACE POSTS A MAXIMUM OF 10 FEET APART.
5. EXTRA-STRENGTH SEDIMENT FENCE FABRIC SHALL BE USED. POSTS FOR THIS TYPE OF FABRIC SHALL BE PLACED A MAXIMUM OF 10' APART. THE SEDIMENT FABRIC SHALL BE FASTENED SECURELY TO THE UPSLOPE SIDE OF THE POSTS USING A MINIMUM OF ONE INCH LONG, HEAVY-DUTY WIRE STAPLES OR TIE-WIRES, AND 24 INCHES OF THE FABRIC SHALL BE EXTENDED INTO THE TRENCH. THE FABRIC SHALL NOT BE STAPLED TO EXISTING TREES.
6. PLACE THE BOTTOM 2 FEET OF FABRIC IN THE MINIMUM-OF-6-INCH DEEP TRENCH, LAPPING TOWARD THE UPSLOPE SIDE. BACKFILL WITH COMPACTED EARTH OR WASHED STONE TO A HEIGHT OF 6" ABOVE GROUND LEVEL.
7. IF A SEDIMENT FENCE IS TO BE CONSTRUCTED ACROSS A DITCH LINE OR SWALE, IT MUST BE OF SUFFICIENT LENGTH TO ELIMINATE ENDFLOW, AND THE PLAN CONFIGURATION SHALL RESEMBLE AN ARC OR HORSESHOE, PLACED ON A CONTOUR, WITH THE ENDS ORIENTED UPSLOPE. EXTRA-STRENGTH SEDIMENT FABRIC SHALL BE USED WITH A MAXIMUM 3-FOOT SPACING OF POSTS.
8. TO REDUCE MAINTENANCE, EXCAVATE A SHALLOW SEDIMENT STORAGE AREA IN THE UPSLOPE SIDE OF THE FENCE. PROVIDE GOOD ACCESS IN AREAS OF HEAVY SEDIMENTATION FOR CLEAN OUT AND MAINTENANCE.
9. SEDIMENT FENCES SHALL BE REMOVED WHEN THEY HAVE SERVED THEIR USEFUL PURPOSE, BUT NOT BEFORE THE UPSLOPE AREA HAS BEEN PERMANENTLY STABILIZED.

B. CONSTRUCTION SPECIFICATIONS:

1. DETERMINE THE EXACT LOCATION OF UNDERGROUND UTILITIES, BEFORE FENCE INSTALLATION SO UTILITIES ARE NOT DISTURBED.
2. GRADE ALIGNMENT OF FENCE AS NEEDED TO PROVIDE A BROAD, NEARLY LEVEL AREA UPSTREAM OF FENCE TO ALLOW SEDIMENT COLLECTION AREA.

C. INSPECTION AND MAINTENANCE:

1. INSPECT SEDIMENT FENCES AT LEAST ONCE A WEEK AND AFTER EACH RAINFALL. MAKE ANY REQUIRED REPAIRS IMMEDIATELY.
2. SHOULD THE FABRIC OF A SEDIMENT FENCE COLLAPSE, TEAR, DECOMPOSE, OR BECOME INEFFECTIVE, REPLACE IT PROMPTLY.
3. REMOVE SEDIMENT DEPOSITS AS NECESSARY TO PROVIDE ADEQUATE STORAGE VOLUME FOR THE NEXT RAIN AND TO REDUCE PRESSURE ON THE FENCE. AVOID DAMAGING OR UNDERMINING THE FENCE DURING CLEANOUT. SEDIMENT ACCUMULATION SHOULD NOT EXCEED 1/2 THE HEIGHT OF THE FENCE.
4. REMOVE ALL FENCING MATERIALS AND UNSTABLE SEDIMENT DEPOSITS, AND BRING THE AREA TO GRADE AND STABILIZE IT AFTER THE CONTRIBUTING DRAINAGE AREA HAS BEEN PROPERLY AND COMPLETELY STABILIZED.

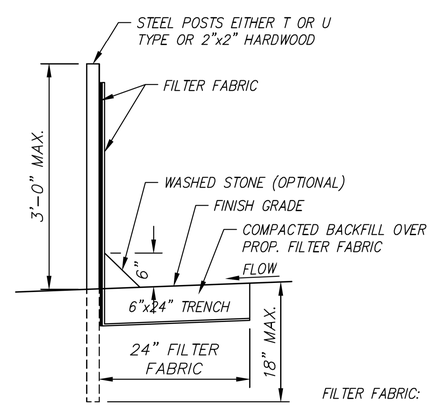

CROSS SECTION

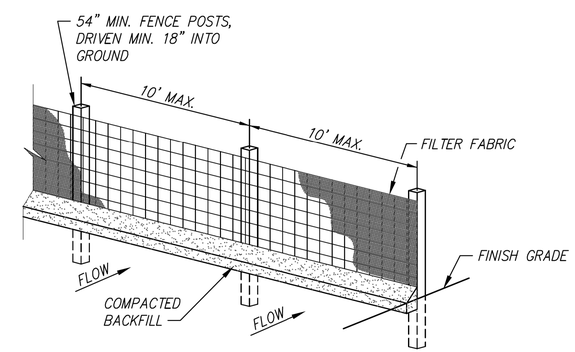

ELEVATION

FILTER FABRIC: FILTER X MIRAFI 100X, STABILINKA T140N OR APPROVED EQUAL

PREFABRICATED UNIT: GEOFAB, ENVIROFENCE, OR APPROVED EQUAL

SEDIMENT FENCE

Date	Revision	By	Appr.
3-1-14	SHAWNEE DESIGN & CONSTRUCTION MANUAL REVISIONS	MRS	PJL
8-21-12	REVISED TO MATCH CONSTRUCTION SPECIFICATION REVISIONS	MRS	PJL

EROSION AND SEDIMENT CONTROL

DEVELOPMENT SERVICES

Good Starts Here SHAWNEE KANSAS

DATE:	08-27-2007	3100
DRAWN BY:	MRS	
CHECKED BY:	PJL	SHEET 1 OF 1

REV.	DATE	REVISIONS	BY	APP'D
5				
4				
3				
2				
1				

Designed By: PRP
Drawn By: JCK/JAA
Checked By: HDL
Issue Date: SEPT. 2016

COPYRIGHT © -2016-SHAFER, KLINE & WARREN INC.

SHAFER, KLINE & WARREN
11250 Corporate Avenue
Lenexa, KS 66219-1392
913.888.7800 FAX: 913.888.7868
SURVEYING | ENGINEERING | CONSTRUCTION

CLEAR CREEK PARKWAY
CITY OF SHAWNEE, KANSAS

EROSION CONTROL DETAILS (1)

150561-010

SHEET NO. 118 OF 182

LAYOUT: MODEL | BY: jadams | DATE: 20-SEP-2016 10:34:44 AM
L:\150561-010_Cad\Civil\Erosion Control\150561-010_EC-DET-01.dgn

NOT FOR CONSTRUCTION

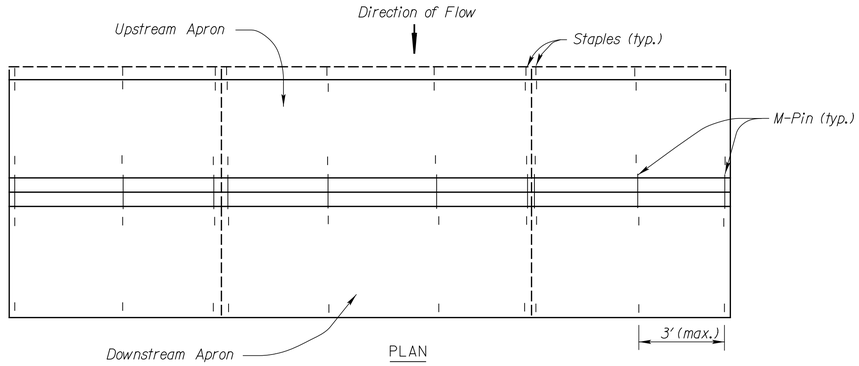

PLAN

GEO-RIDGE PERMEABLE BERM NOTES

1. Overlap Geo-ridge Berm sections and apron material by 6".
2. Use M-Pins supplied by manufacturer to secure geo-ridge Berm sections.
3. Use as many Geo-ridge Berm sections as necessary to insure water does not flow around end of ditch check.
4. Use silt fence material as the apron to prevent scour above and below the ditch check.
5. Wire Staples shall be 6" long by 1" wide, minimum.

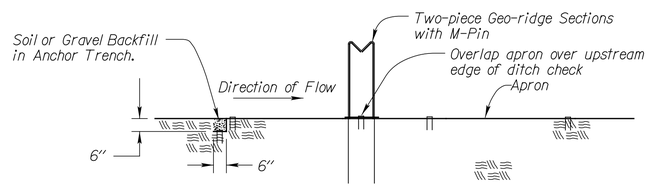

SECTION C - C

ROCK DITCH CHECK NOTES

1. Rock shall be clean aggregate, D50 = 6".
2. Place rock in such manner that water will flow over, not around ditch check.
3. Do not use rock ditch checks in clear zone.
4. Excavation: The ditch area shall be reshaped to fill any eroded areas. Prior to placement of the rock, the ditch shall be excavated to the dimensions of the Rock Ditch Check and to a minimum depth of 6" (150mm). After placement of the rock, backfill and compact any over excavated soil to ditch grade. This work shall be subsidiary to the bid item Temporary Ditch Check (Rock).
5. Aggregate excavated on site may be used as an alternate to the 6" rock, if approved by the Engineer.
6. The Engineer may approve the use of larger aggregates when conditions warrant their use.

TEMPORARY ROCK DITCH CHECK SPACING	
DITCH ℄ SLOPE (%)	SPACING INTERVAL (FEET)
5.0	60
6.0	50
7.0	43
8.0	36
9.0	33
10.0	29
NOTE: Use this spacing only for Rock Ditch Checks.	

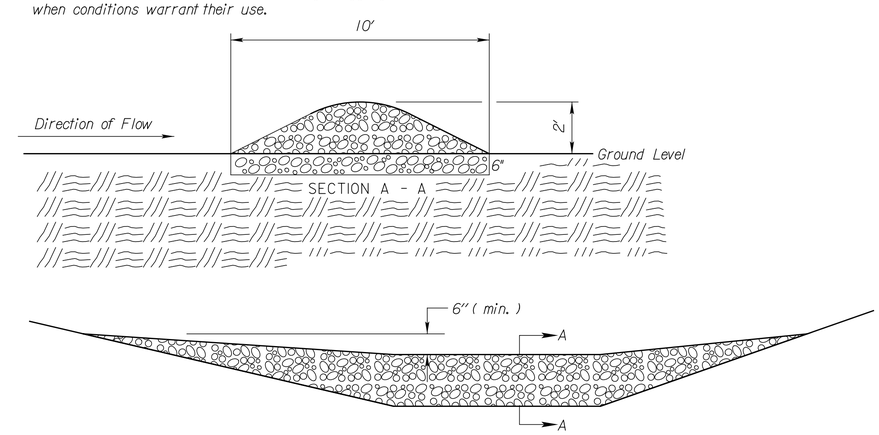

TYPICAL ELEVATION

ROCK DITCH CHECK

NO SCALE

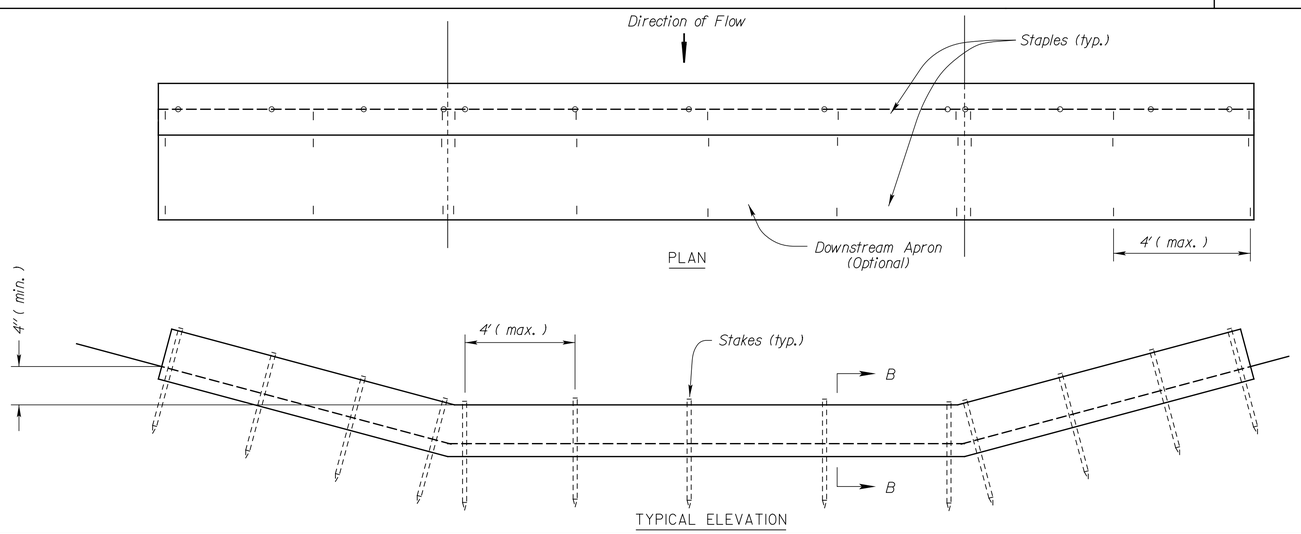

PLAN

TYPICAL ELEVATION

BIODEGRADABLE LOG DIKE NOTES

1. Use as many biodegradable log sections as necessary to ensure water does not flow around end of ditch check.

2. Overlap sections a minimum of 18"

3. Stakes shall be wood or steel according to section 2114 of the standard specifications. Length of stakes shall be a minimum of 2 x the diameter of the log.

4. Use Erosion Control (class 1) (type C) as the downstream apron when required.

5. Use 9" diameter logs when used with Erosion Control (class 2) (any type) channel lining.

6. A downstream apron is required when directed by the Engineer. Apron material will be paid at the contract unit price

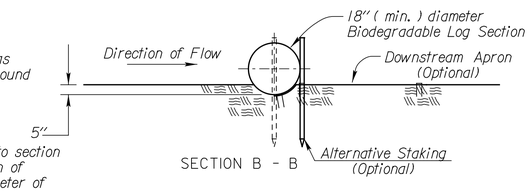

SECTION B - B

BIODEGRADABLE LOG DITCH CHECK
OR Filter Sock Ditch Check

NO SCALE

NO.	DATE	REVISIONS	BY	APP'D
3	10/21/15	Revised Standard	RAA	SHS
2	9/15/14	Revised Standard	RAA	SHS
1	9/01/10	Revised Standard	MRM	SHS

KANSAS DEPARTMENT OF TRANSPORTATION
TEMPORARY EROSION AND POLLUTION CONTROL
ROCK DITCH CHECKS
BIODEGRADABLE LOG DITCH CHECKS
GEO-RIDGE PERMEABLE BERM DITCH CHECKS
LA852G

FHWA APPROVAL		9/15/2014	APP'D	Scott H. Shields	
DESIGNED	RAA	DETAILED	RAA	QUANTITIES	CADD RAA
DESIGN CK.	SHS	DETAIL CK.	SHS	QUAN.CK.	CADD CK. RAA

NO.	DATE	REVISIONS	BY	APP'D
5				
4				
3				
2				
1				

Designed By: PRP
Drawn By: JCK/JAA
Checked By: HDL
Issue Date: SEPT. 2016

COPYRIGHT © -2016-SHAFER, KLINE & WARREN INC.

SHAFER, KLINE & WARREN
11250 Corporate Avenue
Lenexa, KS 66219-1392
913.888.7800 FAX: 913.888.7868
SURVEYING | ENGINEERING | CONSTRUCTION

CLEAR CREEK PARKWAY
CITY OF SHAWNEE, KANSAS

EROSION CONTROL DETAILS (2)

150561-010

SHEET NO.
119 OF 182

LAYOUT: MODEL | BY: jadams | DATE: 20-SEP-2016 10:35:14 AM
L:\150561-010_Cad\Civil\Erosion Control\150561-010_EC-DET-02.dgn

NOT FOR CONSTRUCTION

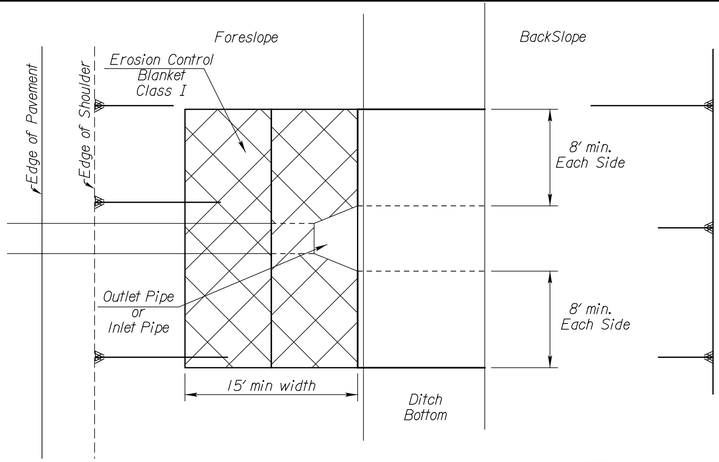

PARTIAL PLAN PIPE

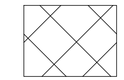

Limits of Erosion Control Blanket

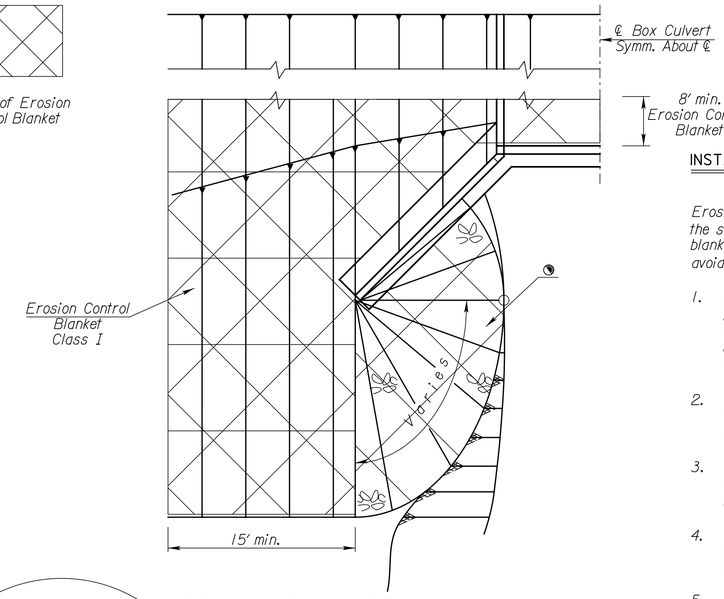

PARTIAL PLAN BOX CULVERT

INSTALLATION DETAILS FOR EROSION CONTROL CLASS I

Erosion Control Blankets shall be laid loosely in the direction of the slope, beginning at the bottom of the slope. In order for blanket to be in contact with the soil, lay blanket loosely, avoiding stretching.

1. ANCHOR SLOTS: The top of the blanket should be "slotted in" at the top of the slope and anchored in place with anchors 6 inches apart. The slots should be 6 inches wide x 6 inches deep with the blanket anchored in the bottom of the slot, then backfilled, tamped and seeded.
2. LONGITUDINAL SEAMS: The edges of the blanket should overlap each other a minimum of 6 inches, with anchors catching the edges of both blankets.
3. SPLICE SEAM: When splices are necessary, overlap end a minimum of 8 inches in direction of water flow. Stagger splice seams.
4. TERMINAL FOLD: The bottom edge of the blanket shall be turned under a minimum of 4 inches, then anchored in place with anchors 9 inches apart.
5. TYPICAL ANCHORS: Anchor design shall be as recommended by the manufacturer.
6. STAPLE CHECK: †Establish Staples in 2 rows 4" on center apart. Staple Checks - shall be 30' apart.

◔ Erosion Control Class I may be omitted if the area is immediately covered by permanent slope protection (where directed by the plans).

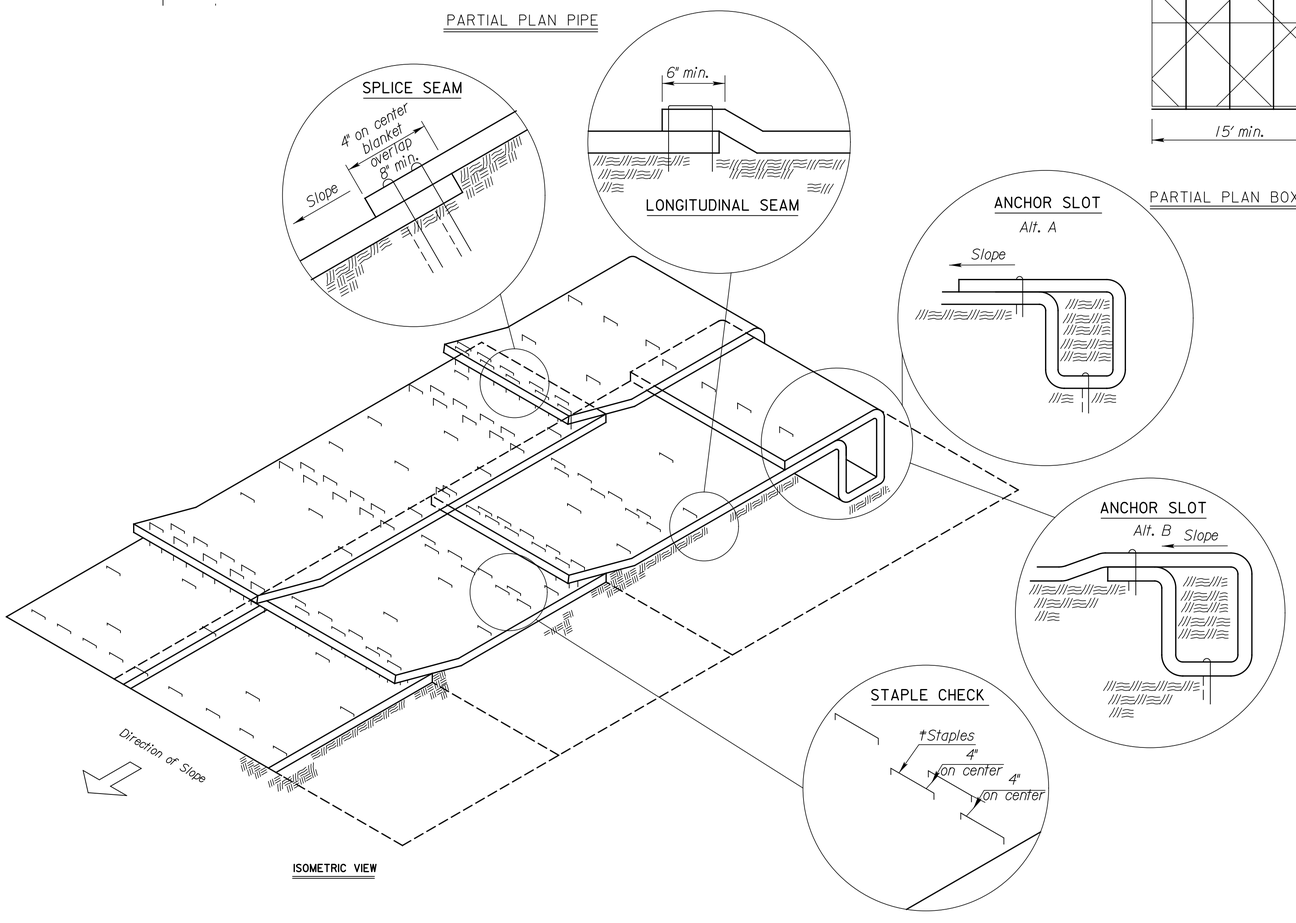

ISOMETRIC VIEW

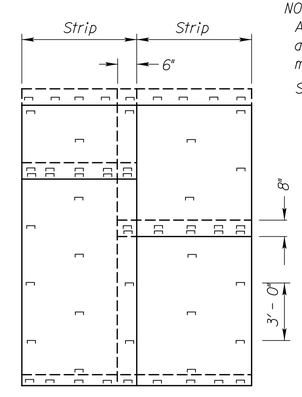

PLAN VIEW - ANCHORING DIAGRAM

NOTE:
Agricultural products, such as native prairie hay, used for mulching and erosion control practices, excluding wood based mulch, shall meet the North American Weed Free Forage Standards.

Single post ring and shank staple is acceptable.

NO.	DATE	REVISIONS	BY	APP'D
4	3/01/15	Revised Standard	RAA	SHS
3	2/23/15	Revised Standard	RAA	SHS
2	9/15/14	Revised Standard	MRM	SHS
1	9/10/07	Revised Standard	MRM	SHS

KANSAS DEPARTMENT OF TRANSPORTATION

INSTALLATION DETAIL
EROSION CONTROL CLASS I
SLOPE PROTECTION

LA855

FHWA APPROVAL		3/10/2015	APP'D	Scott H. Shields	
DESIGNED	RAA	DETAILED	RAA	QUANTITIES	CADD RAA
DESIGN CK.		DETAIL CK.		QUAN.CK.	CADD CK. RAA

REV.	DATE	REVISIONS	BY	APP'D
5				
4				
3				
2				
1				

Designed By: PRP
Drawn By: JCK/JAA
Checked By: HDL
Issue Date: SEPT. 2016

COPYRIGHT © -2016-SHAFER, KLINE & WARREN INC.

SHAFER, KLINE & WARREN
11250 Corporate Avenue
Lenexa, KS 66219-1392
913.888.7800 FAX: 913.888.7868
SURVEYING | ENGINEERING | CONSTRUCTION

CLEAR CREEK PARKWAY
CITY OF SHAWNEE, KANSAS

EROSION CONTROL DETAILS (3)

150561-010

LAYOUT: MODEL | BY: jadams | DATE: 20-SEP-2016 10:35:16 AM
L:\150561-010_Cad\Civil\Erosion Control\150561-010_EC-DET-03.dgn

NOT FOR CONSTRUCTION

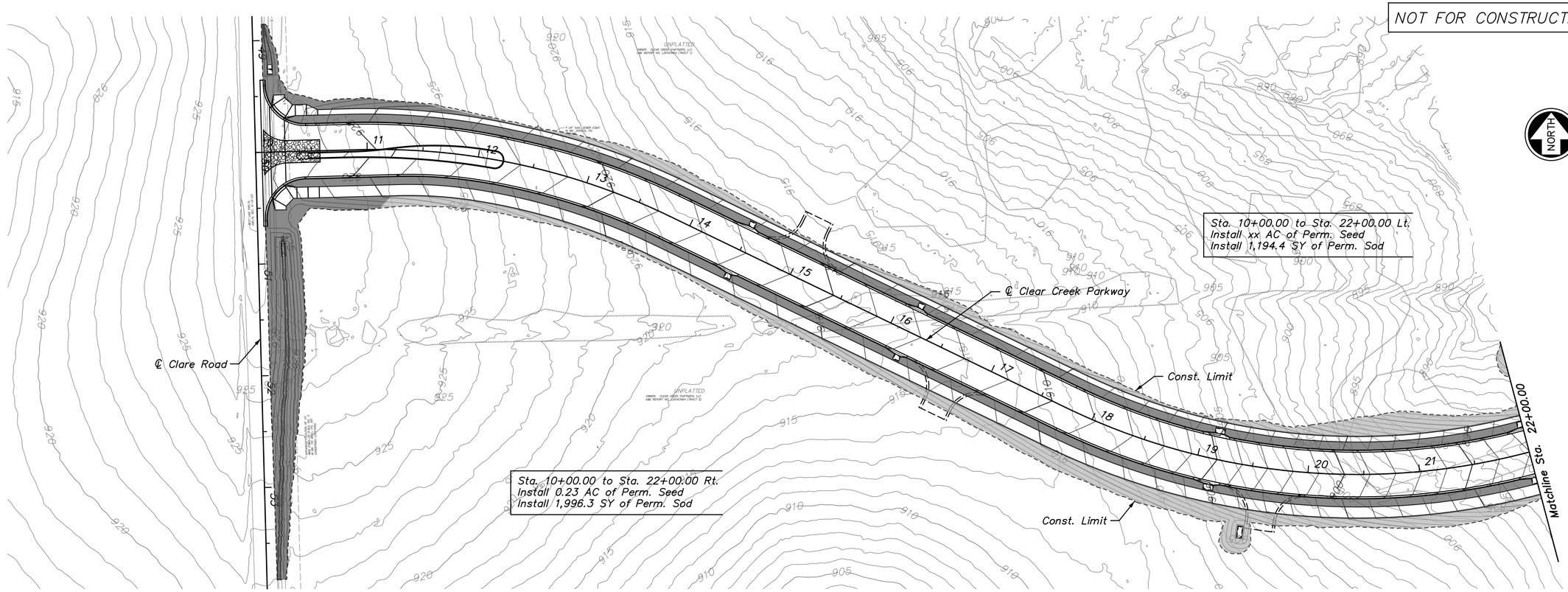

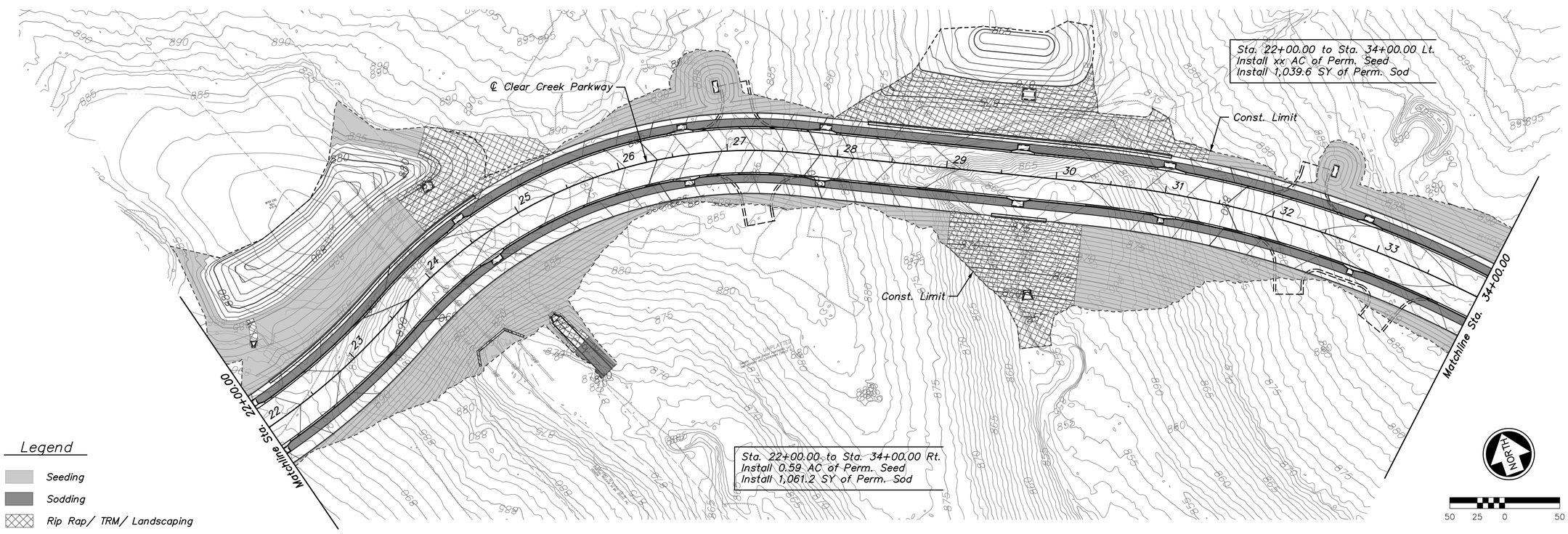

Legend

- Seeding
- Sodding
- Rip Rap/ TRM/ Landscaping

REV.	DATE	REVISIONS	BY	APP'D
1				
2				
3				
4				
5				

Designed By: PRP
Drawn By: JCK/JAA
Checked By: HDL
Issue Date: SEPT. 2016

COPYRIGHT © -2016-SHAFER, KLINE & WARREN INC.

SHAFER, KLINE & WARREN
11250 Corporate Avenue
Lenexa, KS 66219-1392
913.888.7800 FAX: 913.888.7868
SURVEYING | ENGINEERING | CONSTRUCTION

CLEAR CREEK PARKWAY
CITY OF SHAWNEE, KANSAS

SEEDING & SODDING PLAN (1)
STA. 10+00.00 TO STA. 34+00.00

150561-010

SHEET NO.
121 OF 182

LAYOUT: MODEL | BY: jadams | DATE: 20-SEP-2016 10:35:23 AM
L:\150561-010_Cad\Civil\Seeding And Sodding\150561-010_SS-01.dgn

NOT FOR CONSTRUCTION

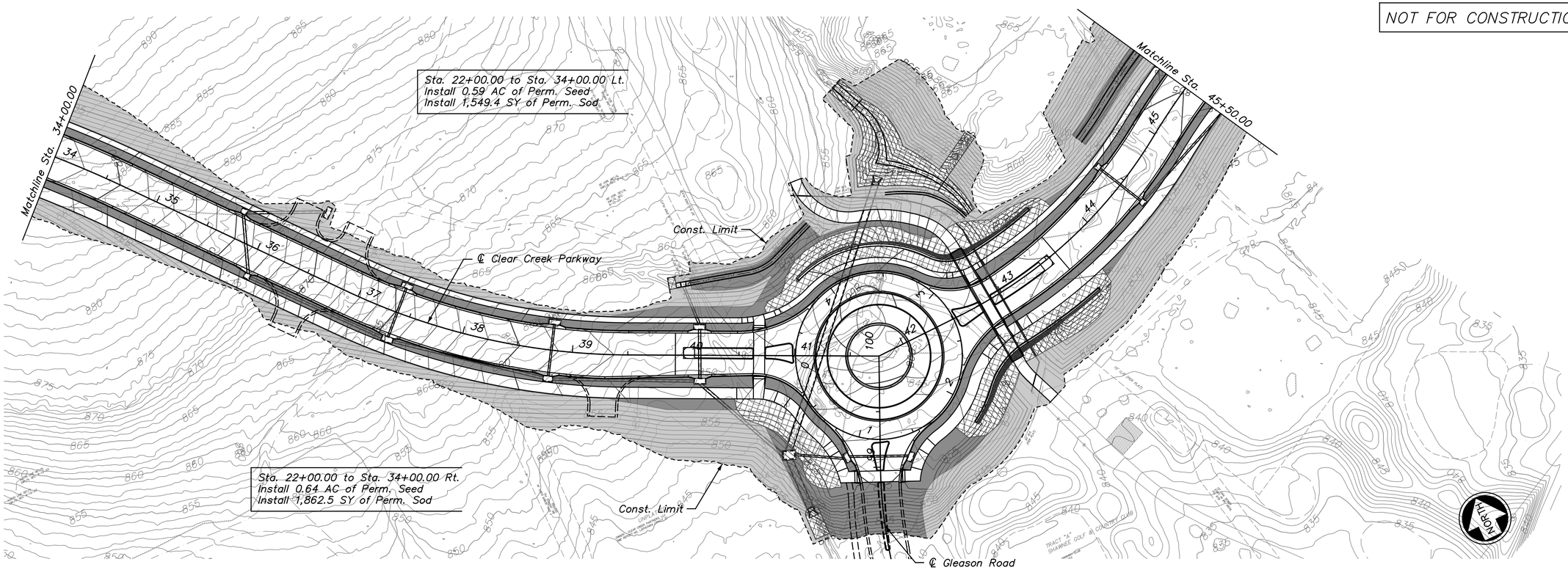

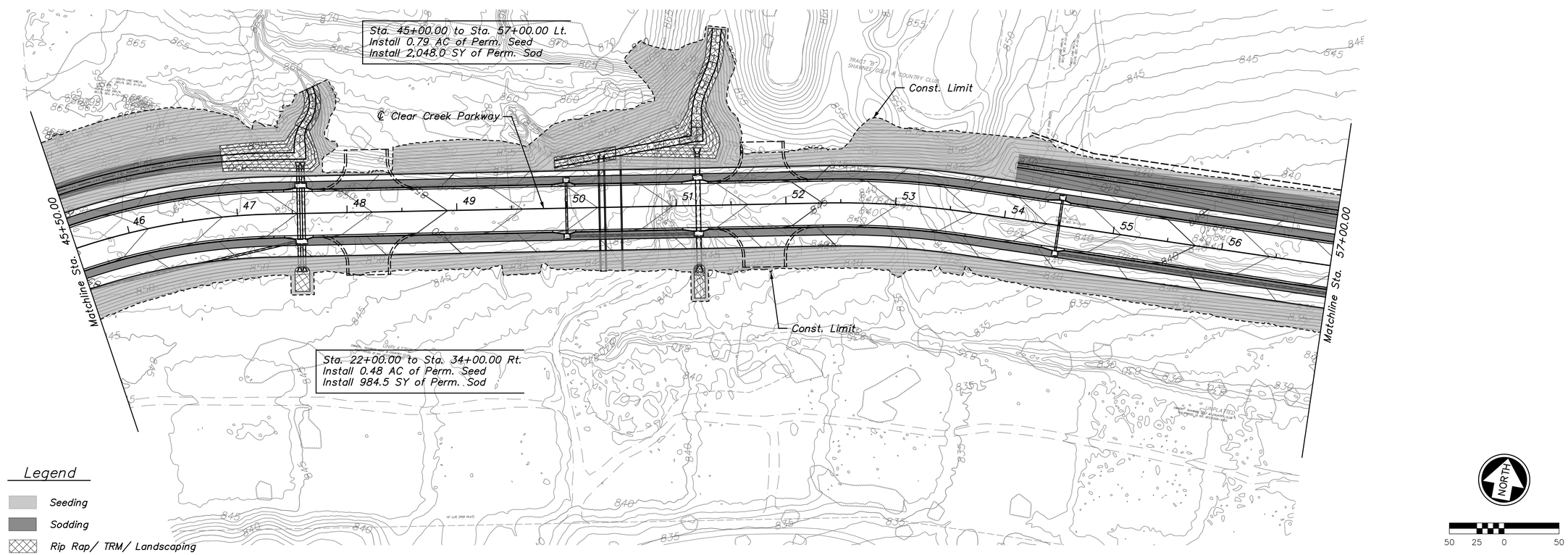

Legend

- Seeding
- Sodding
- Rip Rap/ TRM/ Landscaping

REV.	DATE	REVISIONS	BY	APP'D
1				
2				
3				
4				
5				

Designed By: PRP
Drawn By: JCK/JAA
Checked By: HDL
Issue Date: SEPT. 2016

COPYRIGHT © -2016-SHAFER, KLINE & WARREN INC.

SHAFER, KLINE & WARREN
11250 Corporate Avenue
Lenexa, KS 66219-1392
913.888.7800 FAX: 913.888.7868
SURVEYING | ENGINEERING | CONSTRUCTION

CLEAR CREEK PARKWAY
CITY OF SHAWNEE, KANSAS

SEEDING & SODDING PLAN (2)
STA. 34+00.00 TO STA. 57+00.00

150561-010

LAYOUT: MODEL | BY: jadams | DATE: 20-SEP-2016 10:35:29 AM
L:\150561-010_Cad\Civil\Seeding And Sodding\150561-010_SS-02.dgn

NOT FOR CONSTRUCTION

Sta. 57+00.00 to Sta. 61+50.00 Lt.
Install 0.19 AC of Perm. Seed
Install 1,013.1 SY of Perm. Sod

Sta. 57+00.00 to Sta. 61+50.00 Rt.
Install 0.19 AC of Perm. Seed
Install 876.3 SY of Perm. Sod

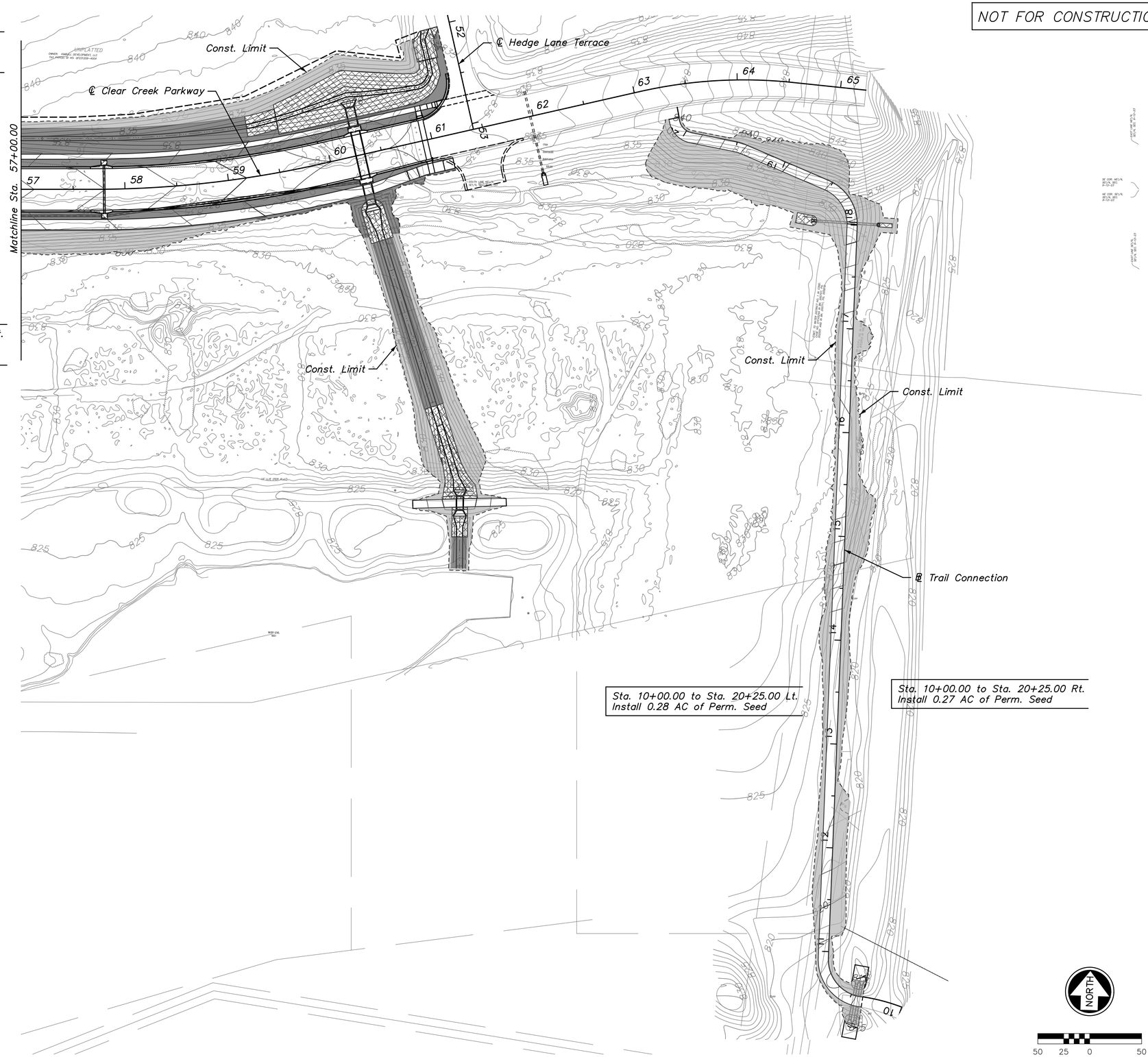

Legend

- Seeding
- Sodding
- Rip Rap/ TRM/ Landscaping

REV.	DATE	REVISIONS	BY	APP'D
1				
2				
3				
4				
5				

Designed By: PRP
Drawn By: JCK/JAA
Checked By: HDL
Issue Date: SEPT. 2016

COPYRIGHT © -2016-SHAFER, KLINE & WARREN INC.

SHAFER, KLINE & WARREN
11250 Corporate Avenue
Lenexa, KS 66219-1392
913.888.7800 FAX: 913.888.7868
SURVEYING | ENGINEERING | CONSTRUCTION

CLEAR CREEK PARKWAY
CITY OF SHAWNEE, KANSAS

SEEDING & SODDING PLAN (3)
STA. 57+00.00 TO STA. 61+50.00

150561-010

SHEET NO.
123 OF 182

LAYOUT: MODEL | BY: jadams | DATE: 20-SEP-2016 10:35:37 AM
L:\150561-010_Cad\Civil\Seeding And Sodding\150561-010_SS-03.dgn

NOT FOR CONSTRUCTION

CLEAR CREEK PARKWAY
CITY OF SHAWNEE, KANSAS

SUMMARY OF QUANTITIES (1)

SHAFER, KLINE & WARREN
11250 Corporate Avenue
Lenexa, KS 66219-1392
913.888.7800 FAX: 913.888.7868
SURVEYING | ENGINEERING | CONSTRUCTION

Designed By: PRP
Drawn By: JCK/JAA
Checked By: HDL
Issue Date: SEPT. 2016

REV.	DATE	REVISIONS	BY	APP'D
5				
4				
3				
2				
1				

COPYRIGHT © -2016-SHAFER, KLINE & WARREN INC.

NOT FOR CONSTRUCTION

CLEAR CREEK PARKWAY
CITY OF SHAWNEE, KANSAS

SUMMARY OF QUANTITIES (2)

SHAFER, KLINE & WARREN
11250 Corporate Avenue
Lenexa, KS 66219-1392
913.888.7800 FAX: 913.888.7868
SURVEYING | ENGINEERING | CONSTRUCTION

Designed By: PRP
Drawn By: JCK/JAA
Checked By: HDL
Issue Date: SEPT. 2016

REV.	DATE	REVISIONS	BY	APP'D
5				
4				
3				
2				
1				

COPYRIGHT © -2016-SHAFER, KLINE & WARREN INC.

NOT FOR CONSTRUCTION

Summary Of Storm Drainage Quantities

Line Number #	Structure Number #	Type #	Structure Information: Roadway Location: Station stations	Offset (Location Point) feet	Side text	Name text	Structure Quantities: Curb Inlets: 5' x 4' each	5' x 4.5' each	8' x 4' each	8' x 4.5' each	8' x 5' each	10' x 4' each	10' x 4' (Special) each	10' x 4.5' each	10' x 4.5' (Special) each	12' x 4' each	Area Inlets: 4' x 4' (Shallow) each	4' x 4' each	Pond Outlet Structures: 8' x 6' each	10' x 9' each	Junction Boxes: 10' x 7' (Special) each	Comments text
1	102	Area Inlet	49+28.11	14.69	Lt	Clare Road											1					Exception-Shallow Area Inlet
1	101	End Section	50+81.89	22.39	Lt	Clare Road																
2	210	Curb Inlet	16+18.00	25.50	Lt	Clear Creek Pkwy	1															
2	209	Curb Inlet	19+48.01	60.07	Rt	Clear Creek Pkwy						1										
2	208	Curb Inlet	19+15.00	25.50	Lt	Clear Creek Pkwy			1													
2	207	Curb Inlet	14+50.00	25.50	Lt	Clear Creek Pkwy	1															
2	206	Curb Inlet	14+50.00	25.50	Rt	Clear Creek Pkwy	1															
2	205	Curb Inlet	16+18.00	25.50	Rt	Clear Creek Pkwy	1															
2	204	Curb Inlet	19+15.00	25.75	Rt	Clear Creek Pkwy				1												
2	203	Curb Inlet	22+00.00	26.00	Rt	Clear Creek Pkwy					1											
2	202	Curb Inlet	22+00.00	26.00	Lt	Clear Creek Pkwy					1											
2	201	End Section	22+45.36	80.12	Lt	Clear Creek Pkwy																
3	304	Outlet Control Structure	24+48.33	65.55	Lt	Clear Creek Pkwy													1			Canyon Lakes Outlet Control Structure, Rotate 11° Rt. <Special Structure Design Req.
3	303	Curb Inlet	24+52.66	25.50	Lt	Clear Creek Pkwy							1									Special Structure Design Required
3	302	Curb Inlet	24+59.73	25.50	Rt	Clear Creek Pkwy							1									Special Structure Design Required
3	301	End Section	24+76.05	101.03	Rt	Clear Creek Pkwy																
4	411	Curb Inlet	31+00.00	25.50	Lt	Clear Creek Pkwy						1										
4	410	Curb Inlet	31+00.00	25.50	Rt	Clear Creek Pkwy	1															
4	409	Curb Inlet	27+87.00	25.50	Lt	Clear Creek Pkwy						1										
4	408	Curb Inlet	26+93.18	59.02	Lt	Clear Creek Pkwy						1										
4	407	Curb Inlet	26+62.00	25.50	Lt	Clear Creek Pkwy			1													
4	406	Curb Inlet	26+62.00	25.50	Rt	Clear Creek Pkwy			1													
4	405	Curb Inlet	27+87.00	25.75	Rt	Clear Creek Pkwy				1												
4	404	Outlet Control Structure	29+67.62	73.95	Lt	Clear Creek Pkwy														1		Canyon Lakes Outlet Control Structure, Special Structure Design Req.
4	403	Curb Inlet	29+67.62	25.50	Lt	Clear Creek Pkwy							1									Special Structure Design Required
4	402	Curb Inlet	29+67.62	25.75	Rt	Clear Creek Pkwy									1							Special Structure Design Required
4	401	End Section	29+90.12	133.36	Rt	Clear Creek Pkwy																
5	506	Curb Inlet	32+41.37	56.43	Lt	Clear Creek Pkwy						1										
5	505	Curb Inlet	32+83.19	25.50	Lt	Clear Creek Pkwy			1													
5	504	Curb Inlet	32+83.19	25.50	Rt	Clear Creek Pkwy	1															
6	619	Curb Inlet	99+09.21	27.26	Rt	Gleason Road			1													
6	618	Curb Inlet	99+10.13	29.87	Lt	Gleason Road			1													
6	613	Curb Inlet	36+43.43	56.59	Lt	Clear Creek Pkwy						1										
6	612	Curb Inlet	37+38.00	25.50	Lt	Clear Creek Pkwy						1										
6	611	Curb Inlet	38+81.00	25.50	Lt	Clear Creek Pkwy						1										
6	610	Curb Inlet	35+75.00	25.75	Lt	Clear Creek Pkwy		1														
6	609	Curb Inlet	36+02.00	25.75	Rt	Clear Creek Pkwy		1														
6	608	Curb Inlet	37+38.00	25.75	Rt	Clear Creek Pkwy								1								
6	607	Curb Inlet	38+81.00	25.75	Rt	Clear Creek Pkwy				1												
6	606	Area Inlet	39+99.55	63.86	Lt	Clear Creek Pkwy												1				2 Openings W & E, Rotate 10.50° Lt
6	605	Curb Inlet	40+14.37	25.50	Lt	Clear Creek Pkwy						1										
6	604	Curb Inlet	40+14.91	23.18	Rt	Clear Creek Pkwy								1								
6	603	End Section	42+47.44	145.43	Lt	Clear Creek Pkwy																
6	602	Junction Box	40+95.28	89.36	Rt	Clear Creek Pkwy															1	Rotate 4.5° Lt, Special Structure Design Required
6	601	End Section	98+48.12	57.72	Lt	Gleason Road																
7	706	Curb Inlet	44+45.00	25.50	Lt	Clear Creek Pkwy	1															
7	705	Curb Inlet	44+45.00	25.50	Rt	Clear Creek Pkwy	1															
7	704	End Section	47+58.07	46.56	Lt	Clear Creek Pkwy																
7	703	Curb Inlet	47+58.07	25.50	Lt	Clear Creek Pkwy						1										
7	702	Curb Inlet	47+58.07	25.50	Rt	Clear Creek Pkwy						1										
7	701	End Section	47+58.07	56.20	Rt	Clear Creek Pkwy																
8	806	Curb Inlet	50+00.00	25.50	Lt	Clear Creek Pkwy	1															
8	805	Curb Inlet	50+00.00	25.50	Rt	Clear Creek Pkwy	1															
8	804	End Section	51+20.00	58.56	Lt	Clear Creek Pkwy																
8	803	Curb Inlet	51+20.00	25.50	Lt	Clear Creek Pkwy			1													
8	802	Curb Inlet	51+20.00	25.50	Rt	Clear Creek Pkwy			1													
8	801	End Section	51+20.00	66.45	Rt	Clear Creek Pkwy																
9	908	Curb Inlet	54+50.00	25.50	Lt	Clear Creek Pkwy	1															
9	907	Curb Inlet	54+50.00	25.50	Rt	Clear Creek Pkwy	1															
9	906	Curb Inlet	57+80.00	25.50	Lt	Clear Creek Pkwy	1															
9	905	Curb Inlet	57+80.00	25.50	Rt	Clear Creek Pkwy	1															
9	904	30" Wingwalls & Apron	60+29.54	51.38	Lt	Clear Creek Pkwy																Special 30" Wingwalls & Apron Design Required
9	903	Curb Inlet	60+29.54	25.50	Lt	Clear Creek Pkwy										1						
9	902	Curb Inlet	60+29.54	25.50	Rt	Clear Creek Pkwy										1						
9	901	30" Wingwalls & Apron	60+29.54	54.89	Rt	Clear Creek Pkwy																Special 30" Wingwalls & Apron Design Required
9	900B	30" Wingwalls & Apron	+45.77	16.64	Lt	South Cart Path																Special 30" Wingwalls & Apron Design Required
9	900A	30" Wingwalls & Apron	+44.93	8.64	Rt	South Cart Path																Special 30" Wingwalls & Apron Design Required
10	1000B	End Section	18+45.55	42.05	Lt	Recreational Trail																
10	1000A	End Section	18+00.45	24.40	Rt	Recreational Trail																
						Totals	14	2	8	3	2	11	3	2	1	2	1	1	1	1	1	

Line Number #	Structure Number #	Pipe Quantities: PVC Pipes: 4" (Solid) (Dam Diaphrams) feet	4" (Slotted) (Dam Diaphram & Edge/Toe Drains) feet	Reinforced Concrete Pipes (RCP) Class III: 15" RCP feet	18" RCP feet	21" RCP feet	24" RCP feet	30" RCP feet	42" RCP feet	54" RCP feet	72" RCP feet	Flared End Sections (FES) With Toewalls Quantities: Reinforced Concrete (RC) Class III: 15" each	18" each	24" each	30" each	42" each	54" each	72" each	Box Culvert Quantities: Boxes: 6' x 3' RCB feet	8' x 3' RCB feet	Wingwalls: 6' x3' RCB 30° Wingwalls with Aprons each	8' x3' RCB 30° Wingwalls with Aprons each
1	102			144																		
1	101											1										
2	210			47																		
2	209			47																		
2	208			47																		
2	207			47																		
2	206				163																	
2	205				296																	
2	204					287																
2	203							47														
2	202							49														
2	201															1						
3	304	207	289							36												
3	303									48												
3	302									59												
3	301																1					
4	411			47																		
4	410				124																	
4	409			47																		
4	408				46																	
4	407				47																	
4	406				111																	
4	405					172																
4	404	163	329								42											
4	403										47											
4	402										78											
4	401																1					
5	506				51																	
5	505				47																	
5	504				174																	
6	619			54																		
6	618			46																		
6	613					71																
6	612			47																		
6	611			47																		
6	610				55																	
6	609				131																	
6	608				140																	
6	607				128																	
6	606				38																	
6	605					45																
6	604						100															
6	603																					
6	602																					
6	601																					
7	706			47																		
7	705			297																		
7	704						40						2									
7	703						94															
7	702						40															
7	701						12						2									
8	806			47																		
8	805			114																		
8	804																1					
8	803								47													
8	802								25													
8	801																1					
9	908			47																		
9	907			326																		
9	906			47																		
9	905					246																
9	904																			24		1
9	903																			47		
9	902																			23		
9	901																					1
9	900B																		13		1	
9	900A																				1	
10	1000B				60								1									
10	1000A												1									
		370	618	1545	1157	1275	286	96	72	143	167	1	2	4	1	2	1	1	13	94	2	2

Notes:

1. Information for Canyon Lakes future storm structures was obtained from coordination plans provided by Phelps Engineering, Inc. (PEI).
2. Canyon Lakes future structures were included in the analysis to assess and plan for the future impacts to Clear Creek Parkway's drainage system.
3. Lengths of pipe shown on the plans, profiles and calculations sheets are based on lineal feet measurements along pipe centerline from the structure inside face to structure inside face.
4. Lengths of pipe shown on the Summary Of Storm Drainage Quantities and Quantity Recapitulation sheets are based on lineal feet measurements along pipe centerline from the structure insice face to structure inside face rounded up to the nearest foot.

REV.	DATE	REVISIONS	BY	APP'D
5				
4				
3				
2				
1				

COPYRIGHT © -2016-SHAFER, KLINE & WARREN INC.

Designed By: PRP
Drawn By: JCK/JAA
Checked By: HDL
Issue Date: SEPT. 2016

SHAFER, KLINE & WARREN
11250 Corporate Avenue
Lenexa, KS 66219-1392
913.888.7800 FAX: 913.888.7868
SURVEYING | ENGINEERING | CONSTRUCTION

CLEAR CREEK PARKWAY
CITY OF SHAWNEE, KANSAS

SCHEDULE OF INLETS AND MANHOLES

150561-010

LAYOUT: MODEL | BY: jadams | DATE: 20-SEP-2016 10:35:44 AM
L:\150561-010_Cad\Civil\Summary of Quantities\150561-010_SCH-INL-MH-01.dgn

LAYOUT: MODEL | BY: jadams | DATE: 20-SEP-2016 10:35:57 AM
L:\150561-010_Cad\Civil\Drainage Map And Calcs\150561-010_DRAIN-MAP-01.dgn

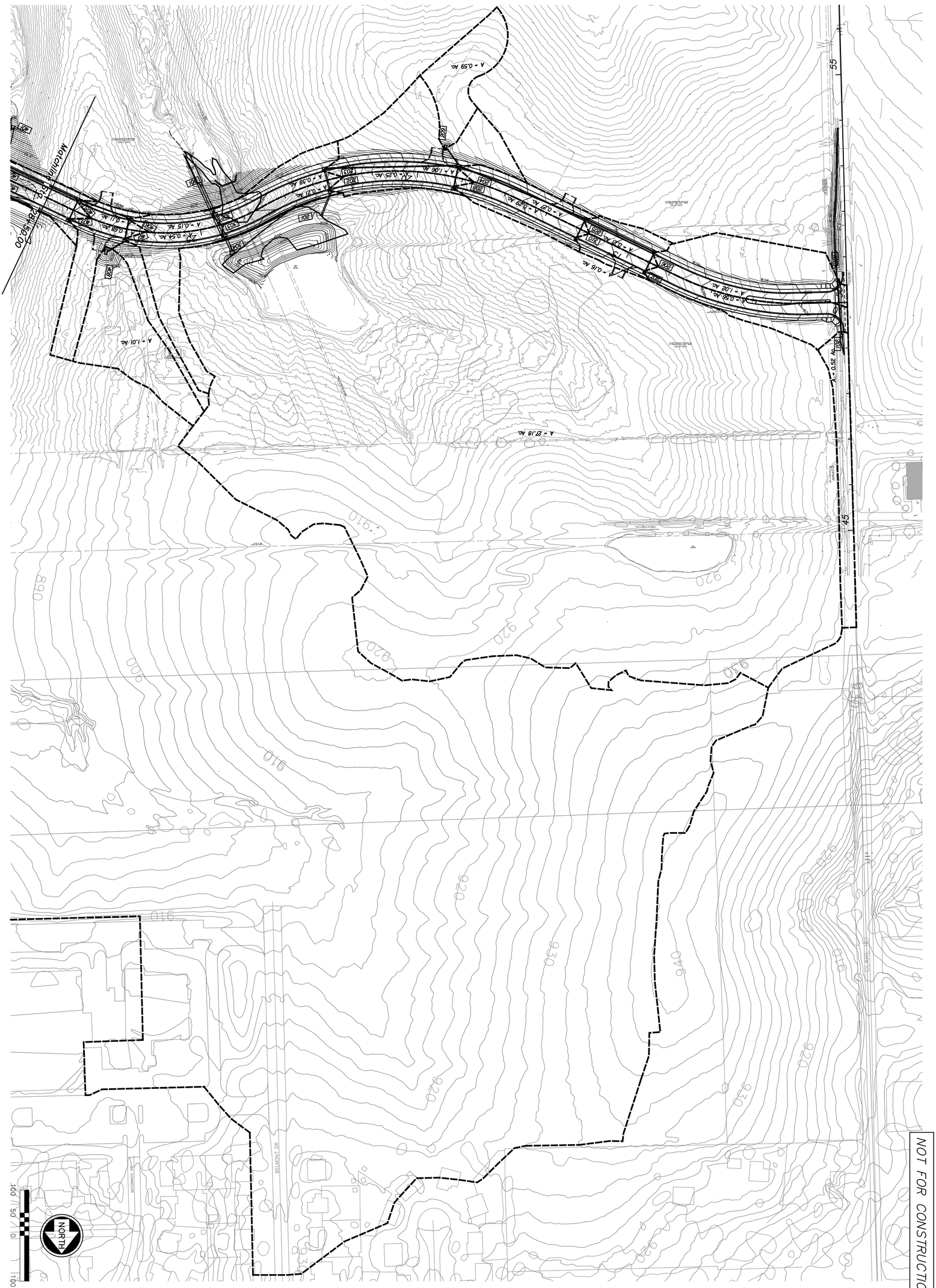

CLEAR CREEK PARKWAY
CITY OF SHAWNEE, KANSAS

DRAINAGE AREA MAP (1)

SHAFER, KLINE & WARREN
11250 Corporate Avenue
Lenexa, KS 66219-1392
913.888.7800 FAX: 913.888.7868
SURVEYING | ENGINEERING | CONSTRUCTION

Designed By: PRP
Drawn By: JCK/JAA
Checked By: HDL
Issue Date: SEPT. 2016

REV.	DATE	REVISIONS	BY	APP'D
5				
4				
3				
2				
1				

COPYRIGHT © -2016-SHAFER, KLINE & WARREN INC.

150561-010
SHEET NO. 127 OF 182

LAYOUT: MODEL | BY: jadams | DATE: 20-SEP-2016 10:36:04 AM
L:\150561-010_Cad\Civil\Drainage Map And Calcs\150561-010_DRAIN-MAP-02.dgn

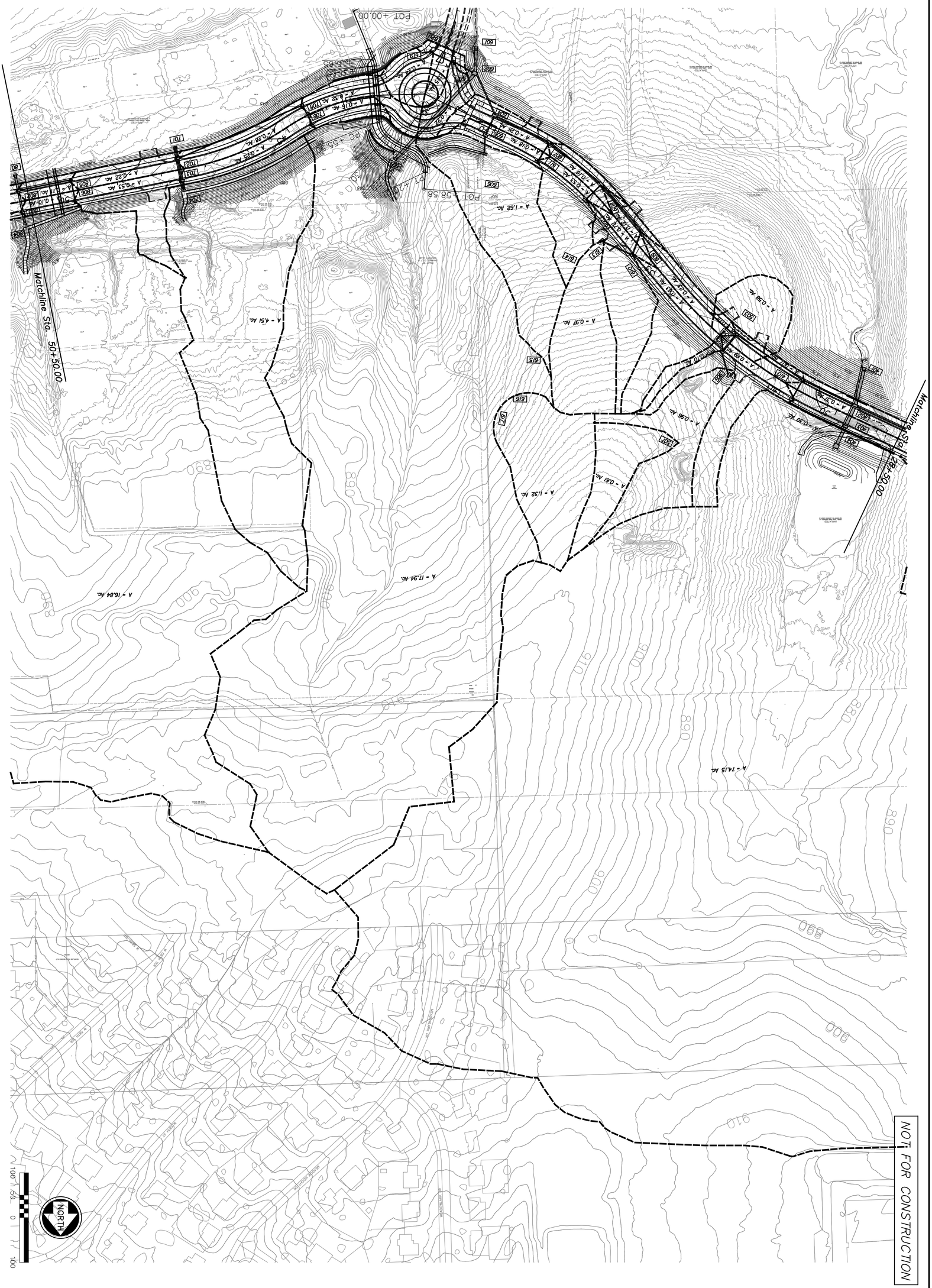

SHEET NO. 128 OF 182	150561-010	CLEAR CREEK PARKWAY CITY OF SHAWNEE, KANSAS DRAINAGE AREA MAP (2)	**SHAFER, KLINE & WARREN** 11250 Corporate Avenue Lenexa, KS 66219-1392 913.888.7800 FAX: 913.888.7868 SURVEYING | ENGINEERING | CONSTRUCTION

Designed By: PRP
Drawn By: JCK/JAA
Checked By: HDL
Issue Date: SEPT. 2016

REV.	DATE	REVISIONS	BY	APP'D
5				
4				
3				
2				
1				

COPYRIGHT © -2016-SHAFER, KLINE & WARREN INC.

LAYOUT: MODEL | BY: jadams | DATE: 20-SEP-2016 10:36:13 AM
L:\150561-010_Cad\Civil\Drainage Map And Calcs\150561-010_DRAIN-MAP-03.dgn

SHEET NO. 129 OF 182	150561-010	CLEAR CREEK PARKWAY CITY OF SHAWNEE, KANSAS	DRAINAGE AREA MAP (3)

SHAFER, KLINE & WARREN
11250 Corporate Avenue
Lenexa, KS 66219-1392
913.888.7800 FAX: 913.888.7868
SURVEYING | ENGINEERING | CONSTRUCTION

Designed By: PRP
Drawn By: JCK/JAA
Checked By: HDL
Issue Date: SEPT. 2016

REV.	DATE	REVISIONS	BY	APP'D
5				
4				
3				
2				
1				

COPYRIGHT © -2016-SHAFER, KLINE & WARREN INC.

NOT FOR CONSTRUCTION

Travel Time and Inlet Flow Calculations - Table I

Structure Information / Overland Flow (Paved or Unpaved Sheet Flow; Unpaved Shallow Concentrated Flow (if applicable))

Line Number LN #	Structure Number SN #	Area A acres	Runoff Coefficient C #	Type SNtype #	Roadway Location: Station SNs stations	Offset (Location Point) Snoc feet	Side SNsd text	Name Sname text	Sheet Flow Elevations: Upper Zsfu feet	Lower Zsfl feet	Difference DZsf feet	Length (100' max) Lsf feet	Slope Ssf %	Travel Time Tsf minutes	Unpaved Shallow Conc. Elevations: Upper Zscu feet	Lower Zscl feet	Difference DZsc feet	Length Lsc feet	Slope Ssc %	Travel Time Tsc minutes
1	102	0.52	0.50	Area Inlet	49+28.11	14.69	Lt	Clare Road	935.00	934.20	0.80	26.56	3.01	1.00	934.20	926.43	7.77	626.38	1.24	3.25
1	101	0.00		End Section	50+81.89	22.39	Lt	Clare Road	#N/A	#N/A	#N/A	#N/A	#N/A		#N/A	#N/A	#N/A	#N/A	#N/A	
2	210	0.16	0.76	Curb Inlet	16+18.00	25.50	Lt	Clear Creek Pkwy	917.76	917.11	0.65	27.45	2.37	2.30	#N/A	#N/A	#N/A	#N/A	#N/A	
2	209	0.59	0.51	Curb Inlet	19+48.01	60.07	Rt	Clear Creek Pkwy	911.00	909.00	2.00	76.22	2.62	6.80	909.00	907.00	2.00	161.91	1.24	0.74
2	208	0.29	0.76	Curb Inlet	19+15.00	25.50	Lt	Clear Creek Pkwy	916.00	913.25	2.75	38.73	7.10	2.00	#N/A	#N/A	#N/A	#N/A	#N/A	
2	207	0.56	0.70	Curb Inlet	14+50.00	25.50	Lt	Clear Creek Pkwy	932.00	925.03	6.97	99.01	7.04	5.20	#N/A	#N/A	#N/A	#N/A	#N/A	
2	206	1.02	0.51	Curb Inlet	14+50.00	25.50	Rt	Clear Creek Pkwy	926.50	925.50	1.00	100.00	1.00	10.00	925.50	923.58	1.92	53.78	3.57	0.10
2	205	0.22	0.70	Curb Inlet	16+18.00	25.50	Rt	Clear Creek Pkwy	922.10	916.99	5.11	59.59	8.58	2.75	#N/A	#N/A	#N/A	#N/A	#N/A	
2	204	0.27	0.78	Curb Inlet	19+15.00	25.75	Rt	Clear Creek Pkwy	914.16	913.25	0.91	36.61	2.49	2.80	#N/A	#N/A	#N/A	#N/A	#N/A	
2	203	1.06	0.58	Curb Inlet	22+00.00	26.00	Rt	Clear Creek Pkwy	908.00	906.68	1.32	95.37	1.38	9.50	906.68	904.91	1.77	47.21	3.75	0.10
2	202	0.25	0.76	Curb Inlet	22+00.00	26.00	Lt	Clear Creek Pkwy	906.77	904.66	2.11	44.89	4.70	2.50	#N/A	#N/A	#N/A	#N/A	#N/A	
2	201	0.00		End Section	22+45.36	80.12	Lt	Clear Creek Pkwy	#N/A	#N/A	#N/A	#N/A	#N/A		#N/A	#N/A	#N/A	#N/A	#N/A	
3	304	27.18	0.60	Outlet Control Structure	24+48.33	65.55	Lt	Clear Creek Pkwy	#N/A	#N/A	#N/A	#N/A	#N/A		#N/A	#N/A	#N/A	#N/A	#N/A	
3	303	0.21	0.76	Curb Inlet	24+52.66	25.50	Lt	Clear Creek Pkwy	894.26	892.51	1.75	38.86	4.50	2.40	#N/A	#N/A	#N/A	#N/A	#N/A	
3	302	0.38	0.78	Curb Inlet	24+59.73	25.50	Rt	Clear Creek Pkwy	903.00	892.92	10.08	87.67	11.50	2.50	#N/A	#N/A	#N/A	#N/A	#N/A	
3	301	0.00		End Section	24+76.05	101.03	Rt	Clear Creek Pkwy	#N/A	#N/A	#N/A	#N/A	#N/A		#N/A	#N/A	#N/A	#N/A	#N/A	
4	411	0.69	0.54	Curb Inlet	31+00.00	25.50	Lt	Clear Creek Pkwy	896.00	893.50	2.50	100.00	2.50	8.00	893.50	875.57	17.93	264.01	6.79	
4	410	0.17	0.78	Curb Inlet	31+00.00	25.50	Rt	Clear Creek Pkwy	882.82	881.36	1.46	35.19	4.15	2.50	#N/A	#N/A	#N/A	#N/A	#N/A	
4	409	0.68	0.54	Curb Inlet	27+87.00	25.50	Lt	Clear Creek Pkwy	901.90	897.50	4.40	100.00	4.40	5.50	897.50	881.69	15.81	392.35	4.03	
4	408	1.01	0.51	Curb Inlet	26+93.18	59.02	Lt	Clear Creek Pkwy	#N/A	#N/A	#N/A	#N/A	#N/A		#N/A	#N/A	#N/A	#N/A	#N/A	
4	407	0.54	0.60	Curb Inlet	26+62.00	25.50	Lt	Clear Creek Pkwy	901.00	896.50	4.50	100.00	4.50	6.60	896.50	884.26	12.24	280.99	4.36	0.63
4	406	0.15	0.78	Curb Inlet	26+62.00	25.50	Rt	Clear Creek Pkwy	889.50	889.00	0.50	30.75	1.63	2.75	#N/A	#N/A	#N/A	#N/A	#N/A	
4	405	0.15	0.78	Curb Inlet	27+87.00	25.75	Rt	Clear Creek Pkwy	885.43	881.88	3.55	75.41	4.71	3.75	#N/A	#N/A	#N/A	#N/A	#N/A	
4	404	74.15	0.51	Outlet Control Structure	29+67.62	73.95	Lt	Clear Creek Pkwy	#N/A	#N/A	#N/A	#N/A	#N/A		#N/A	#N/A	#N/A	#N/A	#N/A	
4	403	0.30	0.76	Curb Inlet	29+67.62	25.50	Lt	Clear Creek Pkwy	881.20	876.15	5.05	74.39	6.79	4.80	#N/A	#N/A	#N/A	#N/A	#N/A	
4	402	0.31	0.78	Curb Inlet	29+67.62	25.75	Rt	Clear Creek Pkwy	879.12	876.15	2.97	57.21	5.19	4.00	#N/A	#N/A	#N/A	#N/A	#N/A	
4	401	0.00		End Section	29+90.12	133.36	Rt	Clear Creek Pkwy	#N/A	#N/A	#N/A	#N/A	#N/A		#N/A	#N/A	#N/A	#N/A	#N/A	
5	507	0.61	0.51	Curb Inlet	+52.00	19.50	Lt	59th Place	908.50	904.00	4.50	90.83	4.95	6.00	904.00	892.00	12.00	290.20	4.14	0.50
5	506	0.96	0.51	Curb Inlet	32+41.37	56.43	Lt	Clear Creek Pkwy	907.00	904.30	2.70	100.00	2.70	6.50	904.30	893.50	10.80	205.91	5.25	0.45
5	505	0.10	0.51	Curb Inlet	32+83.19	25.50	Lt	Clear Creek Pkwy	898.00	891.00	7.00	100.00	7.00	5.60	891.00	882.09	8.91	154.35	5.77	0.20
5	504	0.01	0.78	Curb Inlet	32+83.19	25.50	Rt	Clear Creek Pkwy	882.82	882.00	0.82	22.00	3.73	2.00	#N/A	#N/A	#N/A	#N/A	#N/A	
6	620	0.15	0.60	#N/A	98+86.86	0.00	Lt	Gleason Road	863.50	858.22	5.28	71.65	7.37	6.00	#N/A	#N/A	#N/A	#N/A	#N/A	
6	619	0.24	0.60	Curb Inlet	99+09.21	27.26	Rt	Gleason Road	863.50	857.30	6.20	75.79	8.18	5.75	#N/A	#N/A	#N/A	#N/A	#N/A	
6	618	0.22	0.85	Curb Inlet	99+10.13	29.87	Lt	Gleason Road	860.16	859.34	0.82	35.91	2.28	6.00	#N/A	#N/A	#N/A	#N/A	#N/A	
6	617	1.32	0.51	Curb Inlet	4+35.00	0.00	Lt	59th Place	#N/A	#N/A	#N/A	#N/A	#N/A		#N/A	#N/A	#N/A	#N/A	#N/A	
6	616	0.00		Junction Box	3+85.00	54.50	Rt	59th Place	#N/A	#N/A	#N/A	#N/A	#N/A		#N/A	#N/A	#N/A	#N/A	#N/A	
6	615	0.00		Junction Box	3+80.00	166.49	Rt	59th Place	#N/A	#N/A	#N/A	#N/A	#N/A		#N/A	#N/A	#N/A	#N/A	#N/A	
6	614	0.00		Junction Box	6+85.00	18.37	Lt	Barth Road	#N/A	#N/A	#N/A	#N/A	#N/A		#N/A	#N/A	#N/A	#N/A	#N/A	
6	613	0.98	0.51	Curb Inlet	36+43.43	56.59	Lt	Clear Creek Pkwy	#N/A	#N/A	#N/A	#N/A	#N/A		#N/A	#N/A	#N/A	#N/A	#N/A	
6	612	0.72	0.42	Curb Inlet	37+38.00	25.50	Lt	Clear Creek Pkwy	898.25	892.00	6.25	90.45	6.91	4.60	892.00	867.63	24.37	378.94	6.43	0.65
6	611	0.53	0.48	Curb Inlet	38+81.00	25.50	Lt	Clear Creek Pkwy	878.75	874.10	4.65	100.00	4.65	5.50	874.10	860.03	14.07	176.62	7.97	0.30
6	610	0.63	0.57	Curb Inlet	35+75.00	25.75	Lt	Clear Creek Pkwy	898.25	892.00	6.25	82.59	7.57	5.00	892.00	882.95	9.05	175.20	5.17	0.38
6	609	0.23	0.78	Curb Inlet	36+02.00	25.75	Rt	Clear Creek Pkwy	883.32	883.02	0.30	23.97	1.25	2.75	#N/A	#N/A	#N/A	#N/A	#N/A	
6	608	0.12	0.78	Curb Inlet	37+38.00	25.75	Rt	Clear Creek Pkwy	878.63	873.35	5.28	87.77	6.02	5.00	#N/A	#N/A	#N/A	#N/A	#N/A	
6	607	0.16	0.78	Curb Inlet	38+81.00	25.75	Rt	Clear Creek Pkwy	869.83	864.14	5.69	86.09	6.61	4.20	#N/A	#N/A	#N/A	#N/A	#N/A	
6	606	1.62	0.51	Area Inlet	39+99.55	63.86	Lt	Clear Creek Pkwy	892.00	884.00	8.00	100.00	8.00	5.20	884.00	854.00	30.00	459.67	6.53	0.72
6	605	0.18	0.76	Curb Inlet	40+14.37	25.50	Lt	Clear Creek Pkwy	860.05	859.09	0.96	33.15	2.90	2.25	#N/A	#N/A	#N/A	#N/A	#N/A	
6	604	0.26	0.80	Curb Inlet	40+14.91	23.18	Rt	Clear Creek Pkwy	860.35	859.09	1.26	45.69	2.76	2.75	#N/A	#N/A	#N/A	#N/A	#N/A	
6	603	17.94	0.39	End Section	42+47.44	145.43	Lt	Clear Creek Pkwy	924.50	920.50	4.00	100.00	4.00	8.00	920.50	846.71	73.79	1680.41	4.39	2.20
6	602	0.00		Junction Box	40+95.28	89.36	Rt	Clear Creek Pkwy	#N/A	#N/A	#N/A	#N/A	#N/A		#N/A	#N/A	#N/A	#N/A	#N/A	
6	601	0.00		End Section	98+48.12	57.72	Lt	Gleason Road	#N/A	#N/A	#N/A	#N/A	#N/A		#N/A	#N/A	#N/A	#N/A	#N/A	
7	706	0.16	0.66	Curb Inlet	44+45.00	25.50	Lt	Clear Creek Pkwy	859.80	857.93	1.87	63.37	2.95	3.25	#N/A	#N/A	#N/A	#N/A	#N/A	
7	705	0.32	0.80	Curb Inlet	44+45.00	25.50	Rt	Clear Creek Pkwy	861.36	860.51	0.85	28.46	2.99	4.00	860.51	858.17	2.34	46.85	4.99	0.10
7	704	4.51	0.66	End Section	47+58.07	46.56	Lt	Clear Creek Pkwy	906.25	900.00	6.25	93.61	6.68	4.25	900.00	848.00	52.00	1812.34	2.87	5.50
7	703	0.25	0.76	Curb Inlet	47+58.07	25.50	Lt	Clear Creek Pkwy	856.41	856.10	0.31	18.90	1.64	1.00	#N/A	#N/A	#N/A	#N/A	#N/A	
7	702	0.28	0.78	Curb Inlet	47+58.07	25.50	Rt	Clear Creek Pkwy	856.49	856.13	0.36	22.34	1.61	1.00	#N/A	#N/A	#N/A	#N/A	#N/A	
7	701	0.00		End Section	47+58.07	56.20	Rt	Clear Creek Pkwy	#N/A	#N/A	#N/A	#N/A	#N/A		#N/A	#N/A	#N/A	#N/A	#N/A	
8	806	0.53	0.70	Curb Inlet	50+00.00	25.50	Lt	Clear Creek Pkwy	872.70	856.00	16.70	92.79	18.00	3.25	856.00	850.50	5.50	927.33	0.59	1.75
8	805	0.22	0.78	Curb Inlet	50+00.00	25.50	Rt	Clear Creek Pkwy	852.46	851.87	0.59	26.06	2.26	4.50	#N/A	#N/A	#N/A	#N/A	#N/A	
8	804	16.84	0.46	End Section	51+20.00	58.56	Lt	Clear Creek Pkwy	920.50	918.25	2.25	100.00	2.25	9.00	918.25	848.00	70.25	1712.35	4.10	3.50
8	803	0.10	0.76	Curb Inlet	51+20.00	25.50	Lt	Clear Creek Pkwy	848.81	848.42	0.39	19.08	2.04	2.00	#N/A	#N/A	#N/A	#N/A	#N/A	
8	802	0.11	0.78	Curb Inlet	51+20.00	25.50	Rt	Clear Creek Pkwy	848.95	848.36	0.59	26.06	2.26	2.25	#N/A	#N/A	#N/A	#N/A	#N/A	
8	801	0.00		End Section	51+20.00	66.45	Rt	Clear Creek Pkwy	#N/A	#N/A	#N/A	#N/A	#N/A		#N/A	#N/A	#N/A	#N/A	#N/A	
9	908	0.60	0.52	Curb Inlet	54+50.00	25.50	Lt	Clear Creek Pkwy	864.60	851.00	13.60	94.79	14.35	2.25	851.00	845.32	5.68	38.99	14.57	1.25
9	907	0.30	0.78	Curb Inlet	54+50.00	25.50	Rt	Clear Creek Pkwy	847.17	846.58	0.59	26.06	2.26	2.25	#N/A	#N/A	#N/A	#N/A	#N/A	
9	906	0.27	0.76	Curb Inlet	57+80.00	25.50	Lt	Clear Creek Pkwy	842.21	841.27	0.94	19.08	4.93	1.30	#N/A	#N/A	#N/A	#N/A	#N/A	
9	905	0.30	0.78	Curb Inlet	57+80.00	25.50	Rt	Clear Creek Pkwy	842.35	841.77	0.58	26.06	2.23	2.25	#N/A	#N/A	#N/A	#N/A	#N/A	
9	904	19.18	0.81	30° Wingwalls & Apron	60+29.54	51.38	Lt	Clear Creek Pkwy	910.50	910.00	0.50	66.46	0.75	4.75	910.00	829.00	81.00	1347.12	6.01	2.00
9	903	0.37	0.76	Curb Inlet	60+29.54	25.50	Lt	Clear Creek Pkwy	837.39	836.45	0.94	18.90	4.97	1.30	#N/A	#N/A	#N/A	#N/A	#N/A	
9	902	0.38	0.78	Curb Inlet	60+29.54	25.50	Rt	Clear Creek Pkwy	837.53	836.94	0.59	26.10	2.26	13.00	#N/A	#N/A	#N/A	#N/A	#N/A	
9	901	0.00		30° Wingwalls & Apron	60+29.54	54.89	Rt	Clear Creek Pkwy	#N/A	#N/A	#N/A	#N/A	#N/A		#N/A	#N/A	#N/A	#N/A	#N/A	
9	900B	0.00		30° Wingwalls & Apron	+45.77	16.64	Lt	South Cart Path	#N/A	#N/A	#N/A	#N/A	#N/A		#N/A	#N/A	#N/A	#N/A	#N/A	
9	900A	0.00		30° Wingwalls & Apron	+44.93	8.64	Rt	South Cart Path	#N/A	#N/A	#N/A	#N/A	#N/A		#N/A	#N/A	#N/A	#N/A	#N/A	
10	1003	0.32	0.76	Curb Inlet	61+97.14	27.12	Lt	Clear Creek Pkwy	855.41	854.60	0.81	15.18	5.34	1.00	#N/A	#N/A	#N/A	#N/A	#N/A	
10	1002	0.33	0.78	Curb Inlet	61+97.28	23.82	Rt	Clear Creek Pkwy	855.41	854.51	0.90	13.53	6.65	1.00	#N/A	#N/A	#N/A	#N/A	#N/A	
10	1001	0.00		End Section	61+97.41	58.39	Rt	Clear Creek Pkwy	#N/A	#N/A	#N/A	#N/A	#N/A		#N/A	#N/A	#N/A	#N/A	#N/A	
10	1000B	0.22	0.78	End Section	18+45.55	42.05	Lt.	Recreational Trail	#N/A	#N/A	#N/A	#N/A	#N/A		#N/A	#N/A	#N/A	#N/A	#N/A	
10	1000A	0.00		End Section	18+00.45	24.40	Rt	Recreational Trail	#N/A	#N/A	#N/A	#N/A	#N/A		#N/A	#N/A	#N/A	#N/A	#N/A	

Paved Shallow Concentrated Flow (if applicable) / Time of Concentration / Rainfall Intensity

Structure Number SN #	Paved Shallow Conc. Elevations: Upper Zscpu feet	Lower Zscpl feet	Difference DZscp feet	Length Lscp feet	Slope Sscp %	Travel Time Tscp minutes	Total Travel Time Tcof minutes	Time of Concentration Used (5≤Tci≤15) Tci minutes	Return Period/Frequency: Storm 1 5 Year Ii(5yr) in/hr	Storm 2 10 Year Ii(10yr) in/hr	Storm 3 25 Year Ii(25yr) in/hr	Storm 4 50 Year Ii(50yr) in/hr	Storm 5 100 Year Ii(100yr) in/hr	Antecedent Precipitation Factor: Storm 1 5 Year K(5yr) #	Storm 2 10 Year K(10yr) #	Storm 3 25 Year K(25yr) #	Storm 4 50 Year K(50yr) #	Storm 5 100 Year K(100yr) #
102	#N/A	#N/A	#N/A	#N/A	#N/A		4.25	5.00	6.47	7.35	8.53	9.40	10.32	1.00	1.00	1.10	1.20	1.25
101	#N/A	#N/A	#N/A	#N/A	#N/A		0.00	5.00	6.47	7.35	8.53	9.40	10.32	1.00	1.00	1.10	1.20	1.25
210	916.69	912.86	3.83	160.82	2.38	0.40	2.70	5.00	6.47	7.35	8.53	9.40	10.32	1.00	1.00	1.10	1.20	1.25
209	906.58	904.25	2.33	64.34	3.62	0.20	7.74	7.74	5.80	6.59	7.65	8.46	9.30	1.00	1.00	1.10	1.20	1.25
208	912.83	904.69	8.14	285.72	2.85	0.80	2.80	5.00	6.47	7.35	8.53	9.40	10.32	1.00	1.00	1.10	1.20	1.25
207	924.61	916.71	7.90	374.67	2.11	1.20	6.40	6.40	6.11	6.94	8.06	8.89	9.77	1.00	1.00	1.10	1.20	1.25
206	923.16	916.71	6.45	267.76	2.41	0.80	10.90	10.90	5.19	5.89	6.84	7.59	8.34	1.00	1.00	1.10	1.20	1.25
205	916.57	912.86	3.71	155.86	2.38	0.40	3.15	5.00	6.47	7.35	8.53	9.40	10.32	1.00	1.00	1.10	1.20	1.25
204	912.83	904.69	8.14	295.09	2.76	0.80	3.60	5.00	6.47	7.35	8.53	9.40	10.32	1.00	1.00	1.10	1.20	1.25
203	904.49	892.62	11.87	281.77	4.21	0.50	10.10	10.10	5.33	6.06	7.02	7.79	8.56	1.00	1.00	1.10	1.20	1.25
202	904.24	892.61	11.63	257.76	4.51	0.48	2.98	5.00	6.47	7.35	8.53	9.40	10.32	1.00	1.00	1.10	1.20	1.25
201	#N/A	#N/A	#N/A	#N/A	#N/A		0.00	5.00	6.47	7.35	8.53	9.40	10.32	1.00	1.00	1.10	1.20	1.25
304	#N/A	#N/A	#N/A	#N/A	#N/A		10.80	10.80	5.20	5.91	6.86	7.61	8.37	1.00	1.00	1.10	1.20	1.25
303	892.09	888.78	3.31	243.11	1.36	1.15	3.55	5.00	6.47	7.35	8.53	9.40	10.32	1.00	1.00	1.10	1.20	1.25
302	892.50	888.72	3.78	249.00	1.52	1.00	3.50	5.00	6.47	7.35	8.53	9.40	10.32	1.00	1.00	1.10	1.20	1.25
301	#N/A	#N/A	#N/A	#N/A	#N/A		0.00	5.00	6.47	7.35	8.53	9.40	10.32	1.00	1.00	1.10	1.20	1.25
411	875.15	874.86	0.29	25.53	1.14	2.10	10.10	10.10	5.33	6.06	7.02	7.79	8.56	1.00	1.00	1.10	1.20	1.25
410	880.94	874.86	6.08	176.78	3.44	0.40	2.90	5.00	6.47	7.35	8.53	9.40	10.32	1.00	1.00	1.10	1.20	1.25
409	881.27	876.55	4.72	103.77	4.55	0.30	5.80	5.80	6.26	7.11	8.25	9.10	10.00	1.00	1.00	1.10	1.20	1.25
408	#N/A	#N/A	#N/A	#N/A	#N/A		7.50	7.50	5.86	6.65	7.72	8.53	9.38	1.00	1.00	1.10	1.20	1.25
407	883.84	882.05	1.79	42.45	4.22	0.10	7.33	7.33	5.89	6.70	7.77	8.59	9.44	1.00	1.00	1.10	1.20	1.25
406	888.58	882.05	6.53	172.34	3.79	0.40	3.15	5.00	6.47	7.35	8.53	9.40	10.32	1.00	1.00	1.10	1.20	1.25
405	881.46	876.50	4.96	98.41	5.04	1.35	5.10	5.10	6.44	7.32	8.49	9.36	10.28	1.00	1.00	1.10	1.20	1.25
404	#N/A	#N/A	#N/A	#N/A	#N/A		14.40	14.40	4.64	5.27	6.11	6.81	7.49	1.00	1.00	1.10	1.20	1.25
403	875.73	873.19	2.54	172.49	1.47	0.72	5.52	5.52	6.33	7.20	8.35	9.20	10.11	1.00	1.00	1.10	1.20	1.25
402	875.73	873.19	2.54	172.52	1.47	0.72	4.72	5.00	6.47	7.35	8.53	9.40	10.32	1.00	1.00	1.10	1.20	1.25
401	#N/A	#N/A	#N/A	#N/A	#N/A		0.00	5.00	6.47	7.35	8.53	9.40	10.32	1.00	1.00	1.10	1.20	1.25
507	#N/A	#N/A	#N/A	#N/A	#N/A		6.50	6.50	6.09	6.92	8.02	8.86	9.73	1.00	1.00	1.10	1.20	1.25
506	893.17	881.00	12.17	219.69	5.54	0.40	7.35	7.35	5.89	6.69	7.76	8.58	9.43	1.00	1.00	1.10	1.20	1.25
505	#N/A	#N/A	#N/A	#N/A	#N/A		5.80	5.80	6.26	7.11	8.25	9.10	10.00	1.00	1.00	1.10	1.20	1.25
504	881.58	881.25	0.33	13.00	2.54	0.05	2.05	5.00	6.47	7.35	8.53	9.40	10.32	1.00	1.00	1.10	1.20	1.25
620	857.80	854.90	2.90	81.75	3.55	0.20	6.20	6.20	6.16	7.00	8.12	8.96	9.85	1.00	1.00	1.10	1.20	1.25
619	856.88	855.39	1.49	45.27	3.29	0.10	5.85	5.85	6.25	7.10	8.24	9.08	9.98	1.00	1.00	1.10	1.20	1.25
618	858.92	855.50	3.42	149.57	2.29	0.45	6.45	6.45	6.10	6.93	8.04	8.88	9.75	1.00	1.00	1.10	1.20	1.25
617	#N/A	#N/A	#N/A	#N/A	#N/A		7.40	7.40	5.88	6.68	7.75	8.57	9.41	1.00	1.00	1.10	1.20	1.25
616	#N/A	#N/A	#N/A	#N/A	#N/A		7.50	7.50	5.86	6.65	7.72	8.53	9.38	1.00	1.00	1.10	1.20	1.25
615	#N/A	#N/A	#N/A	#N/A	#N/A		7.70	7.70	5.81	6.60	7.66	8.47	9.31	1.00	1.00	1.10	1.20	1.25
614	#N/A	#N/A	#N/A	#N/A	#N/A		8.10	8.10	5.72	6.51	7.55	8.35	9.18	1.00	1.00	1.10	1.20	1.25
613	#N/A	#N/A	#N/A	#N/A	#N/A		8.30	8.30	5.68	6.46	7.49	8.29	9.11	1.00	1.00	1.10	1.20	1.25
612	867.21	864.88	2.33	28.13	8.28	0.10	5.35	5.35	6.38	7.25	8.41	9.26	10.18	1.00	1.00	1.10	1.20	1.25
611	859.61	858.76	0.85	40.87	2.08	0.10	5.90	5.90	6.23	7.09	8.22	9.07	9.96	1.00	1.00	1.10	1.20	1.25
610	882.53	875.12	7.41	186.41	3.98	0.41	5.79	5.79	6.26	7.12	8.26	9.11	10.00	1.00	1.00	1.10	1.20	1.25
609	882.60	873.24	9.36	222.27	4.21	0.53	3.28	5.00	6.47	7.35	8.53	9.40	10.32	1.00	1.00	1.10	1.20	1.25
608	872.93	864.88	8.05	101.41	7.94	0.10	5.10	5.10	6.44	7.32	8.49	9.36	10.28	1.00	1.00	1.10	1.20	1.25
607	863.72	858.76	4.96	140.93	3.52	0.30	4.50	5.00	6.47	7.35	8.53	9.40	10.32	1.00	1.00	1.10	1.20	1.25
606	#N/A	#N/A	#N/A	#N/A	#N/A		5.92	5.92	6.23	7.08	8.21	9.06	9.95	1.00	1.00	1.10	1.20	1.25
605	858.67	857.24	1.43	122.29	1.17	0.55	2.80	5.00	6.47	7.35	8.53	9.40	10.32	1.00	1.00	1.10	1.20	1.25
604	858.67	856.89	1.78	126.05	1.41	0.50	3.25	5.00	6.47	7.35	8.53	9.40	10.32	1.00	1.00	1.10	1.20	1.25
603	#N/A	#N/A	#N/A	#N/A	#N/A		10.20	10.20	5.31	6.03	7.00	7.77	8.53	1.00	1.00	1.10	1.20	1.25
602	#N/A	#N/A	#N/A	#N/A	#N/A		0.00	5.00	6.47	7.35	8.53	9.40	10.32	1.00	1.00	1.10	1.20	1.25
601	#N/A	#N/A	#N/A	#N/A	#N/A		0.00	5.00	6.47	7.35	8.53	9.40	10.32	1.00	1.00	1.10	1.20	1.25
706	857.51	855.70	1.81	129.87	1.39	0.55	3.80	5.00	6.47	7.35	8.53	9.40	10.32	1.00	1.00	1.10	1.20	1.25
705	858.17	855.70	2.47	213.71	1.16	1.15	5.25	5.25	6.40	7.28	8.44	9.30	10.22	1.00	1.00	1.10	1.20	1.25
704	#N/A	#N/A	#N/A	#N/A	#N/A		9.75	9.75	5.39	6.13	7.11	7.88	8.66	1.00	1.00	1.10	1.20	1.25
703	855.68	851.47	4.21	311.08	1.35	1.40	2.40	5.00	6.47	7.35	8.53	9.40	10.32	1.00	1.00	1.10	1.20	1.25
702	855.71	851.97	3.74	301.52	1.24	1.30	2.30	5.00	6.47	7.35	8.53	9.40	10.32	1.00	1.00	1.10	1.20	1.25
701	#N/A	#N/A	#N/A	#N/A	#N/A		0.00	5.00	6.47	7.35	8.53	9.40	10.32	1.00	1.00	1.10	1.20	1.25
806	#N/A	#N/A	#N/A	#N/A	#N/A		5.00	5.00	6.47	7.35	8.53	9.40	10.32	1.00	1.00	1.10	1.20	1.25
805	851.45	848.43	3.02	235.54	1.28	1.10	5.60	5.60	6.31	7.17	8.32	9.17	10.08	1.00	1.00	1.10	1.20	1.25
804	#N/A	#N/A	#N/A	#N/A	#N/A		12.50	12.50	4.92	5.59	6.49	7.21	7.93	1.00	1.00	1.10	1.20	1.25
803	848.00	846.18	1.82	115.86	1.57	0.48	2.48	5.00	6.47	7.35	8.53	9.40	10.32	1.00	1.00	1.10	1.20	1.25
802	847.94	846.67	1.27	115.86	1.10	0.50	2.75	5.00	6.47	7.35	8.53	9.40	10.32	1.00	1.00	1.10	1.20	1.25
801	#N/A	#N/A	#N/A	#N/A	#N/A		0.00	5.00	6.47	7.35	8.53	9.40	10.32	1.00	1.00	1.10	1.20	1.25
908	844.90	841.35	3.55	237.47	1.49	1.00	4.50	5.00	6.47	7.35	8.53	9.40	10.32	1.00	1.00	1.10	1.20	1.25
907	846.16	841.85	4.31	320.33	1.35	1.45	3.70	5.00	6.47	7.35	8.53	9.40	10.32	1.00	1.00	1.10	1.20	1.25
906	840.85	836.53	4.32	324.13	1.33	1.35	2.65	5.00	6.47	7.35	8.53	9.40	10.32	1.00	1.00	1.10	1.20	1.25
905	841.35	837.08	4.27	324.60	1.32	1.52	3.77	5.00	6.47	7.35	8.53	9.40	10.32	1.00	1.00	1.10	1.20	1.25
904	#N/A	#N/A	#N/A	#N/A	#N/A		6.75	6.75	6.03	6.85	7.95	8.78	9.64	1.00	1.00	1.10	1.20	1.25
903	836.03	833.41	2.62	238.53	1.10	1.25	2.55	5.00	6.47	7.35	8.53	9.40	10.32	1.00	1.00	1.10	1.20	1.25
902	836.52	833.91	2.61	247.56	1.05	1.31	14.31	14.31	4.65	5.29	6.13	6.83	7.51	1.00	1.00	1.10	1.20	1.25
901	#N/A	#N/A	#N/A	#N/A	#N/A		0.00	5.00	6.47	7.35	8.53	9.40	10.32	1.00	1.00	1.10	1.20	1.25
900B	#N/A	#N/A	#N/A	#N/A	#N/A		0.00	5.00	6.47	7.35	8.53	9.40	10.32	1.00	1.00	1.10	1.20	1.25
900A	#N/A	#N/A	#N/A	#N/A	#N/A		0.00	5.00	6.47	7.35	8.53	9.40	10.32	1.00	1.00	1.10	1.20	1.25
1003	854.60	835.38	19.22	496.18	3.87	1.10	2.10	5.00	6.47	7.35	8.53	9.40	10.32	1.00	1.00	1.10	1.20	1.25
1002	854.51	835.24	19.27	484.82	3.97	1.10	2.10	5.00	6.47	7.35	8.53	9.40	10.32	1.00	1.00	1.10	1.20	1.25
1001	#N/A	#N/A	#N/A	#N/A	#N/A		0.00	5.00	6.47	7.35	8.53	9.40	10.32	1.00	1.00	1.10	1.20	1.25
1000B	#N/A	#N/A	#N/A	#N/A	#N/A		0.00	5.00	6.47	7.35	8.53	9.40	10.32	1.00	1.00	1.10	1.20	1.25
1000A	#N/A	#N/A	#N/A	#N/A	#N/A		0.00	5.00	6.47	7.35	8.53	9.40	10.32	1.00	1.00	1.10	1.20	1.25

Check C*K Less Than Or Equal To 1.00 / Actual C*K Used / Inlet Flow Calculations: Runoff (Qi=KCIA)

Structure Number SN #	Check C*K: Storm 1 5 Year CK(5yr) #	Storm 2 10 Year CK(10yr) #	Storm 3 25 Year CK(25yr) #	Storm 4 50 Year CK(50yr) #	Storm 5 100 Year CK(100yr) #	Actual C*K Used: Storm 1 5 Year CK(5yr) #	Storm 2 10 Year CK(10yr) #	Storm 3 25 Year CK(25yr) #	Storm 4 50 Year CK(50yr) #	Storm 5 100 Year CK(100yr) #	Runoff: Storm 1 5 Year Qi(5yr) cfs	Storm 2 10 Year Qi(10yr) cfs	Storm 3 25 Year Qi(25yr) cfs	Storm 4 50 Year Qi(50yr) cfs	Storm 5 100 Year Qi(100yr) cfs
102	0.50	0.50	0.55	0.60	0.63	0.50	0.50	0.55	0.60	0.63	1.68	1.91	2.44	2.93	3.38
101	0.00	0.00	0.00	0.00	0.00	0.00	0.00	0.00	0.00	0.00	0.00	0.00	0.00	0.00	0.00
210	0.76	0.76	0.84	0.91	0.95	0.76	0.76	0.84	0.91	0.95	0.79	0.89	1.15	1.37	1.57
209	0.51	0.51	0.56	0.61	0.64	0.51	0.51	0.56	0.61	0.64	1.75	1.98	2.53	3.04	3.51
208	0.76	0.76	0.84	0.91	0.95	0.76	0.76	0.84	0.91	0.95	1.43	1.62	2.08	2.48	2.84
207	0.70	0.70	0.77	0.84	0.88	0.70	0.70	0.77	0.84	0.88	2.40	2.72	3.48	4.18	4.81
206	0.51	0.51	0.56	0.61	0.64	0.51	0.51	0.56	0.61	0.64	2.70	3.06	3.91	4.72	5.44
205	0.70	0.70	0.77	0.84	0.88	0.70	0.70	0.77	0.84	0.88	1.00	1.13	1.44	1.74	2.00
204	0.78	0.78	0.86	0.94	0.98	0.78	0.78	0.86	0.94	0.98	1.36	1.55	1.98	2.39	2.73
203	0.58	0.58	0.64	0.70	0.73	0.58	0.58	0.64	0.70	0.73	3.28	3.73	4.76	5.78	6.62
202	0.76	0.76	0.84	0.91	0.95	0.76	0.76	0.84	0.91	0.95	1.23	1.40	1.79	2.14	2.45
201	0.00	0.00	0.00	0.00	0.00	0.00	0.00	0.00	0.00	0.00	0.00	0.00	0.00	0.00	0.00
304	0.60	0.60	0.66	0.72	0.75	0.60	0.60	0.66	0.72	0.75	112.91	136.35	162.33	186.18	214.70
303	0.76	0.76	0.84	0.91	0.95	0.76	0.76	0.84	0.91	0.95	1.03	1.17	1.50	1.80	2.06
302	0.78	0.78	0.86	0.94	0.98	0.78	0.78	0.86	0.94	0.98	1.92	2.18	2.79	3.36	3.84
301	0.00	0.00	0.00	0.00	0.00	0.00	0.00	0.00	0.00	0.00	0.00	0.00	0.00	0.00	0.00
411	0.54	0.54	0.59	0.65	0.68	0.54	0.54	0.59	0.65	0.68	1.99	2.26	2.86	3.49	4.02
410	0.78	0.78	0.86	0.94	0.98	0.78	0.78	0.86	0.94	0.98	0.86	0.97	1.25	1.50	1.72
409	0.54	0.54	0.59	0.65	0.68	0.54	0.54	0.59	0.65	0.68	2.30	2.61	3.31	4.02	4.62
408	0.51	0.51	0.56	0.61	0.64	0.51	0.51	0.56	0.61	0.64	3.02	3.43	4.37	5.26	6.06
407	0.60	0.60	0.66	0.72	0.75	0.60	0.60	0.66	0.72	0.75	1.91	2.17	2.77	3.34	3.82
406	0.78	0.78	0.86	0.94	0.98	0.78	0.78	0.86	0.94	0.98	0.76	0.86	1.10	1.33	1.52
405	0.78	0.78	0.86	0.94	0.98	0.78	0.78	0.86	0.94	0.98	0.75	0.86	1.10	1.32	1.51
404	0.51	0.51	0.56	0.61	0.64	0.51	0.51	0.56	0.61	0.64	251.68	309.77	374.66	434.56	506.45
403	0.76	0.76	0.84	0.91	0.95	0.76	0.76	0.84	0.91	0.95	1.44	1.64	2.10	2.51	2.88
402	0.78	0.78	0.86	0.94	0.98	0.78	0.78	0.86	0.94	0.98	1.56	1.78	2.27	2.74	3.14
401	0.00	0.00	0.00	0.00	0.00	0.00	0.00	0.00	0.00	0.00	0.00	0.00	0.00	0.00	0.00
507	0.51	0.51	0.56	0.61	0.64	0.51	0.51	0.56	0.61	0.64	1.89	2.15	2.74	3.30	3.80
506	0.51	0.51	0.56	0.61	0.64	0.51	0.51	0.56	0.61	0.64	2.88	3.28	4.17	5.02	5.79
505	0.51	0.51	0.56	0.61	0.64	0.51	0.51	0.56	0.61	0.64	0.32	0.36	0.46	0.56	0.64
504	0.78	0.78	0.86	0.94	0.98	0.78	0.78	0.86	0.94	0.98	0.05	0.06	0.07	0.09	0.10
620	0.60	0.60	0.66	0.72	0.75	0.60	0.60	0.66	0.72	0.75	0.55	0.63	0.80	0.97	1.11
619	0.60	0.60	0.66	0.72	0.75	0.60	0.60	0.66	0.72	0.75	0.90	1.02	1.31	1.57	1.80
618	0.85	0.85	0.94	1.02	1.06	0.85	0.85	0.94	1.00	1.00	1.14	1.30	1.66	1.95	2.15
617	0.51	0.51	0.56	0.61	0.64	0.51	0.51	0.56	0.61	0.64	3.96	4.50	5.73	6.90	7.95
616	0.00	0.00	0.00	0.00	0.00	0.00	0.00	0.00	0.00	0.00	0.00	0.00	0.00	0.00	0.00
615	0.00	0.00	0.00	0.00	0.00	0.00	0.00	0.00	0.00	0.00	0.00	0.00	0.00	0.00	0.00
614	0.00	0.00	0.00	0.00	0.00	0.00	0.00	0.00	0.00	0.00	0.00	0.00	0.00	0.00	0.00
613	0.51	0.51	0.56	0.61	0.64	0.51	0.51	0.56	0.61	0.64	2.84	3.23	4.11	4.96	5.71
612	0.42	0.42	0.46	0.50	0.53	0.42	0.42	0.46	0.50	0.53	1.93	2.19	2.79	3.33	3.88
611	0.48	0.48	0.53	0.58	0.60	0.48	0.48	0.53	0.58	0.60	1.58	1.80	2.31	2.79	3.17
610	0.57	0.57	0.63	0.68	0.71	0.57	0.57	0.63	0.68	0.71	2.25	2.56	3.28	3.90	4.47
609	0.78	0.78	0.86	0.94	0.98	0.78	0.78	0.86	0.94	0.98	1.16	1.32	1.69	2.03	2.33
608	0.78	0.78	0.86	0.94	0.98	0.78	0.78	0.86	0.94	0.98	0.60	0.69	0.88	1.06	1.21
607	0.78	0.78	0.86	0.94	0.98	0.78	0.78	0.86	0.94	0.98	0.81	0.92	1.17	1.41	1.62
606	0.51	0.51	0.56	0.61	0.64	0.51	0.51	0.56	0.61	0.64	5.15	5.85	7.45	8.95	10.32
605	0.76	0.76	0.84	0.91	0.95	0.76	0.76	0.84	0.91	0.95	0.89	1.01	1.29	1.54	1.76
604	0.80	0.80	0.88	0.96	1.00	0.80	0.80	0.88	0.96	1.00	1.35	1.53	1.95	2.35	2.68
603	0.39	0.39	0.43	0.47	0.49	0.39	0.39	0.43	0.47	0.49	85.60	106.84	130.73	153.01	180.02
602	0.00	0.00	0.00	0.00	0.00	0.00	0.00	0.00	0.00	0.00	0.00	0.00	0.00	0.00	0.00
601	0.00	0.00	0.00	0.00	0.00	0.00	0.00	0.00	0.00	0.00	0.00	0.00	0.00	0.00	0.00
706	0.66	0.66	0.73	0.79	0.83	0.66	0.66	0.73	0.79	0.83	0.68	0.78	1.00	1.19	1.37
705	0.80	0.80	0.88	0.96	1.00	0.80	0.80	0.88	0.96	1.00	1.64	1.86	2.38	2.86	3.27
704	0.66	0.66	0.73	0.79	0.83	0.66	0.66	0.73	0.79	0.83	25.09	29.94	35.29	40.20	46.06
703	0.76	0.76	0.84	0.91	0.95	0.76	0.76	0.84	0.91	0.95	1.23	1.40	1.79	2.14	2.45
702	0.78	0.78	0.86	0.94	0.98	0.78	0.78	0.86	0.94	0.98	1.41	1.61	2.05	2.47	2.83
701	0.00	0.00	0.00	0.00	0.00	0.00	0.00	0.00	0.00	0.00	0.00	0.00	0.00	0.00	0.00
806	0.70	0.70	0.77	0.84	0.88	0.70	0.70	0.77	0.84	0.88	2.40	2.73	3.48	4.18	4.81
805	0.78	0.78	0.86	0.94	0.98	0.78	0.78	0.86	0.94	0.98	1.08	1.23	1.57	1.90	2.17
804	0.46	0.46	0.51	0.55	0.58	0.46	0.46	0.51	0.55	0.58	63.11	77.67	93.93	108.93	126.94
803	0.76	0.76	0.84	0.91	0.95	0.76	0.76	0.84	0.91	0.95	0.49	0.56	0.72	0.86	0.98
802	0.78	0.78	0.86	0.94	0.98	0.78	0.78	0.86	0.94	0.98	0.56	0.63	0.81	0.97	1.11
801	0.00	0.00	0.00	0.00	0.00	0.00	0.00	0.00	0.00	0.00	0.00	0.00	0.00	0.00	0.00
908	0.52	0.52	0.57	0.62	0.65	0.52	0.52	0.57	0.62	0.65	2.02	2.29	2.92	3.50	4.02
907	0.78	0.78	0.86	0.94	0.98	0.78	0.78	0.86	0.94	0.98	1.51	1.72	2.20	2.65	3.03
906	0.76	0.76	0.84	0.91	0.95	0.76	0.76	0.84	0.91	0.95	1.33	1.51	1.93	2.31	2.65
905	0.78	0.78	0.86	0.94	0.98	0.78	0.78	0.86	0.94	0.98	1.51	1.72	2.20	2.65	3.03
904	0.81	0.81	0.89	0.97	1.01	0.81	0.81	0.89	0.97	1.00	116.55	136.53	158.59	178.81	203.00
903	0.76	0.76	0.84	0.91	0.95	0.76	0.76	0.84	0.91	0.95	1.82	2.07	2.65	3.16	3.63
902	0.78	0.78	0.86	0.94	0.98	0.78	0.78	0.86	0.94	0.98	1.38	1.57	2.00	2.44	2.80
901	0.00	0.00	0.00	0.00	0.00	0.00	0.00	0.00	0.00	0.00	0.00	0.00	0.00	0.00	0.00
900B	0.00	0.00	0.00	0.00	0.00	0.00	0.00	0.00	0.00	0.00	0.00	0.00	0.00	0.00	0.00
900A	0.00	0.00	0.00	0.00	0.00	0.00	0.00	0.00	0.00	0.00	0.00	0.00	0.00	0.00	0.00
1003	0.76	0.76	0.84	0.91	0.95	0.76	0.76	0.84	0.91	0.95	1.57	1.79	2.29	2.74	3.14
1002	0.78	0.78	0.86	0.94	0.98	0.78	0.78	0.86	0.94	0.98	1.67	1.89	2.42	2.92	3.34
1001	0.00	0.00	0.00	0.00	0.00	0.00	0.00	0.00	0.00	0.00	0.00	0.00	0.00	0.00	0.00
1000B	0.78	0.78	0.86	0.94	0.98	0.78	0.78	0.86	0.94	0.98	1.11	1.26	1.61	1.94	2.22
1000A	0.00	0.00	0.00	0.00	0.00	0.00	0.00	0.00	0.00	0.00	0.00	0.00	0.00	0.00	0.00

Inlet Flow Calculations: Additional Runoff From Upstream Bypass / Total Runoff To This Structure

Structure Number SN #	Additional Runoff: Storm 1 5 Year Qubp(5yr) cfs	Storm 2 10 Year Qubp(10yr) cfs	Storm 3 25 Year Qubp(25yr) cfs	Storm 4 50 Year Qubp(50yr) cfs	Storm 5 100 Year Qubp(100yr) cfs	From Structure Number SNubp #	Total Runoff: Storm 1 5 Year Qit(5yr) cfs	Storm 2 10 Year Qit(10yr) cfs	Storm 3 25 Year Qit(25yr) cfs	Storm 4 50 Year Qit(50yr) cfs	Storm 5 100 Year Qit(100yr) cfs
102	0.00	0.00	0.00	0.00	0.00	#N/A	1.68	1.91	2.44	2.93	3.38
101	0.00	0.00	0.00	0.00	0.00	#N/A	0.00	0.00	0.00	0.00	0.00
210	0.20	0.27	0.50	0.75	1.01	207	0.99	1.16	1.65	2.12	2.58
209	0.00	0.00	0.00	0.00	0.00	#N/A	1.75	1.98	2.53	3.04	3.51
208	0.01	0.02	0.07	0.14	0.24	210	1.44	1.64	2.15	2.62	3.08
207	0.00	0.00	0.00	0.00	0.00	#N/A	2.40	2.72	3.48	4.18	4.81
206	0.00	0.00	0.00	0.00	0.00	#N/A	2.70	3.06	3.91	4.72	5.44
205	0.27	0.37	0.65	0.97	1.31	206	1.27	1.50	2.09	2.71	3.31
204	0.03	0.05	0.14	0.27	0.44	205	1.39	1.60	2.12	2.66	3.17
203	0.26	0.36	0.64	0.97	1.34	204 & 209	3.54	4.09	5.40	6.75	7.96
202	0.06	0.08	0.17	0.28	0.40	208	1.29	1.48	1.96	2.42	2.85
201	0.00	0.00	0.00	0.00	0.00	#N/A	0.00	0.00	0.00	0.00	0.00
304	0.00	0.00	0.00	0.00	0.00	#N/A	112.91	136.35	162.33	186.18	214.70
303	0.03	0.05	0.11	0.19	0.28	202	1.06	1.22	1.61	1.99	2.34
302	0.46	0.63	1.13	1.76	2.41	203	2.38	2.81	3.92	5.12	6.25
301	0.00	0.00	0.00	0.00	0.00	#N/A	0.00	0.00	0.00	0.00	0.00
411	1.04	1.36	2.19	3.13	4.06	505 & 506	3.03	3.62	5.05	6.62	8.08
410	0.00	0.00	0.00	0.00	0.00	504	0.86	0.97	1.25	1.50	1.72
409	0.77	1.01	1.64	2.33	3.03	407 & 408	3.07	3.62	4.95	6.35	7.65
408	0.00	0.00	0.00	0.00	0.00	#N/A	3.02	3.43	4.37	5.26	6.06
407	0.00	0.00	0.01	0.03	0.05	303	1.91	2.17	2.78	3.37	3.87
406	0.05	0.08	0.21	0.41	0.66	302	0.81	0.94	1.31	1.74	2.18
405	0.00	0.01	0.03	0.08	0.14	406	0.75	0.87	1.13	1.40	1.65
404	0.00	0.00	0.00	0.00	0.00	#N/A	251.68	309.77	374.66	434.56	506.45
403	0.51	0.76	1.54	2.64	3.86	409 & 411	1.95	2.40	3.64	5.15	6.74
402	0.00	0.02	0.05	0.10	0.16	405 & 410	1.56	1.80	2.32	2.84	3.30
401	0.00	0.00	0.00	0.00	0.00	#N/A	0.00	0.00	0.00	0.00	0.00
507	0.00	0.00	0.00	0.00	0.00	#N/A	1.89	2.15	2.74	3.30	3.80
506	0.42	0.54	0.85	1.19	1.53	507	3.30	3.82	5.02	6.21	7.32
505	0.00	0.00	0.00	0.00	0.00	#N/A	0.32	0.36	0.46	0.56	0.64
504	0.00	0.00	0.00	0.00	0.00	#N/A	0.05	0.06	0.07	0.09	0.10
620	0.01	0.02	0.06	0.10	0.14	618 & 619	0.56	0.65	0.86	1.07	1.25
619	0.00	0.00	0.00	0.00	0.00	#N/A	0.90	1.02	1.31	1.57	1.80
618	0.00	0.00	0.00	0.00	0.00	#N/A	1.14	1.30	1.66	1.95	2.15
617	0.00	0.00	0.00	0.00	0.00	#N/A	3.96	4.50	5.73	6.90	7.95
616	0.00	0.00	0.00	0.00	0.00	#N/A	0.00	0.00	0.00	0.00	0.00
615	0.00	0.00	0.00	0.00	0.00	#N/A	0.00	0.00	0.00	0.00	0.00
614	0.00	0.00	0.00	0.00	0.00	#N/A	0.00	0.00	0.00	0.00	0.00
613	0.00	0.00	0.00	0.00	0.00	#N/A	2.84	3.23	4.11	4.96	5.71
612	1.17	1.51	2.39	3.33	4.25	610 & 613	3.10	3.70	5.18	6.66	8.13
611	0.39	0.57	1.14	1.86	2.69	612	1.97	2.37	3.45	4.65	5.86
610	0.00	0.00	0.00	0.00	0.00	#N/A	2.25	2.56	3.28	3.90	4.47
609	0.00	0.00	0.00	0.00	0.00	#N/A	1.16	1.32	1.69	2.03	2.33
608	0.06	0.09	0.17	0.27	0.37	609	0.66	0.78	1.05	1.33	1.58
607	0.00	0.01	0.02	0.05	0.08	608	0.81	0.93	1.19	1.46	1.70
606	0.00	0.00	0.00	0.00	0.00	#N/A	5.15	5.85	7.45	8.95	10.32
605	0.07	0.12	0.31	0.61	1.00	611	0.96	1.13	1.60	2.15	2.76
604	0.00	0.00	0.02	0.04	0.06	607	1.35	1.53	1.97	2.39	2.74
603	0.00	0.00	0.00	0.00	0.00	#N/A	85.60	106.84	130.73	153.01	180.02
602	0.00	0.00	0.00	0.00	0.00	#N/A	0.00	0.00	0.00	0.00	0.00
601	0.00	0.00	0.00	0.00	0.00	#N/A	0.00	0.00	0.00	0.00	0.00
706	0.00	0.00	0.00	0.00	0.00	#N/A	0.68	0.78	1.00	1.19	1.37
705	0.00	0.00	0.00	0.00	0.00	#N/A	1.64	1.86	2.38	2.86	3.27
704	0.00	0.00	0.00	0.00	0.00	#N/A	25.09	29.94	35.29	40.20	46.06
703	0.00	0.00	0.00	0.00	0.01	706	1.23	1.40	1.79	2.14	2.46
702	0.02	0.03	0.08	0.15	0.22	705	1.43	1.64	2.13	2.62	3.05
701	0.00	0.00	0.00	0.00	0.00	#N/A	0.00	0.00	0.00	0.00	0.00
806	0.00	0.01	0.03	0.05	0.08	703	2.40	2.74	3.51	4.23	4.89
805	0.01	0.02	0.05	0.10	0.15	702	1.09	1.25	1.62	2.00	2.32
804	0.00	0.00	0.00	0.00	0.00	#N/A	63.11	77.67	93.93	108.93	126.94
803	0.13	0.19	0.37	0.58	0.80	806	0.62	0.75	1.09	1.44	1.78
802	0.00	0.01	0.03	0.07	0.12	805	0.56	0.64	0.84	1.04	1.23
801	0.00	0.00	0.00	0.00	0.00	#N/A	0.00	0.00	0.00	0.00	0.00
908	0.00	0.00	0.00	0.01	0.03	803	2.02	2.29	2.92	3.51	4.05
907	0.00	0.00	0.00	0.00	0.01	802	1.51	1.72	2.20	2.65	3.04
906	0.08	0.11	0.23	0.37	0.52	908	1.41	1.62	2.16	2.68	3.17
905	0.03	0.04	0.10	0.17	0.25	907	1.54	1.76	2.30	2.82	3.28
904	0.00	0.00	0.00	0.00	0.00	#N/A	116.55	136.53	158.59	178.81	203.00
903	0.05	0.08	0.21	0.37	0.55	906 & 1003	1.87	2.15	2.86	3.53	4.18
902	0.07	0.11	0.25	0.43	0.63	905 & 1002	1.45	1.68	2.25	2.87	3.43
901	0.00	0.00	0.00	0.00	0.00	#N/A	0.00	0.00	0.00	0.00	0.00
900B	0.00	0.00	0.00	0.00	0.00	#N/A	0.00	0.00	0.00	0.00	0.00
900A	0.00	0.00	0.00	0.00	0.00	#N/A	0.00	0.00	0.00	0.00	0.00
1003	0.00	0.00	0.00	0.00	0.00	#N/A	1.57	1.79	2.29	2.74	3.14
1002	0.00	0.00	0.00	0.00	0.00	#N/A	1.67	1.89	2.42	2.92	3.34
1001	0.00	0.00	0.00	0.00	0.00	#N/A	0.00	0.00	0.00	0.00	0.00
1000B	0.00	0.00	0.00	0.00	0.00	#N/A	1.11	1.26	1.61	1.94	2.22
1000A	0.00	0.00	0.00	0.00	0.00	#N/A	0.00	0.00	0.00	0.00	0.00

Notes:

1 Information for Canyon Lakes future storm structures was obtained from coordination plans provided by Phelps Engineering, Inc. (PEI).
2 Canyon Lakes future structures were included in the analysis to assess and plan for the future impacts to Clear Creek Parkway's drainage system.
3 Lengths of pipe shown on the plans, profiles and calculations sheets are based on lineal feet measurements along pipe centerline from the structure inside face to structure inside face.
4 Lengths of pipe shown on the Summary Of Storm Drainage Quantities and Quantity Recapitulation sheets are based on lineal feet measurements along pipe centerline from the structure inside face to structure inside face rounded up to the nearest foot.

LAYOUT: MODEL | BY: jadams | DATE: 20-SEP-2016 10:36:25 AM
L:\150561-010_Cad\Civil\Drainage Map And Calcs\150561-010_DRAIN-CALC-01.dgn

REV.	DATE	REVISIONS	BY	APP'D
5				
4				
3				
2				
1				

COPYRIGHT © -2016-SHAFER, KLINE & WARREN INC.

Designed By: PRP
Drawn By: JCK/JAA
Checked By: HDL
Issue Date: SEPT. 2016

SHAFER, KLINE & WARREN
11250 Corporate Avenue
Lenexa, KS 66219-1392
913.888.7800 FAX: 913.888.7868
SURVEYING | ENGINEERING | CONSTRUCTION

CLEAR CREEK PARKWAY
CITY OF SHAWNEE, KANSAS

DRAINAGE CALCULATIONS (1)

150561-010

NOT FOR CONSTRUCTION

Inlet Capacity And Gutter Spread Calculations - Table II

Structure Information

Line Number LN #	Structure Number SN #	Type SNtype #	Station SNs stations	Offset (Location Point) Snoc feet	Side SNsd text	Name Sname text	Profile Grade Elevation SNpg feet	Length SNl feet	Width SNw feet	Height SNh feet	Standard Or Special Design SNd text	Top Elevation SNte feet	Drainage Condition SNc text
1	102	Area Inlet	49+28.11	14.69	Lt	Clare Road	927.62	4.00	4.00	3.50	Shallow	926.81	Sump
1	101	End Section	50+81.89	22.39	Lt	Clare Road	927.22	6.00	2.88	1.44	#N/A	925.04	On Grade
2	210	Curb Inlet	16+18.00	25.50	Lt	Clear Creek Pkwy	913.27	5.00	4.00	6.50	Standard	913.20	On Grade
2	209	Curb Inlet	19+48.01	60.07	Rt	Clear Creek Pkwy	904.30	10.00	4.00	7.00	Standard	904.75	On Grade
2	208	Curb Inlet	19+15.00	25.50	Lt	Clear Creek Pkwy	905.12	8.00	4.00	6.50	Standard	905.05	On Grade
2	207	Curb Inlet	14+50.00	25.50	Lt	Clear Creek Pkwy	917.14	5.00	4.00	6.50	Standard	917.07	On Grade
2	206	Curb Inlet	14+50.00	25.50	Rt	Clear Creek Pkwy	917.14	5.00	4.00	7.00	Standard	917.07	On Grade
2	205	Curb Inlet	16+18.00	25.50	Rt	Clear Creek Pkwy	913.27	5.00	4.00	7.50	Standard	913.20	On Grade
2	204	Curb Inlet	19+15.00	25.75	Rt	Clear Creek Pkwy	905.12	8.00	4.50	8.50	Standard	905.05	On Grade
2	203	Curb Inlet	22+00.00	26.00	Rt	Clear Creek Pkwy	893.03	8.00	5.00	8.00	Standard	892.96	On Grade
2	202	Curb Inlet	22+00.00	26.00	Lt	Clear Creek Pkwy	893.03	8.00	5.00	8.50	Standard	892.96	On Grade
2	201	End Section	22+45.36	80.12	Lt	Clear Creek Pkwy	891.75	6.00	5.58	2.79	#N/A	887.66	On Grade
3	304	Outlet Control Structure	24+48.33	65.55	Lt	Clear Creek Pkwy	889.25	8.00	6.00	12.00	Special	886.20	Sump
3	303	Curb Inlet	24+52.66	25.50	Lt	Clear Creek Pkwy	889.20	10.00	4.00	16.00	Special	889.13	On Grade
3	302	Curb Inlet	24+59.73	25.50	Rt	Clear Creek Pkwy	889.13	10.00	4.00	17.50	Special	889.06	On Grade
3	301	End Section	24+76.05	101.03	Rt	Clear Creek Pkwy	888.97	8.21	8.42	4.96	#N/A	876.31	On Grade
4	411	Curb Inlet	31+00.00	25.50	Lt	Clear Creek Pkwy	878.44	10.00	4.00	6.50	Standard	878.37	On Grade
4	410	Curb Inlet	31+00.00	25.50	Rt	Clear Creek Pkwy	878.44	5.00	4.00	7.50	Standard	878.37	On Grade
4	409	Curb Inlet	27+87.00	25.50	Lt	Clear Creek Pkwy	879.92	10.00	4.00	6.50	Standard	879.86	On Grade
4	408	Curb Inlet	26+93.18	59.02	Lt	Clear Creek Pkwy	883.07	10.00	4.00	5.50	Standard	881.50	On Grade
4	407	Curb Inlet	26+62.00	25.50	Lt	Clear Creek Pkwy	884.12	8.00	4.00	8.50	Standard	884.05	On Grade
4	406	Curb Inlet	26+62.00	25.50	Rt	Clear Creek Pkwy	884.12	8.00	4.00	9.50	Standard	884.05	On Grade
4	405	Curb Inlet	27+87.00	25.75	Rt	Clear Creek Pkwy	879.92	8.00	4.50	7.50	Standard	879.86	On Grade
4	404	Outlet Control Structure	29+67.62	73.95	Lt	Clear Creek Pkwy	876.71	10.00	9.00	16.50	Special	874.10	Sump
4	403	Curb Inlet	29+67.62	25.50	Lt	Clear Creek Pkwy	876.71	10.00	4.00	17.50	Special	876.64	Sump
4	402	Curb Inlet	29+67.62	25.75	Rt	Clear Creek Pkwy	876.71	10.00	4.50	22.50	Special	876.64	Sump
4	401	End Section	29+90.12	133.36	Rt	Clear Creek Pkwy	876.76	8.25	10.00	6.58	#N/A	860.63	On Grade
5	507	Curb Inlet	+52.00	19.50	Lt	59th Place	891.90	8.00	4.00	5.00	Standard	892.00	On Grade
5	506	Curb Inlet	32+41.37	56.43	Lt	Clear Creek Pkwy	881.92	10.00	4.00	5.00	Standard	881.00	On Grade
5	505	Curb Inlet	32+83.19	25.50	Lt	Clear Creek Pkwy	882.37	8.00	4.00	7.00	Standard	882.30	On Grade
5	504	Curb Inlet	32+83.19	25.50	Rt	Clear Creek Pkwy	882.37	5.00	4.00	8.00	Standard	882.30	On Grade
6	620	#N/A	98+86.86	0.00	Lt	Gleason Road	855.21	#N/A	#N/A	#N/A	#N/A	#N/A	On Grade
6	619	Curb Inlet	99+09.21	27.26	Rt	Gleason Road	855.67	8.00	4.00	6.50	Standard	855.72	On Grade
6	618	Curb Inlet	99+10.13	29.87	Lt	Gleason Road	855.67	8.00	4.00	7.50	Standard	855.85	On Grade
6	617	Curb Inlet	4+35.00	0.00	Lt	59th Place	893.00	8.00	4.00	5.00	Standard	893.50	Sump
6	616	Junction Box	3+85.00	54.50	Rt	59th Place	894.00	4.00	4.00	7.00	Standard	894.00	On Grade
6	615	Junction Box	3+80.00	166.49	Rt	59th Place	894.00	4.00	4.00	5.00	Standard	887.25	On Grade
6	614	Junction Box	6+85.00	18.37	Lt	Barth Road	877.00	4.00	4.00	5.00	Standard	877.50	On Grade
6	613	Curb Inlet	36+43.43	56.59	Lt	Clear Creek Pkwy	870.88	10.00	4.00	7.00	Standard	873.00	On Grade
6	612	Curb Inlet	37+38.00	25.50	Lt	Clear Creek Pkwy	864.92	10.00	4.00	6.50	Standard	864.85	On Grade
6	611	Curb Inlet	38+81.00	25.50	Lt	Clear Creek Pkwy	859.17	10.00	4.00	6.50	Standard	859.10	On Grade
6	610	Curb Inlet	35+75.00	25.75	Lt	Clear Creek Pkwy	875.15	5.00	4.50	10.00	Standard	875.08	On Grade
6	609	Curb Inlet	36+02.00	25.75	Rt	Clear Creek Pkwy	873.58	5.00	4.50	9.50	Standard	873.51	On Grade
6	608	Curb Inlet	37+38.00	25.75	Rt	Clear Creek Pkwy	864.92	10.00	4.50	7.50	Standard	864.85	On Grade
6	607	Curb Inlet	38+81.00	25.75	Rt	Clear Creek Pkwy	859.17	8.00	4.50	7.50	Standard	859.10	On Grade
6	606	Area Inlet	39+99.55	63.86	Lt	Clear Creek Pkwy	857.45	4.00	4.00	5.00	Standard	853.60	Sump
6	605	Curb Inlet	40+14.37	25.50	Lt	Clear Creek Pkwy	857.42	10.00	4.00	9.50	Standard	857.59	Sump
6	604	Curb Inlet	40+14.91	23.18	Rt	Clear Creek Pkwy	857.42	10.00	4.50	10.00	Standard	857.24	Sump
6	603	End Section	42+47.44	145.43	Lt	Clear Creek Pkwy	858.07	7.79	8.42	5.46	#N/A	846.80	Sump
6	602	Junction Box	40+95.28	89.36	Rt	Clear Creek Pkwy	857.98	10.00	7.00	15.00	Special	855.00	On Grade
6	601	End Section	98+48.12	57.72	Lt	Gleason Road	854.32	8.21	8.42	5.46	#N/A	846.30	On Grade
7	706	Curb Inlet	44+45.00	25.50	Lt	Clear Creek Pkwy	856.11	5.00	4.00	6.50	Standard	856.05	On Grade
7	705	Curb Inlet	44+45.00	25.50	Rt	Clear Creek Pkwy	856.11	5.00	4.00	7.00	Standard	856.05	On Grade
7	704	End Section	47+58.07	46.56	Lt	Clear Creek Pkwy	851.95	6.00	4.50	3.08	#N/A	850.19	Sump
7	703	Curb Inlet	47+58.07	25.50	Lt	Clear Creek Pkwy	851.95	10.00	4.00	5.50	Standard	851.88	On Grade
7	702	Curb Inlet	47+58.07	25.50	Rt	Clear Creek Pkwy	851.95	10.00	4.00	6.00	Standard	851.88	On Grade
7	701	End Section	47+58.07	56.20	Rt	Clear Creek Pkwy	851.95	6.00	4.50	3.08	#N/A	849.83	On Grade
8	806	Curb Inlet	50+00.00	25.50	Lt	Clear Creek Pkwy	848.42	5.00	4.00	6.50	Standard	848.36	On Grade
8	805	Curb Inlet	50+00.00	25.50	Rt	Clear Creek Pkwy	848.42	5.00	4.00	7.00	Standard	848.36	On Grade
8	804	End Section	51+20.00	58.56	Lt	Clear Creek Pkwy	846.66	7.79	7.25	3.88	#N/A	842.53	Sump
8	803	Curb Inlet	51+20.00	25.50	Lt	Clear Creek Pkwy	846.66	8.00	4.00	9.00	Standard	846.59	On Grade
8	802	Curb Inlet	51+20.00	25.50	Rt	Clear Creek Pkwy	846.66	8.00	4.00	9.50	Standard	846.59	On Grade
8	801	End Section	51+20.00	66.45	Rt	Clear Creek Pkwy	846.66	8.17	7.25	3.88	#N/A	841.78	On Grade
9	908	Curb Inlet	54+50.00	25.50	Lt	Clear Creek Pkwy	841.84	5.00	4.00	6.50	Standard	841.78	On Grade
9	907	Curb Inlet	54+50.00	25.50	Rt	Clear Creek Pkwy	841.84	5.00	4.00	7.00	Standard	841.78	On Grade
9	906	Curb Inlet	57+80.00	25.50	Lt	Clear Creek Pkwy	837.01	5.00	4.00	6.50	Standard	836.95	On Grade
9	905	Curb Inlet	57+80.00	25.50	Rt	Clear Creek Pkwy	837.01	5.00	4.00	7.00	Standard	836.95	On Grade
9	904	30° Wingwalls & Apron	60+29.54	51.38	Lt	Clear Creek Pkwy	833.93	5.20	8.00	3.00	Special	#N/A	Sump
9	903	Curb Inlet	60+29.54	25.50	Lt	Clear Creek Pkwy	833.93	12.00	4.00	7.50	Standard	833.87	Sump
9	902	Curb Inlet	60+29.54	25.50	Rt	Clear Creek Pkwy	833.93	12.00	4.00	7.50	Standard	833.87	Sump
9	901	30° Wingwalls & Apron	60+29.54	54.89	Rt	Clear Creek Pkwy	833.95	5.20	14.18	3.00	Special	#N/A	On Grade
9	900B	30° Wingwalls & Apron	+45.77	16.64	Lt	South Cart Path	825.15	5.20	13.17	3.00	Special	#N/A	On Grade
9	900A	30° Wingwalls & Apron	+44.93	8.64	Rt	South Cart Path	825.15	5.20	13.17	3.00	Special	#N/A	On Grade
10	1003	Curb Inlet	61+97.14	27.12	Lt	Clear Creek Pkwy	835.61	5.00	4.00	5.00	Standard	835.54	On Grade
10	1002	Curb Inlet	61+97.28	23.82	Rt	Clear Creek Pkwy	835.62	5.00	4.00	6.00	Standard	835.55	On Grade
10	1001	End Section	61+97.41	58.39	Rt	Clear Creek Pkwy	835.62	6.08	2.88	1.44	#N/A	831.82	On Grade
10	1000B	End Section	18+45.55	42.05	Lt.	Recreational Trail	832.90	6.00	3.42	1.71	#N/A	826.93	On Grade
10	1000A	End Section	18+00.45	24.40	Rt	Recreational Trail	830.73	6.00	3.42	1.71	#N/A	826.85	On Grade

Inlet Capacity Calculations

LN	SN	Street Longitudinal Slope Sl %	Maximum Flow Completely Captured Qco cfs	Upper Limit on Captured Flow Qca cfs	100% Capacity Storm 1 5 Year Qc100(5yr) cfs	100% Storm 2 10 Year Qc100(10yr) cfs	100% Storm 3 25 Year Qc100(25yr) cfs	100% Storm 4 50 Year Qc100(50yr) cfs	100% Storm 5 100 Year Qc100(100yr) cfs	80% Capacity Storm 1 5 Year Qc(5yr) cfs	80% Storm 2 10 Year Qc(10yr) cfs	80% Storm 3 25 Year Qc(25yr) cfs	80% Storm 4 50 Year Qc(50yr) cfs	80% Storm 5 100 Year Qc(100yr) cfs	Downstream Bypass Storm 1 5 Year Qdbp(5yr) cfs	Bypass Storm 2 10 Year Qdbp(10yr) cfs	Bypass Storm 3 25 Year Qdbp(25yr) cfs	Bypass Storm 4 50 Year Qdbp(50yr) cfs	Bypass Storm 5 100 Year Qdbp(100yr) cfs	To Structure Number SNdbp #
1	102	0.034	5.42	54.23	15.52	15.52	15.52	15.52	15.52	12.42	12.42	12.42	12.42	12.42	0.00	0.00	0.00	0.00	0.00	#N/A
1	101	0.600	#N/A	#N/A	#N/A	#N/A	#N/A	#N/A	#N/A	#N/A	#N/A	#N/A	#N/A	#N/A	#N/A	#N/A	#N/A	#N/A	#N/A	#N/A
2	210	2.300	0.66	7.71	0.98	1.14	1.58	1.98	2.34	#N/A	#N/A	#N/A	#N/A	#N/A	0.01	0.02	0.07	0.14	0.24	208
2	209	3.330	0.26	4.95	1.54	1.70	2.06	2.36	2.60	#N/A	#N/A	#N/A	#N/A	#N/A	0.21	0.28	0.47	0.68	0.91	#N/A
2	208	4.340	0.48	8.06	1.38	1.56	1.98	2.34	2.68	#N/A	#N/A	#N/A	#N/A	#N/A	0.06	0.08	0.17	0.28	0.40	202
2	207	2.300	0.66	7.71	2.20	2.45	2.98	3.43	3.80	#N/A	#N/A	#N/A	#N/A	#N/A	0.20	0.27	0.50	0.75	1.01	210
2	206	2.300	0.66	7.71	2.43	2.69	3.26	3.75	4.13	#N/A	#N/A	#N/A	#N/A	#N/A	0.27	0.37	0.65	0.97	1.31	205
2	205	2.300	0.66	7.71	1.24	1.45	1.95	2.44	2.87	#N/A	#N/A	#N/A	#N/A	#N/A	0.03	0.05	0.14	0.27	0.44	204
2	204	4.340	0.48	8.06	1.34	1.52	1.95	2.37	2.74	#N/A	#N/A	#N/A	#N/A	#N/A	0.05	0.08	0.17	0.29	0.43	203
2	203	3.260	0.55	9.30	3.08	3.46	4.27	4.99	5.55	#N/A	#N/A	#N/A	#N/A	#N/A	0.46	0.63	1.13	1.76	2.41	302
2	202	3.260	0.55	9.30	1.26	1.43	1.85	2.23	2.57	#N/A	#N/A	#N/A	#N/A	#N/A	0.03	0.05	0.11	0.19	0.28	303
2	201	2.370	0.65	8.70	#N/A	#N/A	#N/A	#N/A	#N/A	#N/A	#N/A	#N/A	#N/A	#N/A	#N/A	#N/A	#N/A	#N/A	#N/A	#N/A
3	304	1.000	1.00	16.80	#N/A	#N/A	#N/A	#N/A	#N/A	#N/A	#N/A	#N/A	#N/A	#N/A	#N/A	#N/A	#N/A	#N/A	#N/A	#N/A
3	303	1.000	1.00	20.20	1.06	1.22	1.60	1.96	2.29	#N/A	#N/A	#N/A	#N/A	#N/A	0.00	0.00	0.01	0.03	0.05	407
3	302	1.000	1.00	20.20	2.33	2.73	3.71	4.71	5.59	#N/A	#N/A	#N/A	#N/A	#N/A	0.05	0.08	0.21	0.41	0.66	406
3	301	1.000	1.00	17.16	#N/A	#N/A	#N/A	#N/A	#N/A	#N/A	#N/A	#N/A	#N/A	#N/A	#N/A	#N/A	#N/A	#N/A	#N/A	#N/A
4	411	2.620	0.62	12.48	2.80	3.27	4.32	5.33	6.16	#N/A	#N/A	#N/A	#N/A	#N/A	0.23	0.35	0.73	1.29	1.92	403
4	410	2.620	0.62	7.23	0.86	0.96	1.22	1.44	1.63	#N/A	#N/A	#N/A	#N/A	#N/A	0.00	0.01	0.03	0.06	0.09	402
4	409	3.360	0.55	11.02	2.79	3.21	4.14	5.00	5.71	#N/A	#N/A	#N/A	#N/A	#N/A	0.28	0.41	0.81	1.35	1.94	403
4	408	3.330	0.26	4.95	2.35	2.56	3.00	3.34	3.59	#N/A	#N/A	#N/A	#N/A	#N/A	0.67	0.87	1.37	1.92	2.47	409
4	407	3.360	0.55	9.17	1.81	2.03	2.51	2.96	3.31	#N/A	#N/A	#N/A	#N/A	#N/A	0.10	0.14	0.27	0.41	0.56	409
4	406	3.360	0.55	9.17	0.81	0.93	1.28	1.66	2.04	#N/A	#N/A	#N/A	#N/A	#N/A	0.00	0.01	0.03	0.08	0.14	405
4	405	3.360	0.55	9.17	0.75	0.86	1.11	1.36	1.58	#N/A	#N/A	#N/A	#N/A	#N/A	0.00	0.01	0.02	0.04	0.07	402
4	404	0.001	31.62	638.78	#N/A	#N/A	#N/A	#N/A	#N/A	#N/A	#N/A	#N/A	#N/A	#N/A	#N/A	#N/A	#N/A	#N/A	#N/A	#N/A
4	403	0.200	2.24	45.17	38.80	38.80	38.80	38.80	38.80	31.04	31.04	31.04	31.04	31.04	0.00	0.00	0.00	0.00	0.00	#N/A
4	402	0.200	2.24	45.17	38.80	38.80	38.80	38.80	38.80	31.04	31.04	31.04	31.04	31.04	0.00	0.00	0.00	0.00	0.00	#N/A
4	401	0.450	1.49	25.68	#N/A	#N/A	#N/A	#N/A	#N/A	#N/A	#N/A	#N/A	#N/A	#N/A	#N/A	#N/A	#N/A	#N/A	#N/A	#N/A
5	507	5.000	0.13	3.21	1.47	1.61	1.89	2.11	2.27	#N/A	#N/A	#N/A	#N/A	#N/A	0.42	0.54	0.85	1.19	1.53	506
5	506	5.000	0.19	3.73	2.26	2.46	2.83	3.08	3.26	#N/A	#N/A	#N/A	#N/A	#N/A	1.04	1.36	2.19	3.13	4.06	411
5	505	0.580	1.31	22.06	0.32	0.36	0.46	0.56	0.64	#N/A	#N/A	#N/A	#N/A	#N/A	0.00	0.00	0.00	0.00	0.00	411
5	504	0.580	1.31	15.36	0.05	0.06	0.07	0.09	0.10	#N/A	#N/A	#N/A	#N/A	#N/A	0.00	0.00	0.00	0.00	0.00	410
6	620	2.000	#N/A	#N/A	#N/A	#N/A	#N/A	#N/A	#N/A	#N/A	#N/A	#N/A	#N/A	#N/A	#N/A	#N/A	#N/A	#N/A	#N/A	#N/A
6	619	2.000	0.71	11.88	0.90	1.02	1.29	1.54	1.75	#N/A	#N/A	#N/A	#N/A	#N/A	0.00	0.00	0.02	0.03	0.05	620
6	618	2.000	0.71	11.88	1.13	1.28	1.62	1.88	2.06	#N/A	#N/A	#N/A	#N/A	#N/A	0.01	0.02	0.04	0.07	0.09	620
6	617	5.000	0.13	3.21	31.04	31.04	31.04	31.04	31.04	24.83	24.83	24.83	24.83	24.83	0.00	0.00	0.00	0.00	0.00	#N/A
6	616	5.000	0.00	2.17	#N/A	#N/A	#N/A	#N/A	#N/A	#N/A	#N/A	#N/A	#N/A	#N/A	#N/A	#N/A	#N/A	#N/A	#N/A	#N/A
6	615	10.000	0.00	1.34	#N/A	#N/A	#N/A	#N/A	#N/A	#N/A	#N/A	#N/A	#N/A	#N/A	#N/A	#N/A	#N/A	#N/A	#N/A	#N/A
6	614	6.000	0.00	1.91	#N/A	#N/A	#N/A	#N/A	#N/A	#N/A	#N/A	#N/A	#N/A	#N/A	#N/A	#N/A	#N/A	#N/A	#N/A	#N/A
6	613	5.700	0.18	3.40	1.99	2.15	2.45	2.67	2.82	#N/A	#N/A	#N/A	#N/A	#N/A	0.85	1.08	1.66	2.29	2.89	612
6	612	5.420	0.43	8.68	2.71	3.13	4.04	4.80	5.44	#N/A	#N/A	#N/A	#N/A	#N/A	0.39	0.57	1.14	1.86	2.69	611
6	611	2.620	0.62	12.48	1.90	2.25	3.14	4.04	4.86	#N/A	#N/A	#N/A	#N/A	#N/A	0.07	0.12	0.31	0.61	1.00	605
6	610	5.530	0.43	4.98	1.93	2.13	2.55	2.86	3.11	#N/A	#N/A	#N/A	#N/A	#N/A	0.32	0.43	0.73	1.04	1.36	612
6	609	6.090	0.41	4.74	1.10	1.23	1.52	1.76	1.96	#N/A	#N/A	#N/A	#N/A	#N/A	0.06	0.09	0.17	0.27	0.37	608
6	608	5.420	0.43	8.68	0.66	0.77	1.03	1.28	1.50	#N/A	#N/A	#N/A	#N/A	#N/A	0.00	0.01	0.02	0.05	0.08	607
6	607	2.620	0.62	10.38	0.81	0.93	1.17	1.42	1.64	#N/A	#N/A	#N/A	#N/A	#N/A	0.00	0.00	0.02	0.04	0.06	604
6	606	0.290	1.86	31.20	31.04	31.04	31.04	31.04	31.04	24.83	24.83	24.83	24.83	24.83	0.00	0.00	0.00	0.00	0.00	#N/A
6	605	0.010	10.00	202.00	38.80	38.80	38.80	38.80	38.80	31.04	31.04	31.04	31.04	31.04	0.00	0.00	0.00	0.00	0.00	#N/A
6	604	0.010	10.00	202.00	38.80	38.80	38.80	38.80	38.80	31.04	31.04	31.04	31.04	31.04	0.00	0.00	0.00	0.00	0.00	#N/A
6	603	0.990	1.01	16.52	#N/A	#N/A	#N/A	#N/A	#N/A	#N/A	#N/A	#N/A	#N/A	#N/A	#N/A	#N/A	#N/A	#N/A	#N/A	#N/A
6	602	1.000	1.00	20.20	#N/A	#N/A	#N/A	#N/A	#N/A	#N/A	#N/A	#N/A	#N/A	#N/A	#N/A	#N/A	#N/A	#N/A	#N/A	#N/A
6	601	2.710	0.21	5.01	#N/A	#N/A	#N/A	#N/A	#N/A	#N/A	#N/A	#N/A	#N/A	#N/A	#N/A	#N/A	#N/A	#N/A	#N/A	#N/A
7	706	0.990	1.01	11.76	0.68	0.78	1.00	1.19	1.36	#N/A	#N/A	#N/A	#N/A	#N/A	0.00	0.00	0.00	0.00	0.01	703
7	705	0.990	1.01	11.76	1.62	1.83	2.30	2.71	3.05	#N/A	#N/A	#N/A	#N/A	#N/A	0.02	0.03	0.08	0.15	0.22	702
7	704	1.460	0.83	11.09	#N/A	#N/A	#N/A	#N/A	#N/A	#N/A	#N/A	#N/A	#N/A	#N/A	#N/A	#N/A	#N/A	#N/A	#N/A	#N/A
7	703	1.460	0.83	16.72	1.23	1.39	1.76	2.09	2.38	#N/A	#N/A	#N/A	#N/A	#N/A	0.00	0.01	0.03	0.05	0.08	806
7	702	1.460	0.83	16.72	1.42	1.62	2.08	2.52	2.90	#N/A	#N/A	#N/A	#N/A	#N/A	0.01	0.02	0.05	0.10	0.15	805
7	701	1.460	0.83	11.09	#N/A	#N/A	#N/A	#N/A	#N/A	#N/A	#N/A	#N/A	#N/A	#N/A	#N/A	#N/A	#N/A	#N/A	#N/A	#N/A
8	806	1.460	0.83	9.68	2.27	2.55	3.14	3.65	4.09	#N/A	#N/A	#N/A	#N/A	#N/A	0.13	0.19	0.37	0.58	0.80	803
8	805	1.460	0.83	9.68	1.09	1.24	1.59	1.93	2.20	#N/A	#N/A	#N/A	#N/A	#N/A	0.00	0.01	0.03	0.07	0.12	802
8	804	1.460	0.83	13.61	#N/A	#N/A	#N/A	#N/A	#N/A	#N/A	#N/A	#N/A	#N/A	#N/A	#N/A	#N/A	#N/A	#N/A	#N/A	#N/A
8	803	1.460	0.83	13.90	0.62	0.75	1.09	1.43	1.75	#N/A	#N/A	#N/A	#N/A	#N/A	0.00	0.00	0.00	0.01	0.03	908
8	802	1.460	0.83	13.90	0.56	0.64	0.84	1.04	1.22	#N/A	#N/A	#N/A	#N/A	#N/A	0.00	0.00	0.00	0.00	0.01	907
8	801	1.460	0.83	14.14	#N/A	#N/A	#N/A	#N/A	#N/A	#N/A	#N/A	#N/A	#N/A	#N/A	#N/A	#N/A	#N/A	#N/A	#N/A	#N/A
9	908	1.460	0.83	9.68	1.94	2.18	2.69	3.14	3.53	#N/A	#N/A	#N/A	#N/A	#N/A	0.08	0.11	0.23	0.37	0.52	906
9	907	1.460	0.83	9.68	1.48	1.68	2.10	2.48	2.79	#N/A	#N/A	#N/A	#N/A	#N/A	0.03	0.04	0.10	0.17	0.25	905
9	906	1.460	0.83	9.68	1.39	1.59	2.06	2.50	2.89	#N/A	#N/A	#N/A	#N/A	#N/A	0.02	0.03	0.10	0.18	0.28	903
9	905	1.460	0.83	9.68	1.51	1.71	2.18	2.61	2.97	#N/A	#N/A	#N/A	#N/A	#N/A	0.03	0.05	0.12	0.21	0.31	902
9	904	0.001	31.62	380.74	#N/A	#N/A	#N/A	#N/A	#N/A	#N/A	#N/A	#N/A	#N/A	#N/A	#N/A	#N/A	#N/A	#N/A	#N/A	#N/A
9	903	0.010	10.00	236.00	46.56	46.56	46.56	46.56	46.56	37.25	37.25	37.25	37.25	37.25	0.00	0.00	0.00	0.00	0.00	#N/A
9	902	0.010	10.00	236.00	46.56	46.56	46.56	46.56	46.56	37.25	37.25	37.25	37.25	37.25	0.00	0.00	0.00	0.00	0.00	#N/A
9	901	0.420	1.54	18.58	#N/A	#N/A	#N/A	#N/A	#N/A	#N/A	#N/A	#N/A	#N/A	#N/A	#N/A	#N/A	#N/A	#N/A	#N/A	#N/A
9	900B	0.001	#N/A	#N/A	#N/A	#N/A	#N/A	#N/A	#N/A	#N/A	#N/A	#N/A	#N/A	#N/A	#N/A	#N/A	#N/A	#N/A	#N/A	#N/A
9	900A	0.001	#N/A	#N/A	#N/A	#N/A	#N/A	#N/A	#N/A	#N/A	#N/A	#N/A	#N/A	#N/A	#N/A	#N/A	#N/A	#N/A	#N/A	#N/A
10	1003	1.430	0.84	9.78	1.54	1.74	2.18	2.55	2.87	#N/A	#N/A	#N/A	#N/A	#N/A	0.03	0.05	0.11	0.19	0.27	903
10	1002	1.430	0.84	9.78	1.63	1.83	2.29	2.70	3.02	#N/A	#N/A	#N/A	#N/A	#N/A	0.04	0.06	0.13	0.22	0.32	902
10	1001	1.430	0.84	11.32	#N/A	#N/A	#N/A	#N/A	#N/A	#N/A	#N/A	#N/A	#N/A	#N/A	#N/A	#N/A	#N/A	#N/A	#N/A	#N/A
10	1000B	4.500	#N/A	#N/A	#N/A	#N/A	#N/A	#N/A	#N/A	#N/A	#N/A	#N/A	#N/A	#N/A	#N/A	#N/A	#N/A	#N/A	#N/A	#N/A
10	1000A	4.500	#N/A	#N/A	#N/A	#N/A	#N/A	#N/A	#N/A	#N/A	#N/A	#N/A	#N/A	#N/A	#N/A	#N/A	#N/A	#N/A	#N/A	#N/A

Gutter Spread Calculations (25yr Only)

LN	SN	Street Information Cross Slope Sx %	Roughness Coefficient Ns #	Curb Information Type Ct text	Gutter Width Cgw feet	Gutter Slope Cgs %	On Grade Spread Cgsog feet	In Sump Sump Inlet Flow Depth Cgids inches	Gutter Lip Flow Depth Cglds inches	Max. Spread At Sump Cgss feet	Max. Percent Flow At Wings Cgpfws %	Max. Flow At Wings Cgfws cfs	Min. Street Slope At Wings Cgssws %	Max. Spread At Wings Cgsws feet	Comments text
1	102	2.083	0.013	A	0.375	11.111	0.00								Exception-Shallow Area Inlet
1	101	2.083	0.013	E	#N/A	#N/A	#N/A								
2	210	2.083	0.013	A	0.375	11.111	6.69								
2	209	2.083	0.013	B	1.417	8.824	6.99								
2	208	2.083	0.013	A	0.375	11.111	6.56								
2	207	2.083	0.013	A	0.375	11.111	8.87								
2	206	2.083	0.013	A	0.375	11.111	9.26								
2	205	2.083	0.013	A	0.375	11.111	7.32								
2	204	2.083	0.013	A	0.375	11.111	6.53								
2	203	2.083	0.013	A	0.375	11.111	9.79								
2	202	2.083	0.013	A	0.375	11.111	6.69								
2	201	2.083	0.013	A	0.375	11.111	0.00								
3	304	2.083	0.013	A	0.375	11.111	0.00								Canyon Lakes Outlet Control Structure, Rotate 11° Rt., +Special Structure De
3	303	2.083	0.013	A	0.375	11.111	7.76								Special Structure Design Required
3	302	2.083	0.013	A	0.375	11.111	10.84								Special Structure Design Required
3	301	2.083	0.013	A	0.375	11.111	0.00								
4	411	2.083	0.013	A	0.375	11.111	9.95								
4	410	2.083	0.013	A	0.375	11.111	5.88								
4	409	2.083	0.013	A	0.375	11.111	9.43								
4	408	2.083	0.013	B	1.417	8.824	8.77								
4	407	2.083	0.013	A	0.375	11.111	7.59								
4	406	2.083	0.013	A	0.375	11.111	5.71								
4	405	2.083	0.013	A	0.375	11.111	5.40								
4	404	2.083	0.013	A	0.375	11.111	0.00								Canyon Lakes Outlet Control Structure, Special Structure Design Req.
4	403	2.083	0.013	A	0.375	11.111	18.32	5.08	4.58	18.32	60	2.18	0.200	11.77	Special Structure Design Required
4	402	2.083	0.013	A	0.375	11.111	18.12	5.03	4.53	18.12	50	1.16	0.200	9.28	Special Structure Design Required
4	401	2.083	0.013	A	0.375	11.111	0.00								
5	507	2.083	0.013	B	1.417	8.824	6.63								Canyon Lakes Future Structure
5	506	2.083	0.013	B	1.417	8.824	8.54								
5	505	2.083	0.013	A	0.375	11.111	5.36								
5	504	2.083	0.013	A	0.375	11.111	2.57								
6	620	2.083	0.013	A	0.375	11.111	#N/A								Remaining Sheet & Bypass Flow Running Off Pavement
6	619	2.083	0.013	A	0.375	11.111	6.30								
6	618	2.083	0.013	A	0.375	11.111	6.89								
6	617	2.083	0.013	B	1.417	8.824	15.24	5.31	3.81	15.24	80	4.58	1.000	11.34	Canyon Lakes Future Structure
6	616	2.083	0.013	B	1.417	8.824	0.00								Canyon Lakes Future Structure
6	615	2.083	0.013	B	1.417	8.824	0.00								Canyon Lakes Future Structure
6	614	2.083	0.013	B	1.417	8.824	0.00								Canyon Lakes Future Structure
6	613	2.083	0.013	B	1.417	8.824	7.66								
6	612	2.083	0.013	A	0.375	11.111	8.76								
6	611	2.083	0.013	A	0.375	11.111	8.62								
6	610	2.083	0.013	A	0.375	11.111	7.35								
6	609	2.083	0.013	A	0.375	11.111	5.62								
6	608	2.083	0.013	A	0.375	11.111	4.79								
6	607	2.083	0.013	A	0.375	11.111	5.77								
6	606	2.083	0.013	A	0.375	11.111	0.00								2 Openings W & E, Rotate 10.50° Lt
6	605	2.083	0.013	A	0.375	11.111	18.08	5.02	4.52	18.08	75	1.20	0.020	14.49	
6	604	2.083	0.013	A	0.375	11.111	18.08	5.02	4.52	18.08	50	0.99	0.019	13.61	
6	603	2.083	0.013	A	0.375	11.111	0.00								
6	602	2.083	0.013	A	0.375	11.111	0.00								Rotate 4.5° Lt, Special Structure Design Required
6	601	2.083	0.013	B	1.417	8.824	0.00								
7	706	2.083	0.013	A	0.375	11.111	6.49								
7	705	2.083	0.013	A	0.375	11.111	9.01								
7	704	2.083	0.013	A	0.375	11.111	0.00								
7	703	2.083	0.013	A	0.375	11.111	7.52								
7	702	2.083	0.013	A	0.375	11.111	8.03								
7	701	2.083	0.013	A	0.375	11.111	0.00								
8	806	2.083	0.013	A	0.375	11.111	9.69								
8	805	2.083	0.013	A	0.375	11.111	7.24								
8	804	2.083	0.013	A	0.375	11.111	0.00								
8	803	2.083	0.013	A	0.375	11.111	6.23								
8	802	2.083	0.013	A	0.375	11.111	5.65								
8	801	2.083	0.013	A	0.375	11.111	0.00								
9	908	2.083	0.013	A	0.375	11.111	9.04								
9	907	2.083	0.013	A	0.375	11.111	8.13								
9	906	2.083	0.013	A	0.375	11.111	8.07								
9	905	2.083	0.013	A	0.375	11.111	8.26								
9	904	2.083	0.013	A	0.375	11.111	0.00								Special 30° Wingwalls & Apron Design Required
9	903	2.083	0.013	A	0.375	11.111	18.12	5.03	4.53	18.12	60	1.72	0.210	10.67	
9	902	2.083	0.013	A	0.375	11.111	18.08	5.02	4.52	18.08	60	1.35	0.210	9.74	
9	901	2.083	0.013	A	0.375	11.111	0.00								Special 30° Wingwalls & Apron Design Required
9	900B	1.500	#N/A	#N/A	#N/A	#N/A	#N/A								Special 30° Wingwalls & Apron Design Required
9	900A	1.500	#N/A	#N/A	#N/A	#N/A	#N/A								Special 30° Wingwalls & Apron Design Required
10	1003	2.083	0.013	A	0.375	11.111	8.28								Existing Structure F2 By KDOT (To Remain)
10	1002	2.083	0.013	A	0.375	11.111	8.46								Existing Structure F1 By KDOT (To Remain)
10	1001	2.083	0.013	A	0.375	11.111	0.00								Existing Structure By KDOT (To Remain)
10	1000B	1.500	#N/A	#N/A	#N/A	#N/A	#N/A								
10	1000A	1.500	#N/A	#N/A	#N/A	#N/A	#N/A								

Notes:

1 Information for Canyon Lakes future storm structures was obtained from coordination plans provided by Phelps Engineering, Inc. (PEI).
2 Canyon Lakes future structures were included in the analysis to assess and plan for the future impacts to Clear Creek Parkway's drainage system.
3 Lengths of pipe shown on the plans, profiles and calculations sheets are based on lineal feet measurements along pipe centerline from the structure inside face to structure inside face.
4 Lengths of pipe shown on the Summary Of Storm Drainage Quantities and Quantity Recapitulation sheets are based on lineal feet measurements along pipe centerline from the structure inside face to structure inside face rounded up to the nearest foot.

REV.	DATE	REVISIONS	BY	APP'D
5				
4				
3				
2				
1				

COPYRIGHT © -2016-SHAFER, KLINE & WARREN INC.

Designed By: PRP
Drawn By: JCK/JAA
Checked By: HDL
Issue Date: SEPT. 2016

SHAFER, KLINE & WARREN
11250 Corporate Avenue
Lenexa, KS 66219-1392
913.888.7800 FAX: 913.888.7868
SURVEYING | ENGINEERING | CONSTRUCTION

CLEAR CREEK PARKWAY
CITY OF SHAWNEE, KANSAS

DRAINAGE CALCULATIONS (2)

150561–010

LAYOUT: MODEL | BY: jadams | DATE: 20–SEP–2016 10:36:37 AM
L:\150561–010_Cad\Civil\Drainage Map And Calcs\150561–010_DRAIN–CALC–02.dgn

NOT FOR CONSTRUCTION

Pipe Capacity Calculations - Table III

Line Number LN #	Structure Number SN #	Type SNtype #	Station SNs stations	Offset (Location Point) Snoc feet	Side SNsd text	Name Sname text	CxA CAi acres	Additional CxA CAa acres	From Upstream Structure Number SNu #	Total CxA CAit acres	Storm 1 5 Year Tcu(5yr) minutes	Storm 2 10 Year Tcu(10yr) minutes	Storm 3 25 Year Tcu(25yr) minutes	Storm 4 50 Year Tcu(50yr) minutes	Storm 5 100 Year Tcu(100yr) minutes	From Upstream Structure Number SNtcu #	Storm 1 5 Year Ip(5yr) in/hr	Storm 2 10 Year Ip(10yr) in/hr	Storm 3 25 Year Ip(25yr) in/hr	Storm 4 50 Year Ip(50yr) in/hr	Storm 5 100 Year Ip(100yr) in/hr	Storm 1 5 Year Qp(5yr) cfs	Storm 2 10 Year Qp(10yr) cfs	Storm 3 25 Year Qp(25yr) cfs	Storm 4 50 Year Qp(50yr) cfs	Storm 5 100 Year Qp(100yr) cfs	Diameter Dp inches	Type Pt text	Class Pc text	Upper (This Struc.) Zpu feet	Lower (Next Struc.) Zpl feet	Difference DZp feet	Inside Face to Inside Face Length feet	Inside Face to Inside Face Slope %	Roughness Coefficient Np #	Capacity Qpc cfs	Velocity Vpc ft/sec	Comments text
											Controlling Upstream Structure Time						Rainfall Intensity Return Period/Frequency					Pipe Flow Runoff (Qp=KCIA)					Pipe Information			Flowline Elevations						Full Flow		
1	102	Area Inlet	49+28.11	14.69	Lt	Clare Road	0.26	0.00	#N/A	0.26	5.00	5.00	5.00	5.00	5.00	#N/A	6.47	7.35	8.53	9.40	10.32	1.68	1.91	2.44	2.93	3.35	15	RCP	III	924.03	923.62	0.41	143.77	0.285	0.013	3.44	2.80	
1	101	End Section	50+81.89	22.39	Lt	Clare Road	0.00	0.26	101	0.26	5.75	5.72	5.69	5.66	5.65	102	6.27	7.14	8.29	9.15	10.06	1.63	1.86	2.37	2.85	3.27	15	RCP	III	923.62	923.60	0.02	6.00	0.333	0.013	3.71	3.03	
2	210	Curb Inlet	16+18.00	25.50	Lt	Clear Creek Pkwy	0.12	0.00	#N/A	0.12	5.00	5.00	5.00	5.00	5.00	#N/A	6.47	7.35	8.53	9.40	10.32	0.78	0.88	1.13	1.35	1.55	15	RCP	III	907.52	907.29	0.23	47.00	0.489	0.013	4.50	3.67	
2	209	Curb Inlet	19+48.01	60.07	Rt	Clear Creek Pkwy	0.30	0.00	#N/A	0.30	7.74	7.74	7.74	7.74	7.74	#N/A	5.80	6.59	7.65	8.46	9.30	1.74	1.98	2.52	3.05	3.49	15	RCP	III	898.30	898.07	0.23	46.39	0.496	0.013	4.53	3.69	
2	208	Curb Inlet	19+15.00	25.50	Lt	Clear Creek Pkwy	0.22	0.00	#N/A	0.22	5.00	5.00	5.00	5.00	5.00	#N/A	6.47	7.35	8.53	9.40	10.32	1.42	1.62	2.06	2.48	2.84	15	RCP	III	899.37	898.07	1.30	47.00	2.766	0.013	10.70	8.72	
2	207	Curb Inlet	14+50.00	25.50	Lt	Clear Creek Pkwy	0.39	0.00	#N/A	0.39	6.40	6.40	6.40	6.40	6.40	#N/A	6.11	6.94	8.06	8.89	9.77	2.38	2.71	3.46	4.16	4.76	15	RCP	III	911.39	911.12	0.27	47.00	0.574	0.013	4.88	3.97	
2	206	Curb Inlet	14+50.00	25.50	Rt	Clear Creek Pkwy	0.52	0.39	207	0.91	6.62	6.61	6.60	6.59	6.59	207	6.06	6.89	7.99	8.83	9.70	5.51	6.27	8.00	9.64	11.03	18	RCP	III	910.87	907.04	3.83	163.00	2.350	0.013	16.05	9.08	
2	205	Curb Inlet	16+18.00	25.50	Rt	Clear Creek Pkwy	0.15	1.03	206 & 210	1.18	6.96	6.94	6.91	6.89	6.88	206	5.98	6.80	7.90	8.73	9.60	7.06	8.02	10.25	12.36	14.16	18	RCP	III	906.54	897.82	8.72	295.73	2.949	0.013	17.98	10.17	
2	204	Curb Inlet	19+15.00	25.75	Rt	Clear Creek Pkwy	0.21	1.70	205, 208 & 209	1.91	7.98	7.97	7.96	7.95	7.94	209	5.75	6.54	7.59	8.40	9.23	10.98	12.49	15.95	19.25	22.04	21	RCP	III	897.57	886.68	10.89	286.67	3.799	0.013	30.80	12.80	
2	203	Curb Inlet	22+00.00	26.00	Rt	Clear Creek Pkwy	0.61	1.91	204	2.52	8.40	8.38	8.34	8.31	8.29	204	5.66	6.44	7.48	8.29	9.11	14.26	16.23	20.73	25.07	28.70	30	RCP	III	885.93	885.69	0.24	47.00	0.511	0.013	29.27	5.96	
2	202	Curb Inlet	22+00.00	26.00	Lt	Clear Creek Pkwy	0.19	2.52	203	2.71	8.54	8.51	8.47	8.43	8.41	203	5.63	6.41	7.44	8.25	9.07	15.26	17.37	22.18	26.83	30.72	30	RCP	III	885.19	884.91	0.28	48.69	0.575	0.013	31.05	6.33	
2	201	End Section	22+45.36	80.12	Lt	Clear Creek Pkwy	0.00	2.71	202	2.71	8.68	8.65	8.60	8.56	8.53	202	5.60	6.38	7.41	8.22	9.04	15.18	17.29	22.09	26.73	30.62	30	RCP	III	884.91	884.87	0.04	6.00	0.667	0.013	33.45	6.81	
3	304	Outlet Control Structure	24+48.33	65.55	Lt	Clear Creek Pkwy	16.31	0.00	#N/A	16.31	10.80	10.80	10.80	10.80	10.80	#N/A	5.20	5.91	6.86	7.61	8.37	122.04	149.45	179.99	208.13	241.87	54	RCP	III	875.34	874.64	0.70	35.37	1.979	0.013	276.75	17.40	
3	303	Curb Inlet	24+52.66	25.50	Lt	Clear Creek Pkwy	0.16	16.31	304	16.47	10.84	10.84	10.83	10.83	10.83	304	5.20	5.90	6.85	7.61	8.36	122.04	149.45	179.99	208.13	241.87	54	RCP	III	874.14	873.19	0.95	47.42	2.003	0.013	278.42	17.51	
3	302	Curb Inlet	24+59.73	25.50	Rt	Clear Creek Pkwy	0.30	16.47	303	16.77	10.89	10.88	10.87	10.87	10.87	303	5.19	5.90	6.84	7.60	8.35	122.04	149.45	179.99	208.13	241.87	54	RCP	III	872.69	871.51	1.18	58.57	2.015	0.013	279.25	17.56	
3	301	End Section	24+76.05	101.03	Rt	Clear Creek Pkwy	0.00	16.77	302	16.77	10.96	10.95	10.94	10.93	10.93	302	5.17	5.88	6.83	7.58	8.33	122.04	149.45	179.99	208.13	241.87	54	RCP	III	871.51	871.35	0.16	8.21	1.949	0.013	274.64	17.27	
4	411	Curb Inlet	31+00.00	25.50	Lt	Clear Creek Pkwy	0.37	0.00	#N/A	0.37	10.10	10.10	10.10	10.10	10.10	#N/A	5.33	6.06	7.02	7.79	8.56	1.97	2.24	2.86	3.46	3.96	15	RCP	III	872.69	872.45	0.24	47.00	0.504	0.013	4.57	3.72	
4	410	Curb Inlet	31+00.00	25.50	Rt	Clear Creek Pkwy	0.13	1.23	411 & 504	1.36	10.34	10.33	10.32	10.31	10.30	504	5.28	6.01	6.97	7.74	8.50	7.18	8.17	10.43	12.63	14.45	18	RCP	III	871.70	863.36	8.34	123.04	6.778	0.013	27.26	15.43	
4	409	Curb Inlet	27+87.00	25.50	Lt	Clear Creek Pkwy	0.37	0.00	#N/A	0.37	5.80	5.80	5.80	5.80	5.80	#N/A	6.26	7.11	8.25	9.10	10.00	2.32	2.63	3.36	4.04	4.63	15	RCP	III	874.17	873.65	0.52	47.00	1.106	0.013	6.77	5.51	
4	408	Curb Inlet	26+93.18	59.02	Lt	Clear Creek Pkwy	0.52	0.00	#N/A	0.52	7.50	7.50	7.50	7.50	7.50	#N/A	5.86	6.65	7.72	8.53	9.38	3.05	3.46	4.42	5.32	6.10	18	RCP	III	876.80	876.60	0.20	45.04	0.444	0.013	6.98	3.95	
4	407	Curb Inlet	26+62.00	25.50	Lt	Clear Creek Pkwy	0.32	0.52	408	0.84	7.69	7.68	7.67	7.67	7.66	408	5.81	6.61	7.67	8.48	9.32	4.88	5.55	7.09	8.55	9.79	18	RCP	III	876.10	875.68	0.42	47.00	0.894	0.013	9.90	5.60	
4	406	Curb Inlet	26+62.00	25.50	Rt	Clear Creek Pkwy	0.12	0.84	407	0.96	7.84	7.83	7.81	7.80	7.79	407	5.78	6.57	7.63	8.44	9.28	5.55	6.31	8.06	9.72	11.14	18	RCP	III	875.18	873.40	1.78	110.44	1.612	0.013	13.29	7.52	
4	405	Curb Inlet	27+87.00	25.75	Rt	Clear Creek Pkwy	0.12	1.33	406 & 409	1.45	8.11	8.09	8.06	8.04	8.02	406	5.72	6.51	7.56	8.37	9.20	8.29	9.44	12.06	14.56	16.68	21	RCP	III	873.15	863.11	10.04	171.62	5.850	0.013	38.22	15.89	
4	404	Outlet Control Structure	29+67.62	73.95	Lt	Clear Creek Pkwy	37.82	0.00	#N/A	37.82	14.40	14.40	14.40	14.40	14.40	#N/A	4.64	5.27	6.11	6.81	7.49	272.44	333.78	402.15	465.16	540.73	72	RCP	III	858.58	857.97	0.61	41.95	1.454	0.013	511.37	18.09	
4	403	Curb Inlet	29+67.62	25.50	Lt	Clear Creek Pkwy	0.23	37.82	404	38.05	14.44	14.44	14.44	14.44	14.44	404	4.63	5.26	6.11	6.80	7.48	272.44	333.78	402.15	465.16	540.73	72	RCP	III	860.47	856.79	3.68	47.00	7.830	0.013	1186.67	41.97	
4	402	Curb Inlet	29+67.62	25.75	Rt	Clear Creek Pkwy	0.24	40.86	403, 405 & 410	41.10	14.46	14.46	14.46	14.46	14.46	403	4.63	5.26	6.10	6.80	7.47	272.44	333.78	402.15	465.16	540.73	72	RCP	III	855.29	854.20	1.09	77.02	1.415	0.013	504.46	17.84	
4	401	End Section	29+90.12	133.36	Rt	Clear Creek Pkwy	0.00	41.10	402	41.10	14.54	14.53	14.53	14.53	14.53	402	4.62	5.25	6.09	6.79	7.46	272.44	333.78	402.15	465.16	540.73	72	RCP	III	854.20	854.05	0.15	8.25	1.818	0.013	571.80	20.22	
5	507	Curb Inlet	+52.00	19.50	Lt	59th Place	0.31	0.00	#N/A	0.31	6.50	6.50	6.50	6.50	6.50	#N/A	6.09	6.92	8.02	8.86	9.73	1.89	2.15	2.73	3.30	3.77	15	RCP	III	887.90	877.25	10.65	185.01	5.756	0.013	15.44	12.58	
5	506	Curb Inlet	32+41.37	56.43	Lt	Clear Creek Pkwy	0.49	0.31	507	0.80	6.88	6.86	6.84	6.82	6.81	507	6.00	6.82	7.92	8.75	9.62	4.80	5.46	6.97	8.40	9.62	18	RCP	III	877.00	876.50	0.50	50.69	0.986	0.013	10.40	5.88	
5	505	Curb Inlet	32+83.19	25.50	Lt	Clear Creek Pkwy	0.05	0.80	506	0.85	7.05	7.02	6.99	6.97	6.95	506	5.96	6.78	7.87	8.70	9.57	5.07	5.76	7.36	8.87	10.17	18	RCP	III	876.00	875.55	0.45	47.00	0.957	0.013	10.24	5.80	
5	504	Curb Inlet	32+83.19	25.50	Rt	Clear Creek Pkwy	0.01	0.85	505	0.86	7.20	7.16	7.13	7.10	7.08	505	5.92	6.74	7.83	8.66	9.52	5.09	5.80	7.41	8.94	10.23	18	RCP	III	875.05	872.20	2.85	173.29	1.645	0.013	13.43	7.60	
6	620	#N/A	98+86.86	0.00	Lt	Gleason Road	0.09	0.00	#N/A	0.09	6.20	6.20	6.20	6.20	6.20	#N/A	6.16	7.00	8.12	8.96	9.85	0.55	0.63	0.80	0.97	1.11	#N/A	#N/A	#N/A	#N/A	#N/A	#N/A	#N/A	#N/A	#N/A	#N/A	#N/A	
6	619	Curb Inlet	99+09.21	27.26	Rt	Gleason Road	0.14	0.00	#N/A	0.14	5.85	5.85	5.85	5.85	5.85	#N/A	6.25	7.10	8.24	9.08	9.98	0.88	0.99	1.27	1.53	1.75	15	RCP	III	849.80	849.46	0.34	53.49	0.636	0.013	5.13	4.18	
6	618	Curb Inlet	99+10.13	29.87	Lt	Gleason Road	0.19	0.14	619	0.33	6.16	6.15	6.13	6.11	6.10	619	6.17	7.01	8.14	8.99	9.88	2.04	2.31	2.95	3.56	4.08	15	RCP	III	848.96	845.45	3.51	45.66	7.687	0.013	17.84	14.54	
6	617	Curb Inlet	4+35.00	0.00	Lt	59th Place	0.67	0.00	#N/A	0.67	7.40	7.40	7.40	7.40	7.40	#N/A	5.88	6.68	7.75	8.57	9.41	3.94	4.48	5.71	6.89	7.88	15	RCP	III	889.50	888.39	1.11	70.87	1.566	0.013	8.05	6.56	
6	616	Junction Box	3+85.00	54.50	Rt	59th Place	0.00	0.67	617	0.67	7.59	7.58	7.57	7.57	7.56	617	5.84	6.63	7.70	8.51	9.36	3.91	4.44	5.67	6.84	7.84	15	RCP	III	887.89	883.50	4.39	108.16	4.059	0.013	12.96	10.56	
6	615	Junction Box	3+80.00	166.49	Rt	59th Place	0.00	0.67	616	0.67	7.79	7.78	7.75	7.75	7.73	616	5.79	6.58	7.65	8.46	9.30	3.88	4.41	5.64	6.80	7.79	15	RCP	III	883.00	874.00	9.00	207.08	4.346	0.013	13.41	10.93	
6	614	Junction Box	6+85.00	18.37	Lt	Barth Road	0.00	0.67	615	0.67	8.17	8.14	8.09	8.07	8.04	615	5.71	6.50	7.55	8.36	9.20	3.83	4.36	5.56	6.72	7.71	15	RCP	III	873.50	867.46	6.04	90.76	6.655	0.013	16.60	13.53	
6	613	Curb Inlet	36+43.43	56.59	Lt	Clear Creek Pkwy	0.50	0.67	614	1.17	8.32	8.29	8.23	8.20	8.17	614	5.68	6.46	7.51	8.32	9.15	6.65	7.56	9.67	11.68	13.38	21	RCP	III	866.96	866.45	0.51	70.98	0.719	0.013	13.40	5.57	
6	612	Curb Inlet	37+38.00	25.50	Lt	Clear Creek Pkwy	0.30	0.00	#N/A	0.30	5.35	5.35	5.35	5.35	5.35	#N/A	6.38	7.25	8.41	9.26	10.18	1.91	2.18	2.78	3.33	3.82	15	RCP	III	859.17	858.93	0.24	47.00	0.511	0.013	4.60	3.75	
6	611	Curb Inlet	38+81.00	25.50	Lt	Clear Creek Pkwy	0.25	0.00	#N/A	0.25	5.90	5.90	5.90	5.90	5.90	#N/A	6.23	7.09	8.22	9.07	9.96	1.56	1.77	2.26	2.72	3.11	15	RCP	III	853.42	853.18	0.24	47.00	0.511	0.013	4.60	3.75	
6	610	Curb Inlet	35+75.00	25.75	Lt	Clear Creek Pkwy	0.36	1.17	613	1.53	8.59	8.55	8.48	8.44	8.40	613	5.62	6.40	7.44	8.25	9.08	8.60	9.79	12.52	15.15	17.37	21	RCP	III	865.95	865.29	0.66	54.20	1.218	0.013	17.44	7.25	
6	609	Curb Inlet	36+02.00	25.75	Rt	Clear Creek Pkwy	0.18	1.53	610	1.71	8.72	8.68	8.60	8.56	8.52	610	5.60	6.37	7.41	8.22	9.04	9.58	10.89	13.94	16.87	19.32	21	RCP	III	864.79	858.43	6.36	130.53	4.872	0.013	34.88	14.50	
6	608	Curb Inlet	37+38.00	25.75	Rt	Clear Creek Pkwy	0.09	2.01	609 & 612	2.10	8.91	8.86	8.77	8.72	8.67	609	5.56	6.33	7.36	8.17	8.99	11.68	13.29	17.00	20.59	23.60	21	RCP	III	857.93	852.68	5.25	139.85	3.754	0.013	30.62	12.73	
6	607	Curb Inlet	38+81.00	25.75	Rt	Clear Creek Pkwy	0.12	2.35	608 & 611	2.47	9.12	9.06	8.96	8.90	8.85	608	5.52	6.28	7.31	8.12	8.94	13.63	15.51	19.86	24.07	27.60	21	RCP	III	852.18	848.25	3.93	127.76	3.076	0.013	27.71	11.52	
6	606	Area Inlet	39+99.55	63.86	Lt	Clear Creek Pkwy	0.83	0.00	#N/A	0.83	5.92	5.92	5.92	5.92	5.92	#N/A	6.23	7.08	8.21	9.06	9.95	5.17	5.88	7.50	9.02	10.32	18	RCP	III	849.60	849.21	0.39	37.31	1.045	0.013	10.70	6.06	
6	605	Curb Inlet	40+14.37	25.50	Lt	Clear Creek Pkwy	0.14	0.83	606	0.97	6.03	6.03	6.02	6.02	6.02	606	6.20	7.05	8.18	9.02	9.91	6.01	6.84	8.73	10.50	12.02	21	RCP	III	848.96	848.25	0.71	44.46	1.597	0.013	19.97	8.30	
6	604	Curb Inlet	40+14.91	23.18	Rt	Clear Creek Pkwy	0.21	3.44	605 & 607	3.65	9.32	9.25	9.14	9.08	9.02	607	5.48	6.24	7.27	8.07	8.88	20.00	22.78	29.19	35.35	40.52	24	RCP	III	848.00	844.70	3.30	99.11	3.330	0.013	41.19	13.11	
6	603	End Section	42+47.44	145.43	Lt	Clear Creek Pkwy	7.00	0.00	#N/A	7.00	10.20	10.20	10.20	10.20	10.20	#N/A	5.31	6.03	7.00	7.77	8.53	85.60	106.84	130.73	153.01	180.02	60	RCP	III	842.64	841.34	1.30	259.54	0.501	0.013	184.48	9.40	
6	602	Junction Box	40+95.28	89.36	Rt	Clear Creek Pkwy	0.00	10.98	603, 604 & 618	10.98	10.65	10.62	10.60	10.59	10.58	603	5.23	5.95	6.90	7.67	8.43	85.60	106.84	130.73	153.01	180.02	60	RCP	III	841.12	840.88	0.24	47.64	0.504	0.013	185.03	9.42	
6	601	End Section	98+48.12	57.72	Lt	Gleason Road	0.00	10.98	602	10.98	10.74	10.71	10.68	10.67	10.66	602	5.21	5.93	6.89	7.65	8.40	85.60	106.84	130.73	153.01	180.02	60	RCP	III	840.88	840.84	0.04	8.21	0.487	0.013	181.89	9.26	
7	706	Curb Inlet	44+45.00	25.50	Lt	Clear Creek Pkwy	0.11	0.00	#N/A	0.11	5.00	5.00	5.00	5.00	5.00	#N/A	6.47	7.35	8.53	9.40	10.32	0.71	0.81	1.03	1.24	1.42	15	RCP	III	850.36	850.12	0.24	47.00	0.511	0.010	5.98	4.87	
7	705	Curb Inlet	44+45.00	25.50	Rt	Clear Creek Pkwy	0.26	0.11	706	0.37	5.26	5.26	5.23	5.22	5.21	706	6.40	7.27	8.45	9.31	10.24	2.37	2.69	3.44	4.13	4.74	15	RCP	III	849.62	847.62	2.00	296.37	0.675	0.013	5.29	4.31	
7	704	End Section	47+58.07	46.56	Lt	Clear Creek Pkwy	2.98	0.00	#N/A	2.98	9.75	9.75	9.75	9.75	9.75	#N/A	5.39	6.13	7.11	7.88	8.66	25.09	29.94	35.29	40.20	46.06	33.94	RCP	III	847.20	847.11	0.09	19.06	0.472	0.013	39.11	6.23	2-24" RCP's Modeled as 1-33.94" RCP
7	703	Curb Inlet	47+58.07	25.50	Lt	Clear Creek Pkwy	0.19	2.98	704	3.17	9.81	9.80	9.80	9.80	9.81	704	5.38	6.12	7.10	7.87	8.65	25.09	29.94	35.29	40.20	46.06	33.94	RCP	III	847.09	846.88	0.21	47.00	0.447	0.013	38.06	6.06	2-24" RCP's Modeled as 1-33.94" RCP
7	702	Curb Inlet	47+58.07	25.50	Rt	Clear Creek Pkwy	0.22	3.54	703 & 705	3.76	9.93	9.92	9.91	9.91	9.94	703	5.36	6.09	7.07	7.84	8.61	25.09	29.94	35.29	40.20	46.06	33.94	RCP	III	846.87	846.78	0.09	19.50	0.462	0.013	38.70	6.16	2-24" RCP's Modeled as 1-33.94" RCP
7	701	End Section	47+58.07	56.20	Rt	Clear Creek Pkwy	0.00	3.76	702	3.76	9.99	9.98	9.97	9.96	10.00	702	5.35	6.08	7.06	7.83	8.59	25.09	29.94	35.29	40.20	46.06	33.94	RCP	III	846.78	846.75	0.03	6.00	0.500	0.013	40.26	6.41	2-24" RCP's Modeled as 1-33.94" RCP
8	806	Curb Inlet	50+00.00	25.50	Lt	Clear Creek Pkwy	0.37	0.00	#N/A	0.37	5.00	5.00	5.00	5.00	5.00	#N/A	6.47	7.35	8.53	9.40	10.32	2.39	2.72	3.47	4.17	4.77	15	RCP	III	842.67	842.41	0.26	47.00	0.553	0.013	4.79	3.90	
8	805	Curb Inlet	50+00.00	25.50	Rt	Clear Creek Pkwy	0.17	0.37	806	0.54	5.22	5.21	5.20	5.19	5.19	806	6.41	7.29	8.46	9.32	10.24	3.46	3.94	5.03	6.04	6.91	15	RCP	III	841.91	840.43	1.48	113.50	1.304	0.013	7.35	5.99	
8	804	End Section	51+20.00	58.56	Lt	Clear Creek Pkwy	7.75	0.00	#N/A	7.75	12.50	12.50	12.50	12.50	12.50	#N/A	4.92	5.59	6.49	7.21	7.93	63.11	77.67	93.93	108.93	126.94	42	RCP	III	838.87	838.65	0.22	25.07	0.878	0.013	94.23	9.79	
8	803	Curb Inlet	51+20.00	25.50	Lt	Clear Creek Pkwy	0.08	7.75	804	7.83	12.55	12.55	12.55	12.55	12.55	804	4.91	5.58	6.48	7.20	7.91	63.11	77.67	93.93	108.93	126.94	42	RCP	III	838.62	838.22	0.40	47.00	0.851	0.013	92.77	9.64	
8	802	Curb Inlet	51+20.00	25.50	Rt	Clear Creek Pkwy	0.09	8.91	803 & 805	9.00	12.63	12.62	12.62	12.63	12.63	803	4.90	5.57	6.46	7.18	7.89	63.11	77.67	93.93	108.93	126.94	42	RCP	III	838.18	837.97	0.21	24.69	0.851	0.013	92.77	9.64	
8	801	End Section	51+20.00	66.45	Rt	Clear Creek Pkwy	0.00	9.00	802	9.00	12.68	12.67	12.67	12.68	12.68	802	4.89	5.56	6.45	7.17	7.88	63.11	77.67	93.93	108.93	126.94	42	RCP	III	837.97	837.90	0.07	8.17	0.857	0.013	93.10	9.68	
9	908	Curb Inlet	54+50.00	25.50	Lt	Clear Creek Pkwy	0.31	0.00	#N/A	0.31	5.00	5.00	5.00	5.00	5.00	#N/A	6.47	7.35	8.53	9.40	10.32	2.01	2.28	2.91	3.50	4.00	15	RCP	III	836.09	835.85	0.24	47.00	0.511	0.013	4.60	3.75	
9	907	Curb Inlet	54+50.00	25.50	Rt	Clear Creek Pkwy	0.23	0.31	908	0.54	5.23	5.23	5.22	5.21	5.20	908	6.41	7.28	8.45	9.32	10.24	3.46	3.93	5.02	6.04	6.91	15	RCP	III	835.35	831.01	4.34	325.28	1.334	0.013	7.43	6.06	
9	906	Curb Inlet	57+80.00	25.50	Lt	Clear Creek Pkwy	0.21	0.00	#N/A	0.21	5.00	5.00	5.00	5.00	5.00	#N/A	6.47	7.35	8.53	9.40	10.32	1.36	1.54	1.97	2.37	2.71	15	RCP	III	831.26	831.01	0.25	47.00	0.532	0.013	4.69	3.82	
9	905	Curb Inlet	57+80.00	25.50	Rt	Clear Creek Pkwy	0.23	0.75	906 & 907	0.98	6.15	6.12	6.05	6.01	5.99	907	6.17	7.02	8.17	9.03	9.93	6.05	6.88	8.81	10.62	12.16	21	RCP	III	830.51	828.80	1.71	245.91	0.695	0.013	13.17	5.48	
9	904	30° Wingwalls & Apron	60+29.54	51.38	Lt	Clear Creek Pkwy	15.54	0.00	#N/A	15.54	6.75	6.75	6.75	6.75	6.75	#N/A	6.03	6.85	7.95	8.78	9.64	116.55	136.53	158.59	178.81	203.00	66.33	RCP	III	827.77	827.69	0.08	23.88	0.335	0.013	197.18	8.22	1-8'x3' RCB Modeled as 1-66.33" RCP
9	903	Curb Inlet	60+29.54	25.50	Lt	Clear Creek Pkwy	0.28	15.54	904	15.82	6.81	6.81	6.81	6.80	6.80	904	6.01	6.83	7.93	8.76	9.62	116.55	136.53	158.59	178.81	203.00	66.33	RCP	III	827.68	827.54	0.14	47.00	0.298	0.013	185.97	7.75	1-8'x3' RCB Modeled as 1-66.33" RCP
9	902	Curb Inlet	60+29.54	25.50	Rt	Clear Creek Pkwy	0.30	16.80	903 & 905	17.10	6.95	6.91	6.91	6.89	6.91	903	5.98	6.81	7.90	8.73	9.58	116.55	136.53	158.59	178.81	204.77	66.33	RCP	III	827.53	827.47	0.06	22.19	0.270	0.013	177.02	7.38	1-8'x3' RCB Modeled as 1-66.33" RCP
9	901	30° Wingwalls & Apron	60+29.54	54.89	Rt	Clear Creek Pkwy	0.00	17.10	902	17.10	7.03	6.98	6.98	6.96	6.99	902	5.96	6.79	7.87	8.71	9.56	116.55	136.53	158.59	178.81	204.77	66.33	RCP	III	827.47	827.45	0.02	5.20	0.385	0.013	211.38	8.81	1-8'x3' RCB Modeled as 1-66.33" RCP
9	900B	30° Wingwalls & Apron	+45.77	16.64	Lt	South Cart Path	0.00	17.10	901	17.10	7.04	6.99	6.99	6.97	7.00	901	5.96	6.79	7.87	8.70	9.55	116.55	136.53	158.59	178.81	204.77	57.45	RCP	III	821.73	821.53	0.20	14.90	1.342	0.013	268.88	14.94	1-6'x3' RCB Modeled as 1-57.45" RCP
9	900A	30° Wingwalls & Apron	+44.93	8.64	Rt	South Cart Path	0.00	17.10	900B	17.10	7.05	7.00	7.00	6.98	7.01	900B	5.96	6.78	7.87	8.70	9.55	116.55	136.53	158.59	178.81	204.77	57.45	RCP	III	821.53	821.48	0.05	5.20	0.962	0.013	227.65	12.65	1-6'x3' RCB Modeled as 1-57.45" RCP
10	1003	Curb Inlet	61+97.14	27.12	Lt	Clear Creek Pkwy	0.24	0.00	#N/A	0.24	5.00	5.00	5.00	5.00	5.00	#N/A	6.47	7.35	8.53	9.40	10.32	1.55	1.76	2.25	2.71	3.10	15	RCP	III	831.29	830.82	0.47	46.99	1.000	0.013	6.43	5.24	Existing Pipe (To Remain)
10	1002	Curb Inlet	61+97.28	23.82	Rt	Clear Creek Pkwy	0.26	0.24	1003	0.50	5.20	5.19	5.18	5.17	5.17	1003	6.42	7.29	8.47	9.33	10.25	3.21	3.65	4.66	5.60	6.41	15	RCP	III	830.62	830.42	0.20	26.53	0.754	0.013	5.59	4.55	Existing Pipe (To Remain)
10	1001	End Section	61+97.41	58.39	Rt	Clear Creek Pkwy	0.00	0.50	1002	0.50	5.31	5.30	5.29	5.27	5.29	1002	6.39	7.26	8.43	9.29	10.20	3.20	3.63	4.64	5.57	6.38	15	RCP	III	830.42	830.38	0.04	6.08	0.658	0.013	5.22	4.25	Existing End Section (To Remain)
10	1000B	End Section	18+45.55	42.05	Lt.	Recreational Trail	0.17	0.50	1001	0.67	5.33	5.32	5.31	5.29	5.31	1001	6.38	7.26	8.42	9.29	10.20	4.27	4.86	6.21	7.47	8.54	18	RCP	III	826.03	825.22	0.81	59.64	1.358	0.013	12.20	6.90	
10	1000A	End Section	18+00.45	24.40	Rt	Recreational Trail	0.00	0.67	1000B	0.67	5.42	5.40	5.39	5.36	5.38	1000B	6.36	7.23	8.39	9.26	10.17	4.26	4.84	6.18	7.45	8.52	18	RCP	III	825.22	825.14	0.08	6.00	1.333	0.013	12.09	6.84	

Notes:

1. Information for Canyon Lakes future storm structures was obtained from coordination plans provided by Phelps Engineering, Inc. (PEI).
2. Canyon Lakes future structures were included in the analysis to assess and plan for the future impacts to Clear Creek Parkway's drainage system.
3. Lengths of pipe shown on the plans, profiles and calculations sheets are based on lineal feet measurements along pipe centerline from the structure inside face to structure inside face.
4. Lengths of pipe shown on the Summary Of Storm Drainage Quantities and Quantity Recapitulation sheets are based on lineal feet measurements along pipe centerline from the structure inside face to structure inside face rounded up to the nearest foot.

LAYOUT: MODEL | BY: jadams | DATE: 20-SEP-2016 10:36:47 AM
L:\150561-010_Cad\Civil\Drainage Map And Calcs\150561-010_DRAIN-CALC-03.dgn

REV.	DATE	REVISIONS	BY	APP'D
5				
4				
3				
2				
1				

COPYRIGHT © -2016-SHAFER, KLINE & WARREN INC.

Designed By: PRP
Drawn By: JCK/JAA
Checked By: HDL
Issue Date: SEPT. 2016

SHAFER, KLINE & WARREN
11250 Corporate Avenue
Lenexa, KS 66219-1392
913.888.7800 FAX: 913.888.7868
SURVEYING | ENGINEERING | CONSTRUCTION

CLEAR CREEK PARKWAY
CITY OF SHAWNEE, KANSAS

DRAINAGE
CALCULATIONS (3)

150561-010

NOT FOR CONSTRUCTION

Pipe Partial Flow and Travel Time Calculations - Table IV

Line Number	Structure Number	Structure Information	Roadway Location				Pipe Information / Actual Flow: Partial Flow Ratio					Partial Velocity Ratio					Actual Velocity (3≤Vp≤20 ft/sec)					Partial Depth Ratio					Actual Depth					Pipe Travel Time to Downstream Structure					Total Time to Downstream Structure					Downstream Structure Number	Comments
		Type	Station	Offset (Location Point)	Side	Name	Storm 1 5 Year	Storm 2 10 Year	Storm 3 25 Year	Storm 4 50 Year	Storm 5 100 Year	Storm 1 5 Year	Storm 2 10 Year	Storm 3 25 Year	Storm 4 50 Year	Storm 5 100 Year	Storm 1 5 Year	Storm 2 10 Year	Storm 3 25 Year	Storm 4 50 Year	Storm 5 100 Year	Storm 1 5 Year	Storm 2 10 Year	Storm 3 25 Year	Storm 4 50 Year	Storm 5 100 Year	Storm 1 5 Year	Storm 2 10 Year	Storm 3 25 Year	Storm 4 50 Year	Storm 5 100 Year	Storm 1 5 Year	Storm 2 10 Year	Storm 3 25 Year	Storm 4 50 Year	Storm 5 100 Year	Storm 1 5 Year	Storm 2 10 Year	Storm 3 25 Year	Storm 4 50 Year	Storm 5 100 Year		
LN	SN	SNtype	SNs	Snoc	SNsd	Sname	Qp/Qpc(5yr)	Qp/Qpc(10yr)	Qp/Qpc(25yr)	Qp/Qpc(50yr)	Qp/Qpc(100yr)	Vp/Vpc(5yr)	Vp/Vpc(10yr)	Vp/Vpc(25yr)	Vp/Vpc(50yr)	Vp/Vpc(100yr)	Vp(5yr)	Vp(10yr)	Vp(25yr)	Vp(50yr)	Vp(100yr)	dp/dpc(5yr)	dp/dpc(10yr)	dp/dpc(25yr)	dp/dpc(50yr)	dp/dpc(100yr)	dp(5yr)	dp(10yr)	dp(25yr)	dp(50yr)	dp(100yr)	Tcp(5yr)	Tcp(10yr)	Tcp(25yr)	Tcp(50yr)	Tcp(100yr)	Tc(5yr)	Tc(10yr)	Tc(25yr)	Tc(50yr)	Tc(100yr)	SNd	
#	#	#	stations	feet	text	text	#	#	#	#	#	#	#	#	#	#	ft/sec	ft/sec	ft/sec	ft/sec	ft/sec	#	#	#	#	#	feet	feet	feet	feet	feet	minutes	minutes	minutes	minutes	minutes	minutes	minutes	minutes	minutes	minutes	#	text
1	102	Area Inlet	49+28.11	14.69	Lt	Clare Road	0.4884	0.5552	0.7093	0.8517	0.9738	0.9914	1.0243	1.0839	1.1198	1.1391	2.78	2.87	3.03	3.14	3.19	0.49	0.53	0.62	0.70	0.79	0.61	0.66	0.78	0.88	0.99	0.75	0.72	0.69	0.66	0.65	5.75	5.72	5.69	5.66	5.65	101	
1	101	End Section	50+81.89	22.39	Lt	Clare Road	0.4394	0.5013	0.6388	0.7682	0.8814	0.9640	1.0000	1.0599	1.0993	1.1261	2.92	3.03	3.21	3.33	3.41	0.46	0.50	0.58	0.65	0.72	0.58	0.63	0.73	0.81	0.90	0.03	0.03	0.03	0.03	0.03	5.78	5.75	5.72	5.69	5.68	#N/A	
2	210	Curb Inlet	16+18.00	25.50	Lt	Clear Creek Pkwy	0.1733	0.1956	0.2511	0.3000	0.3444	0.7471	0.7618	0.8302	0.8675	0.9022	2.74	2.80	3.05	3.18	3.31	0.28	0.29	0.34	0.37	0.40	0.35	0.36	0.43	0.46	0.50	0.31	0.30	0.28	0.27	0.26	5.31	5.30	5.28	5.27	5.26	205	
2	209	Curb Inlet	19+48.01	60.07	Rt	Clear Creek Pkwy	0.3841	0.4371	0.5563	0.6733	0.7704	0.9239	0.9640	1.0243	1.0724	1.0993	3.41	3.56	3.78	3.96	4.06	0.42	0.46	0.53	0.60	0.65	0.53	0.58	0.66	0.75	0.81	0.24	0.23	0.22	0.21	0.20	7.98	7.97	7.96	7.95	7.94	204	
2	208	Curb Inlet	19+15.00	25.50	Lt	Clear Creek Pkwy	0.1327	0.1514	0.1925	0.2318	0.2654	0.6844	0.7165	0.7618	0.8038	0.8430	5.97	6.25	6.64	7.01	7.35	0.24	0.26	0.29	0.32	0.35	0.30	0.33	0.36	0.40	0.44	0.14	0.14	0.13	0.12	0.12	5.14	5.14	5.13	5.12	5.12	204	
2	207	Curb Inlet	14+50.00	25.50	Lt	Clear Creek Pkwy	0.4877	0.5553	0.7090	0.8525	0.9754	0.9914	1.0243	1.0839	1.1198	1.1391	3.94	4.07	4.30	4.45	4.52	0.49	0.53	0.62	0.70	0.79	0.61	0.66	0.78	0.88	0.99	0.22	0.21	0.20	0.19	0.19	6.62	6.61	6.60	6.59	6.59	206	
2	206	Curb Inlet	14+50.00	25.50	Rt	Clear Creek Pkwy	0.3433	0.3907	0.4984	0.6006	0.6872	0.9022	0.9343	0.9914	1.0393	1.0724	8.19	8.48	9.00	9.44	9.74	0.40	0.43	0.49	0.55	0.60	0.60	0.65	0.74	0.83	0.90	0.34	0.33	0.31	0.30	0.29	6.96	6.94	6.91	6.89	6.88	205	
2	205	Curb Inlet	16+18.00	25.50	Rt	Clear Creek Pkwy	0.3927	0.4461	0.5701	0.6874	0.7875	0.9343	0.9640	1.0319	1.0724	1.1039	9.50	9.80	10.49	10.91	11.23	0.43	0.46	0.54	0.60	0.66	0.65	0.69	0.81	0.90	0.99	0.53	0.51	0.48	0.46	0.45	7.49	7.45	7.39	7.35	7.33	204	
2	204	Curb Inlet	19+15.00	25.75	Rt	Clear Creek Pkwy	0.3565	0.4055	0.5179	0.6250	0.7156	0.9132	0.9445	1.0084	1.0533	1.0839	11.69	12.09	12.91	13.48	13.87	0.41	0.44	0.51	0.57	0.62	0.72	0.77	0.89	1.00	1.09	0.42	0.41	0.38	0.36	0.35	8.40	8.38	8.34	8.31	8.29	203	
2	203	Curb Inlet	22+00.00	26.00	Rt	Clear Creek Pkwy	0.4872	0.5545	0.7082	0.8565	0.9805	0.9914	1.0243	1.0839	1.1231	1.1397	5.91	6.10	6.46	6.69	6.79	0.49	0.53	0.62	0.71	0.80	1.23	1.33	1.55	1.78	2.00	0.14	0.13	0.13	0.12	0.12	8.54	8.51	8.47	8.43	8.41	202	
2	202	Curb Inlet	22+00.00	26.00	Lt	Clear Creek Pkwy	0.4915	0.5594	0.7143	0.8641	0.9894	0.9914	1.0243	1.0839	1.1231	1.1400	6.28	6.48	6.86	7.11	7.22	0.49	0.53	0.62	0.71	0.81	1.23	1.33	1.55	1.78	2.03	0.14	0.14	0.13	0.13	0.12	8.68	8.65	8.60	8.56	8.53	201	
2	201	End Section	22+45.36	80.12	Lt	Clear Creek Pkwy	0.4538	0.5169	0.6604	0.7991	0.9154	0.9734	1.0000	1.0663	1.1083	1.1335	6.63	6.81	7.26	7.55	7.72	0.47	0.50	0.59	0.67	0.75	1.18	1.25	1.48	1.68	1.88	0.02	0.01	0.01	0.01	0.01	8.70	8.66	8.61	8.57	8.54	#N/A	
3	304	Outlet Control Structure	24+48.33	65.55	Lt	Clear Creek Pkwy	0.4410	0.5400	0.6504	0.7521	0.8740	0.9640	1.0165	1.0599	1.0944	1.1261	16.77	17.69	18.44	19.04	19.59	0.46	0.52	0.58	0.64	0.72	2.07	2.34	2.61	2.88	3.24	0.04	0.04	0.03	0.03	0.03	10.84	10.84	10.83	10.83	10.83	303	
3	303	Curb Inlet	24+52.66	25.50	Lt	Clear Creek Pkwy	0.4383	0.5368	0.6465	0.7475	0.8687	0.9640	1.0165	1.0599	1.0944	1.1261	16.88	17.80	18.56	19.16	19.72	0.46	0.52	0.58	0.64	0.72	2.07	2.34	2.61	2.88	3.24	0.05	0.04	0.04	0.04	0.04	10.89	10.88	10.87	10.87	10.87	302	
3	302	Curb Inlet	24+59.73	25.50	Rt	Clear Creek Pkwy	0.4370	0.5352	0.6445	0.7453	0.8661	0.9640	1.0165	1.0599	1.0944	1.1231	16.93	17.85	18.61	19.22	19.72	0.46	0.52	0.58	0.64	0.71	2.07	2.34	2.61	2.88	3.20	0.07	0.07	0.07	0.06	0.06	10.96	10.95	10.94	10.93	10.93	301	
3	301	End Section	24+76.05	101.03	Rt	Clear Creek Pkwy	0.4444	0.5442	0.6554	0.7578	0.8807	0.9640	1.0165	1.0663	1.0993	1.1261	16.65	17.55	18.42	18.98	19.45	0.46	0.52	0.59	0.65	0.72	2.07	2.34	2.66	2.93	3.24	0.01	0.01	0.01	0.01	0.01	10.97	10.96	10.95	10.94	10.94	#N/A	
4	411	Curb Inlet	31+00.00	25.50	Lt	Clear Creek Pkwy	0.4311	0.4902	0.6258	0.7571	0.8665	0.9544	0.9914	1.0533	1.0993	1.1231	3.55	3.69	3.92	4.09	4.18	0.45	0.49	0.57	0.65	0.71	0.56	0.61	0.71	0.81	0.89	0.24	0.23	0.22	0.21	0.20	10.34	10.33	10.32	10.31	10.30	410	
4	410	Curb Inlet	31+00.00	25.50	Rt	Clear Creek Pkwy	0.2634	0.2997	0.3826	0.4633	0.5301	0.8430	0.8675	0.9239	0.9734	1.0084	13.01	13.39	14.26	15.02	15.56	0.35	0.37	0.42	0.47	0.51	0.53	0.56	0.63	0.71	0.77	0.16	0.16	0.15	0.14	0.14	10.50	10.49	10.47	10.45	10.44	402	
4	409	Curb Inlet	27+87.00	25.50	Lt	Clear Creek Pkwy	0.3427	0.3885	0.4963	0.5968	0.6839	0.9022	0.9343	0.9914	1.0393	1.0724	4.97	5.15	5.46	5.73	5.91	0.40	0.43	0.49	0.55	0.60	0.50	0.54	0.61	0.69	0.75	0.17	0.17	0.16	0.15	0.14	5.97	5.97	5.96	5.95	5.94	405	
4	408	Curb Inlet	26+93.18	59.02	Lt	Clear Creek Pkwy	0.4370	0.4957	0.6332	0.7622	0.8739	0.9640	0.9914	1.0533	1.0993	1.1261	3.81	3.92	4.16	4.34	4.45	0.46	0.49	0.57	0.65	0.72	0.69	0.74	0.86	0.98	1.08	0.19	0.18	0.17	0.17	0.16	7.69	7.68	7.67	7.67	7.66	407	
4	407	Curb Inlet	26+62.00	25.50	Lt	Clear Creek Pkwy	0.4929	0.5606	0.7162	0.8636	0.9889	0.9914	1.0243	1.0839	1.1231	1.1397	5.55	5.74	6.07	6.29	6.38	0.49	0.53	0.62	0.71	0.80	0.74	0.80	0.93	1.07	1.20	0.15	0.15	0.14	0.13	0.13	7.84	7.83	7.81	7.80	7.79	406	
4	406	Curb Inlet	26+62.00	25.50	Rt	Clear Creek Pkwy	0.4176	0.4748	0.6065	0.7314	0.8382	0.9544	0.9825	1.0464	1.0893	1.1198	7.18	7.39	7.87	8.19	8.42	0.45	0.48	0.56	0.63	0.70	0.68	0.72	0.84	0.95	1.05	0.27	0.26	0.25	0.24	0.23	8.11	8.09	8.06	8.04	8.02	405	
4	405	Curb Inlet	27+87.00	25.75	Rt	Clear Creek Pkwy	0.2169	0.2470	0.3155	0.3810	0.4364	0.7902	0.8172	0.8794	0.9239	0.9640	12.56	12.99	13.97	14.68	15.32	0.31	0.33	0.38	0.42	0.46	0.54	0.58	0.67	0.74	0.81	0.24	0.24	0.22	0.21	0.20	8.35	8.33	8.28	8.25	8.22	402	
4	404	Outlet Control Structure	29+67.62	73.95	Lt	Clear Creek Pkwy	0.5328	0.6527	0.7864	0.9096	1.0574	1.0084	1.0599	1.1039	1.1313	1.1311	18.24	19.17	19.97	20.47	20.46	0.51	0.58	0.66	0.74	0.88	3.06	3.48	3.96	4.44	5.28	0.04	0.04	0.04	0.04	0.04	14.44	14.44	14.44	14.44	14.44	403	
4	403	Curb Inlet	29+67.62	25.50	Lt	Clear Creek Pkwy	0.2296	0.2813	0.3389	0.3920	0.4557	0.8038	0.8554	0.9022	0.9343	0.9734	33.74	35.90	37.87	39.21	40.85	0.32	0.36	0.40	0.43	0.47	1.92	2.16	2.40	2.58	2.82	0.02	0.02	0.02	0.02	0.02	14.46	14.46	14.46	14.46	14.46	402	
4	402	Curb Inlet	29+67.62	25.75	Rt	Clear Creek Pkwy	0.5401	0.6617	0.7972	0.9221	1.0719	1.0165	1.0663	1.1083	1.1335	1.1200	18.13	19.02	19.77	20.22	19.98	0.52	0.59	0.67	0.75	0.91	3.12	3.54	4.02	4.50	5.46	0.08	0.07	0.07	0.07	0.07	14.54	14.53	14.53	14.53	14.53	401	
4	401	End Section	29+90.12	133.36	Rt	Clear Creek Pkwy	0.4765	0.5837	0.7033	0.8135	0.9457	0.9825	1.0319	1.0783	1.1124	1.1369	19.87	20.87	21.80	22.49	22.99	0.48	0.54	0.61	0.68	0.77	2.88	3.24	3.66	4.08	4.62	0.01	0.01	0.01	0.01	0.01	14.55	14.54	14.54	14.54	14.54	#N/A	
5	507	Curb Inlet	+52.00	19.50	Lt	59th Place	0.1224	0.1392	0.1768	0.2137	0.2442	0.6678	0.7007	0.7471	0.7902	0.8172	8.40	8.81	9.40	9.94	10.28	0.23	0.25	0.28	0.31	0.33	0.29	0.31	0.35	0.39	0.41	0.38	0.36	0.34	0.32	0.31	6.88	6.86	6.84	6.82	6.81	506	
5	506	Curb Inlet	32+41.37	56.43	Lt	Clear Creek Pkwy	0.4615	0.5250	0.6702	0.8077	0.9250	0.9734	1.0084	1.0663	1.1124	1.1335	5.72	5.93	6.27	6.54	6.66	0.47	0.51	0.59	0.68	0.75	0.71	0.77	0.89	1.02	1.13	0.17	0.16	0.15	0.15	0.14	7.05	7.02	6.99	6.97	6.95	505	
5	505	Curb Inlet	32+83.19	25.50	Lt	Clear Creek Pkwy	0.4951	0.5625	0.7188	0.8662	0.9932	0.9914	1.0243	1.0839	1.1231	1.1400	5.75	5.94	6.29	6.51	6.61	0.49	0.53	0.62	0.71	0.81	0.74	0.80	0.93	1.07	1.22	0.15	0.14	0.14	0.13	0.13	7.20	7.16	7.13	7.10	7.08	504	
5	504	Curb Inlet	32+83.19	25.50	Rt	Clear Creek Pkwy	0.3790	0.4319	0.5517	0.6657	0.7617	0.9239	0.9544	1.0243	1.0663	1.0993	7.02	7.25	7.78	8.10	8.35	0.42	0.45	0.53	0.59	0.65	0.63	0.68	0.80	0.89	0.98	0.15	0.14	0.13	0.13	0.12	7.35	7.30	7.26	7.23	7.20	410	
6	620	#N/A	98+86.86	0.00	Lt	Gleason Road	#N/A	#N/A	#N/A	#N/A	#N/A	#N/A	#N/A	#N/A	#N/A	#N/A	#N/A	#N/A	#N/A	#N/A	#N/A	#N/A	#N/A	#N/A	#N/A	#N/A	#N/A	#N/A	#N/A	#N/A	#N/A	#N/A	#N/A	#N/A	#N/A	#N/A	#N/A	#N/A	#N/A	#N/A	#N/A	#N/A	
6	619	Curb Inlet	99+09.21	27.26	Rt	Gleason Road	0.1715	0.1930	0.2476	0.2982	0.3411	0.7471	0.7618	0.8172	0.8675	0.9022	3.12	3.18	3.42	3.63	3.77	0.28	0.29	0.33	0.37	0.40	0.35	0.36	0.41	0.46	0.50	0.31	0.30	0.28	0.26	0.25	6.16	6.15	6.13	6.11	6.10	618	
6	618	Curb Inlet	99+10.13	29.87	Lt	Gleason Road	0.1143	0.1295	0.1654	0.1996	0.2287	0.6507	0.6844	0.7320	0.7761	0.8038	9.46	9.95	10.64	11.28	11.69	0.22	0.24	0.27	0.30	0.32	0.28	0.30	0.34	0.38	0.40	0.08	0.08	0.07	0.07	0.07	6.24	6.23	6.20	6.18	6.17	602	
6	617	Curb Inlet	4+35.00	0.00	Lt	59th Place	0.4894	0.5565	0.7093	0.8559	0.9789	0.9914	1.0243	1.0839	1.1231	1.1397	6.50	6.72	7.11	7.37	7.48	0.49	0.53	0.62	0.71	0.80	0.61	0.66	0.78	0.89	1.00	0.19	0.18	0.17	0.17	0.16	7.59	7.58	7.57	7.57	7.56	616	
6	616	Junction Box	3+85.00	54.50	Rt	59th Place	0.3017	0.3426	0.4375	0.5278	0.6049	0.8675	0.9022	0.9640	1.0084	1.0464	9.16	9.53	10.18	10.65	11.05	0.37	0.40	0.46	0.51	0.56	0.46	0.50	0.58	0.64	0.70	0.20	0.20	0.18	0.18	0.17	7.79	7.78	7.75	7.75	7.73	615	
6	615	Junction Box	3+80.00	166.49	Rt	59th Place	0.2893	0.3289	0.4206	0.5071	0.5809	0.8554	0.8909	0.9544	1.0000	1.0319	9.35	9.74	10.43	10.93	11.28	0.36	0.39	0.45	0.50	0.54	0.45	0.49	0.56	0.63	0.68	0.38	0.36	0.34	0.32	0.31	8.17	8.14	8.09	8.07	8.04	614	
6	614	Junction Box	6+85.00	18.37	Lt	Barth Road	0.2307	0.2627	0.3349	0.4048	0.4645	0.8038	0.8302	0.8909	0.9445	0.9734	10.88	11.23	12.05	12.78	13.17	0.32	0.34	0.39	0.44	0.47	0.40	0.43	0.49	0.55	0.59	0.15	0.15	0.14	0.13	0.13	8.32	8.29	8.23	8.20	8.17	613	
6	613	Curb Inlet	36+43.43	56.59	Lt	Clear Creek Pkwy	0.4963	0.5642	0.7216	0.8716	0.9985	0.9914	1.0243	1.0839	1.1261	1.1400	5.52	5.71	6.04	6.27	6.35	0.49	0.53	0.62	0.72	0.81	0.86	0.93	1.09	1.26	1.42	0.27	0.26	0.25	0.24	0.23	8.59	8.55	8.48	8.44	8.40	610	
6	612	Curb Inlet	37+38.00	25.50	Lt	Clear Creek Pkwy	0.4152	0.4739	0.6043	0.7239	0.8304	0.9445	0.9825	1.0464	1.0893	1.1162	3.54	3.68	3.92	4.08	4.19	0.44	0.48	0.56	0.63	0.69	0.55	0.60	0.70	0.79	0.86	0.24	0.23	0.22	0.21	0.20	5.59	5.58	5.57	5.56	5.55	608	
6	611	Curb Inlet	38+81.00	25.50	Lt	Clear Creek Pkwy	0.3391	0.3848	0.4913	0.5913	0.6761	0.9022	0.9343	0.9914	1.0393	1.0724	3.38	3.50	3.72	3.90	4.02	0.40	0.43	0.49	0.55	0.60	0.50	0.54	0.61	0.69	0.75	0.25	0.24	0.23	0.22	0.21	6.15	6.14	6.13	6.12	6.11	607	
6	610	Curb Inlet	35+75.00	25.75	Lt	Clear Creek Pkwy	0.4931	0.5614	0.7179	0.8687	0.9960	0.9914	1.0243	1.0839	1.1261	1.1400	7.19	7.43	7.86	8.16	8.27	0.49	0.53	0.62	0.72	0.81	0.86	0.93	1.09	1.26	1.42	0.13	0.13	0.12	0.12	0.12	8.72	8.68	8.60	8.56	8.52	609	
6	609	Curb Inlet	36+02.00	25.75	Rt	Clear Creek Pkwy	0.2747	0.3122	0.3997	0.4837	0.5539	0.8430	0.8794	0.9343	0.9914	1.0243	12.22	12.75	13.55	14.38	14.85	0.35	0.38	0.43	0.49	0.53	0.61	0.67	0.75	0.86	0.93	0.19	0.18	0.17	0.16	0.15	8.91	8.86	8.77	8.72	8.67	608	
6	608	Curb Inlet	37+38.00	25.75	Rt	Clear Creek Pkwy	0.3815	0.4340	0.5552	0.6724	0.7707	0.9239	0.9640	1.0243	1.0724	1.0993	11.76	12.27	13.04	13.65	13.99	0.42	0.46	0.53	0.60	0.65	0.74	0.81	0.93	1.05	1.14	0.21	0.20	0.19	0.18	0.18	9.12	9.06	8.96	8.90	8.85	607	
6	607	Curb Inlet	38+81.00	25.75	Rt	Clear Creek Pkwy	0.4919	0.5597	0.7167	0.8686	0.9960	0.9914	1.0243	1.0839	1.1261	1.1400	11.42	11.80	12.49	12.97	13.13	0.49	0.53	0.62	0.72	0.81	0.86	0.93	1.09	1.26	1.42	0.20	0.19	0.18	0.18	0.17	9.32	9.25	9.14	9.08	9.02	604	
6	606	Area Inlet	39+99.55	63.86	Lt	Clear Creek Pkwy	0.4832	0.5495	0.7009	0.8430	0.9645	0.9914	1.0165	1.0783	1.1198	1.1382	6.01	6.16	6.53	6.79	6.90	0.49	0.52	0.61	0.70	0.78	0.74	0.78	0.92	1.05	1.17	0.11	0.11	0.10	0.10	0.10	6.03	6.03	6.02	6.02	6.02	605	
6	605	Curb Inlet	40+14.37	25.50	Lt	Clear Creek Pkwy	0.3010	0.3425	0.4372	0.5258	0.6019	0.8675	0.9022	0.9640	1.0084	1.0393	7.20	7.49	8.00	8.37	8.63	0.37	0.40	0.46	0.51	0.55	0.65	0.70	0.81	0.89	0.96	0.11	0.11	0.10	0.10	0.09	6.14	6.14	6.12	6.12	6.11	604	
6	604	Curb Inlet	40+14.91	23.18	Rt	Clear Creek Pkwy	0.4856	0.5530	0.7087	0.8582	0.9837	0.9914	1.0243	1.0839	1.1231	1.1397	13.00	13.43	14.21	14.72	14.94	0.49	0.53	0.62	0.71	0.80	0.98	1.06	1.24	1.42	1.60	0.13	0.12	0.12	0.11	0.11	9.45	9.37	9.26	9.19	9.13	602	
6	603	End Section	42+47.44	145.43	Lt	Clear Creek Pkwy	0.4640	0.5791	0.7086	0.8294	0.9758	0.9734	1.0319	1.0839	1.1162	1.1391	9.15	9.70	10.19	10.49	10.71	0.47	0.54	0.62	0.69	0.79	2.35	2.70	3.10	3.45	3.95	0.45	0.42	0.40	0.39	0.38	10.65	10.62	10.60	10.59	10.58	602	
6	602	Junction Box	40+95.28	89.36	Rt	Clear Creek Pkwy	0.4626	0.5774	0.7065	0.8269	0.9729	0.9734	1.0319	1.0839	1.1162	1.1391	9.17	9.72	10.21	10.51	10.73	0.47	0.54	0.62	0.69	0.79	2.35	2.70	3.10	3.45	3.95	0.09	0.09	0.08	0.08	0.08	10.74	10.71	10.68	10.67	10.66	601	
6	601	End Section	98+48.12	57.72	Lt	Gleason Road	0.4706	0.5874	0.7187	0.8412	0.9897	0.9825	1.0393	1.0839	1.1198	1.1400	9.10	9.62	10.04	10.37	10.56	0.48	0.55	0.62	0.70	0.81	2.40	2.75	3.10	3.50	4.05	0.02	0.01	0.01	0.01	0.01	10.76	10.72	10.69	10.68	10.67	#N/A	
7	706	Curb Inlet	44+45.00	25.50	Lt	Clear Creek Pkwy	0.1187	0.1355	0.1722	0.2074	0.2375	0.6678	0.6844	0.7471	0.7761	0.8172	3.25	3.33	3.64	3.78	3.98	0.23	0.24	0.28	0.30	0.33	0.29	0.30	0.35	0.38	0.41	0.26	0.26	0.23	0.22	0.21	5.26	5.26	5.23	5.22	5.21	705	
7	705	Curb Inlet	44+45.00	25.50	Rt	Clear Creek Pkwy	0.4480	0.5085	0.6503	0.7807	0.8960	0.9640	1.0000	1.0599	1.1039	1.1288	4.15	4.31	4.57	4.76	4.87	0.46	0.50	0.58	0.66	0.73	0.58	0.63	0.73	0.83	0.91	1.22	1.17	1.11	1.06	1.04	6.48	6.43	6.34	6.28	6.25	702	
7	704	End Section	47+58.07	46.56	Lt	Clear Creek Pkwy	0.6415	0.7655	0.9023	1.0279	1.1777	1.0599	1.0993	1.1313	1.1387	1.0000	6.60	6.85	7.05	7.09	6.23	0.58	0.65	0.74	0.84	1.00	1.64	1.84	2.09	2.38	2.83	0.06	0.05	0.05	0.05	0.06	9.81	9.80	9.80	9.80	9.81	703	2-24" RCP's Modeled as 1-33.94" RCP
7	703	Curb Inlet	47+58.07	25.50	Lt	Clear Creek Pkwy	0.6592	0.7867	0.9272	1.0562	1.2102	1.0663	1.1039	1.1353	1.1311	1.0000	6.46	6.69	6.88	6.85	6.06	0.59	0.66	0.76	0.88	1.00	1.67	1.87	2.15	2.49	2.83	0.12	0.12	0.11	0.11	0.13	9.93	9.92	9.91	9.91	9.94	702	2-24" RCP's Modeled as 1-33.94" RCP
7	702	Curb Inlet	47+58.07	25.50	Rt	Clear Creek Pkwy	0.6483	0.7736	0.9119	1.0388	1.1902	1.0599	1.1039	1.1335	1.1374	1.0000	6.53	6.80	6.98	7.01	6.16	0.58	0.66	0.75	0.85	1.00	1.64	1.87	2.12	2.40	2.83	0.06	0.06	0.06	0.05	0.06	9.99	9.98	9.97	9.96	10.00	701	2-24" RCP's Modeled as 1-33.94" RCP
7	701	End Section	47+58.07	56.20	Rt	Clear Creek Pkwy	0.6232	0.7437	0.8766	0.9985	1.1441	1.0533	1.0944	1.1261	1.1400	1.0000	6.75	7.02	7.22	7.31	6.41	0.57	0.64	0.72	0.81	1.00	1.61	1.81	2.04	2.29	2.83	0.01	0.01	0.01	0.01	0.02	10.00	9.99	9.98	9.97	10.02	#N/A	2-24" RCP's Modeled as 1-33.94" RCP
8	806	Curb Inlet	50+00.00	25.50	Lt	Clear Creek Pkwy	0.4990	0.5678	0.7244	0.8706	0.9958	0.9914	1.0243	1.0893	1.1261	1.1400	3.87	3.99	4.25	4.39	4.45	0.49	0.53	0.63	0.72	0.81	0.61	0.66	0.79	0.90	1.01	0.22	0.21	0.20	0.19	0.19	5.22	5.21	5.20	5.19	5.19	805	
8	805	Curb Inlet	50+00.00	25.50	Rt	Clear Creek Pkwy	0.4707	0.5361	0.6844	0.8218	0.9401	0.9825	1.0165	1.0724	1.1162	1.1369	5.89	6.09	6.42	6.69	6.81	0.48	0.52	0.60	0.69	0.77	0.60	0.65	0.75	0.86	0.96	0.34	0.33	0.31	0.30	0.29	5.56	5.54	5.51	5.49	5.48	802	
8	804	End Section	51+20.00	58.56	Lt	Clear Creek Pkwy	0.6697	0.8243	0.9968	1.1560	1.3471	1.0663	1.1162	1.1400	1.0000	1.0000	10.44	10.93	11.16	9.79	9.79	0.59	0.69	0.81	1.00	1.00	2.07	2.42	2.84	3.50	3.50	0.05	0.05	0.05	0.05	0.05	12.55	12.55	12.55	12.55	12.55	803	
8	803	Curb Inlet	51+20.00	25.50	Lt	Clear Creek Pkwy	0.6803	0.8372	1.0125	1.1742	1.3683	1.0724	1.1162	1.1395	1.0000	1.0000	10.34	10.76	10.98	9.64	9.64	0.60	0.69	0.83	1.00	1.00	2.10	2.42	2.91	3.50	3.50	0.08	0.07	0.07	0.08	0.08	12.63	12.62	12.62	12.63	12.63	802	
8	802	Curb Inlet	51+20.00	25.50	Rt	Clear Creek Pkwy	0.6803	0.8372	1.0125	1.1742	1.3683	1.0724	1.1162	1.1395	1.0000	1.0000	10.34	10.76	10.98	9.64	9.64	0.60	0.69	0.83	1.00	1.00	2.10	2.42	2.91	3.50	3.50	0.05	0.05	0.05	0.05	0.05	12.68	12.67	12.67	12.68	12.68	801	
8	801	End Section	51+20.00	66.45	Rt	Clear Creek Pkwy	0.6779	0.8343	1.0089	1.1700	1.3635	1.0724	1.1162	1.1399	1.0000	1.0000	10.38	10.80	11.03	9.68	9.68	0.60	0.69	0.82	1.00	1.00	2.10	2.42	2.87	3.50	3.50	0.01	0.01	0.01	0.01	0.01	12.69	12.68	12.68	12.69	12.69	#N/A	
9	908	Curb Inlet	54+50.00	25.50	Lt	Clear Creek Pkwy	0.4370	0.4957	0.6326	0.7609	0.8696	0.9640	0.9914	1.0533	1.0993	1.1261	3.62	3.72	3.95	4.12	4.22	0.46	0.49	0.57	0.65	0.72	0.58	0.61	0.71	0.81	0.90	0.23	0.23	0.22	0.21	0.20	5.23	5.23	5.22	5.21	5.20	907	
9	907	Curb Inlet	54+50.00	25.50	Rt	Clear Creek Pkwy	0.4657	0.5289	0.6756	0.8129	0.9300	0.9734	1.0084	1.0724	1.1124	1.1353	5.90	6.11	6.50	6.74	6.88	0.47	0.51	0.60	0.68	0.76	0.59	0.64	0.75	0.85	0.95	0.92	0.89	0.83	0.80	0.79	6.15	6.12	6.05	6.01	5.99	905	
9	906	Curb Inlet	57+80.00	25.50	Lt	Clear Creek Pkwy	0.2900	0.3284	0.4200	0.5053	0.5778	0.8554	0.8909	0.9544	1.0000	1.0319	3.27	3.40	3.65	3.82	3.94	0.36	0.39	0.45	0.50	0.54	0.45	0.49	0.56	0.63	0.68	0.26	0.25	0.23	0.22	0.22	5.26	5.25	5.23	5.22	5.22	905	
9	905	Curb Inlet	57+80.00	25.50	Rt	Clear Creek Pkwy	0.4594	0.5224	0.6689	0.8064	0.9233	0.9734	1.0084	1.0663	1.1124	1.1335	5.33	5.53	5.84	6.10	6.21	0.47	0.51	0.59	0.68	0.75	0.82	0.89	1.03	1.19	1.31	0.80	0.77	0.73	0.70	0.69	6.95	6.89	6.78	6.71	6.68	902	
9	904	30° Wingwalls & Apron	60+29.54	51.38	Lt	Clear Creek Pkwy	0.5911	0.6924	0.8043	0.9068	1.0295	1.0393	1.0783	1.1083	1.1313	1.1387	8.54	8.86	9.11	9.30	9.36	0.55	0.61	0.67	0.74	0.84	3.04	3.37	3.70	4.09	4.64	0.06	0.06	0.06	0.05	0.05	6.81	6.81	6.81	6.80	6.80	903	1-8'x3' RCB Modeled as 1-66.33" RCP
9	903	Curb Inlet	60+29.54	25.50	Lt	Clear Creek Pkwy	0.6267	0.7342	0.8528	0.9615	1.0916	1.0533	1.0893	1.1231	1.1382	1.0000	8.16	8.44	8.70	8.82	7.75	0.57	0.63	0.71	0.78	1.00	3.15	3.48	3.92	4.31	5.53	0.10	0.10	0.10	0.09	0.11	6.91	6.91	6.91	6.89	6.91	902	1-8'x3' RCB Modeled as 1-66.33" RCP
9	902	Curb Inlet	60+29.54	25.50	Rt	Clear Creek Pkwy	0.6584	0.7713	0.8959	1.0101	1.1568	1.0663	1.0993	1.1288	1.1399	1.0000	7.87	8.11	8.33	8.41	7.38	0.59	0.65	0.73	0.82	1.00	3.26	3.59	4.04	4.53	5.53	0.08	0.07	0.07	0.07	0.08	7.03	6.98	6.98	6.96	6.99	901	1-8'x3' RCB Modeled as 1-66.33" RCP
9	901	30° Wingwalls & Apron	60+29.54	54.89	Rt	Clear Creek Pkwy	0.5514	0.6459	0.7503	0.8459	0.9687	1.0243	1.0599	1.0944	1.1198	1.1391	9.02	9.34	9.64	9.87	10.04	0.53	0.58	0.64	0.70	0.79	2.93	3.21	3.54	3.87	4.37	0.01	0.01	0.01	0.01	0.01	7.04	6.99	6.99	6.97	7.00	900B	1-8'x3' RCB Modeled as 1-66.33" RCP
9	900B	30° Wingwalls & Apron	+45.77	16.64	Lt	South Cart Path	0.4335	0.5078	0.5898	0.6650	0.7616	0.9640	1.0000	1.0393	1.0663	1.0993	14.40	14.94	15.53	15.93	16.42	0.46	0.50	0.55	0.59	0.65	2.20	2.39	2.63	2.82	3.11	0.01	0.01	0.01	0.01	0.01	7.05	7.00	7.00	6.98	7.01	900A	1-6'x3' RCB Modeled as 1-57.45" RCP
9	900A	30° Wingwalls & Apron	+44.93	8.64	Rt	South Cart Path	0.5120	0.5997	0.6966	0.7855	0.8995	1.0000	1.0393	1.0783	1.1039	1.1313	12.65	13.15	13.64	13.96	14.31	0.50	0.55	0.61	0.66	0.74	2.39	2.63	2.92	3.16	3.54	0.01	0.01	0.01	0.01	0.01	7.06	7.01	7.01	6.99	7.02	#N/A	1-6'x3' RCB Modeled as 1-57.45" RCP
10	1003	Curb Inlet	61+97.14	27.12	Lt	Clear Creek Pkwy	0.2411	0.2737	0.3499	0.4215	0.4821	0.8172	0.8430	0.9022	0.9544	0.9825	4.28	4.42	4.73	5.00	5.15	0.33	0.35	0.40	0.45	0.48	0.41	0.44	0.50	0.56	0.60	0.20	0.19	0.18	0.17	0.17	5.20	5.19	5.18	5.17	5.17	1002	Existing Pipe (To Remain)
10	1002	Curb Inlet	61+97.28	23.82	Rt	Clear Creek Pkwy	0.5742	0.6530	0.8336	1.0018	1.1467	1.0319	1.0599	1.1162	1.1399	1.0000	4.70	4.82	5.08	5.19	4.55	0.54	0.58	0.69	0.82	1.00	0.68	0.73	0.86	1.03	1.25	0.11	0.11	0.11	0.10	0.12	5.31	5.30	5.29	5.27	5.29	1001	Existing Pipe (To Remain)
10	1001	End Section	61+97.41	58.39	Rt	Clear Creek Pkwy	0.6130	0.6954	0.8889	1.0670	1.2222	1.0464	1.0783	1.1288	1.1243	1.0000	4.45	4.58	4.80	4.78	4.25	0.56	0.61	0.73	0.90	1.00	0.70	0.76	0.91	1.13	1.25	0.02	0.02	0.02	0.02	0.02	5.33	5.32	5.31	5.29	5.31	1000B	Existing End Section (To Remain)
10	1000B	End Section	18+45.55	42.05	Lt.	Recreational Trail	0.3500	0.3984	0.5090	0.6123	0.7000	0.9022	0.9343	1.0000	1.0464	1.0783	6.23	6.45	6.90	7.22	7.44	0.40	0.43	0.50	0.56	0.61	0.60	0.65	0.75	0.84	0.92	0.09	0.08	0.08	0.07	0.07	5.42	5.40	5.39	5.36	5.38	1000A	
10	1000A	End Section	18+00.45	24.40	Rt	Recreational Trail	0.3524	0.4003	0.5112	0.6162	0.7047	0.9022	0.9445	1.0000	1.0464	1.0783	6.17	6.46	6.84	7.16	7.38	0.40	0.44	0.50	0.56	0.61	0.60	0.66	0.75	0.84	0.92	0.02	0.02	0.01	0.01	0.01	5.44	5.42	5.40	5.37	5.39	#N/A	

Notes:

1 Information for Canyon Lakes future storm structures was obtained from coordination plans provided by Phelps Engineering, Inc. (PEI).
2 Canyon Lakes future structures were included in the analysis to assess and plan for the future impacts to Clear Creek Parkway's drainage system.
3 Lengths of pipe shown on the plans, profiles and calculations sheets are based on lineal feet measurements along pipe centerline from the structure inside face to structure inside face.
4 Lengths of pipe shown on the Summary Of Storm Drainage Quantities and Quantity Recapitulation sheets are based on lineal feet measurements along pipe centerline from the structure inside face to structure inside face rounded up to the nearest foot.

LAYOUT: MODEL | BY: jadams | DATE: 20-SEP-2016 10:36:55 AM
L:\150561-010_Cad\Civil\Drainage Map And Calcs\150561-010_DRAIN-CALC-04.dgn

REV.	DATE	REVISIONS	BY	APP'D
5				
4				
3				
2				
1				

COPYRIGHT © -2016-SHAFER, KLINE & WARREN INC.

Designed By: PRP
Drawn By: JCK/JAA
Checked By: HDL
Issue Date: SEPT. 2016

SHAFER, KLINE & WARREN
11250 Corporate Avenue
Lenexa, KS 66219-1392
913.888.7800 FAX: 913.888.7868
SURVEYING | ENGINEERING | CONSTRUCTION

CLEAR CREEK PARKWAY
CITY OF SHAWNEE, KANSAS

DRAINAGE CALCULATIONS (4)

150561-010

NOT FOR CONSTRUCTION

PLANT SCHEDULE

TREES	QTY	COMMON NAME / BOTANICAL NAME	CONT	CAL	SIZE
	2	GREEN MOUNTAIN SUGAR MAPLE / ACER SACCHARUM `GREEN MOUNTAIN` TM	B & B	3"CAL	
	3	LEGACY SUGAR MAPLE / ACER SACCHARUM `LEGACY`	B & B	2.5"CAL	
	3	MAIDENHAIR TREE / GINKGO BILOBA `SARATOGA`	B & B	2.5"CAL	
	15	CANAERTI EASTERN RED CEDAR / JUNIPERUS VIRGINIANA `IMPRERED CANAERTI`	B & B		6`-7`
	8	WILDFIRE BLACKGUM / NYSSA SYLVATICA `WILDFIRE`	B & B	1.25"CAL	
	1	SAWTOOTH OAK / QUERCUS ACUTISSIMA	B & B	2.5"CAL	
	3	CHINKAPIN OAK / QUERCUS MUEHLENBERGII	B & B	2.5"CAL	

SHRUBS	QTY	COMMON NAME / BOTANICAL NAME	CONT	SPACING
	212	BUFFALO JUNIPER / JUNIPERUS SABINA `BUFFALO`	5 GAL	48" o.c.
	122	MINI ARCADIA JUNIPER / JUNIPERUS SABINA `MINI-ARCADIA`	5 GAL	72" o.c.
	149	PEEK A BLUE RUSSIAN SAGE / PEROVSKIA ATRIPLICIFOLIA `PEEK A BLUE`	5 GAL	24" o.c.
	75	GRO LOW FRAGRANT SUMAC / RHUS AROMATICA `GRO LOW`	5 GAL	84" o.c.

GRASSES	QTY	COMMON NAME / BOTANICAL NAME	CONT	SPACING
	164	KARL FOERSTER FEATHER REED GRASS / CALAMAGROSTIS X ACUTIFLORA `KARL FOERSTER`	3 GAL	48" o.c.

GROUND COVERS	QTY	COMMON NAME / BOTANICAL NAME	CONT	SPACING
	1,431	MARCUS SALVIA / SALVIA NEMOROSA `MARCUS`	1 GAL	18" o.c.

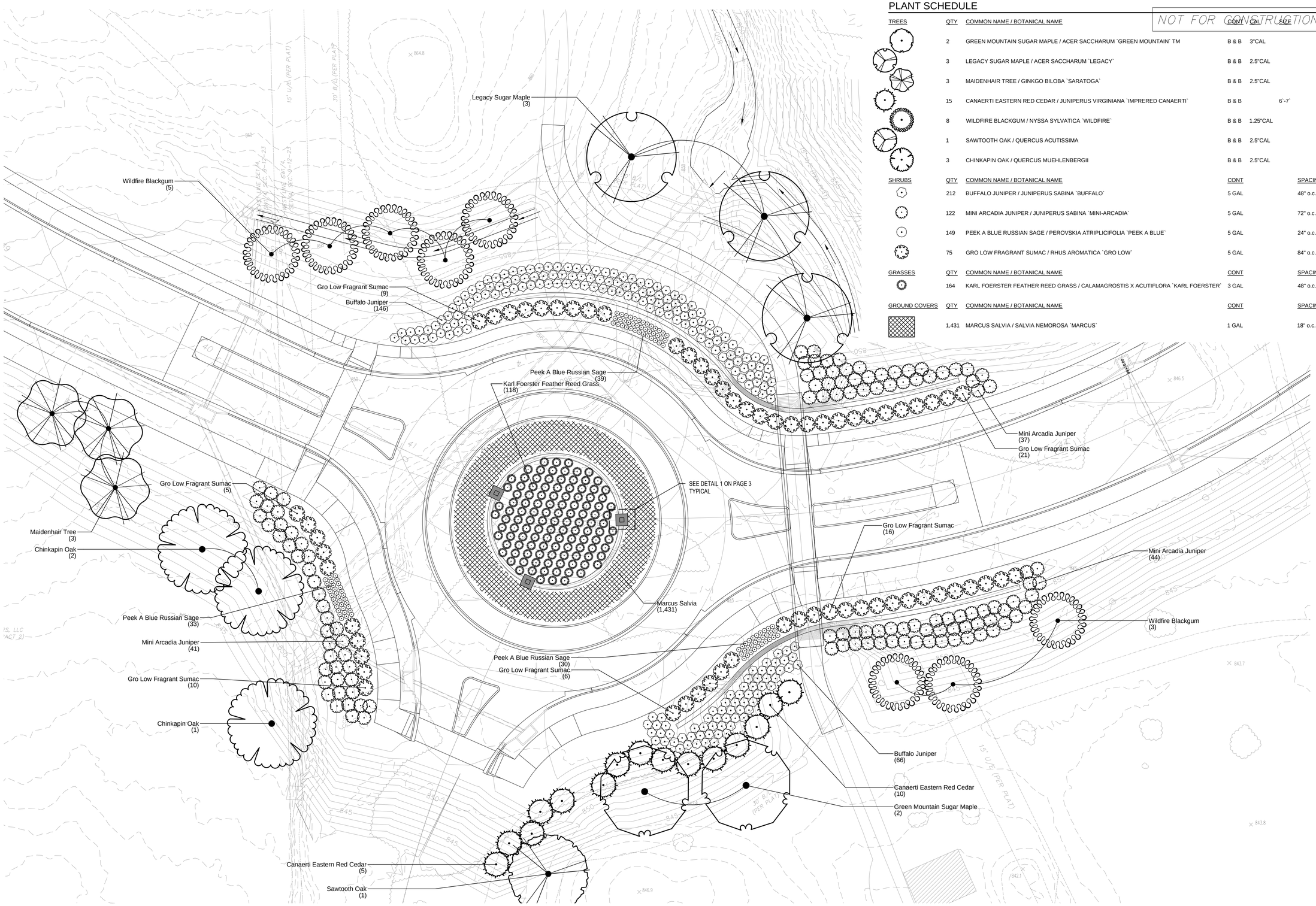

1 Roundabout Landscape Plan

SCALE: 1" = 20' - 0"

NO.	DATE	REVISIONS	BY	APP'D
5				
4				
3				
2				
1				

Designed By:
Drawn By:
Checked By:
Issue Date:

COPYRIGHT © -2016-SHAFER, KLINE & WARREN INC.

SHAFER, KLINE & WARREN
11250 Corporate Avenue
Lenexa, KS 66219-1392
913.888.7800 FAX:913.888.7868
SURVEYING | ENGINEERING | CONSTRUCTION

CLEAR CREEK PARKWAY
CITY OF SHAWNEE, KANSAS

ROUNDABOUT
LANDSCAPE PLAN

150561-010

SHEET NO.
1 OF 4

LAYOUT: MODEL BY: JAB DATE: 8-Jul-16 2:27:31 PM
P:\15-123 CLEAR CREEK PARKWAY - SHAWNEE, KS\15-123 CONSTRUCTION DOCUMENTS\15-123 CD CURRENT\15-123 LNSP_CURRENT.DWG

NOT FOR CONSTRUCTION

PLANT SCHEDULE WEST INTERSECTION

SHRUBS	QTY	COMMON NAME / BOTANICAL NAME	CONT	SPACING
	47	PEEK A BLUE RUSSIAN SAGE / PEROVSKIA ATRIPLICIFOLIA `PEEK A BLUE`	5 GAL	24" o.c.
	13	GRO LOW FRAGRANT SUMAC / RHUS AROMATICA `GRO LOW`	5 GAL	84" o.c.

GRASSES	QTY	COMMON NAME / BOTANICAL NAME	CONT	SPACING
	46	KARL FOERSTER FEATHER REED GRASS / CALAMAGROSTIS X ACUTIFLORA `KARL FOERSTER`	3 GAL	48" o.c.

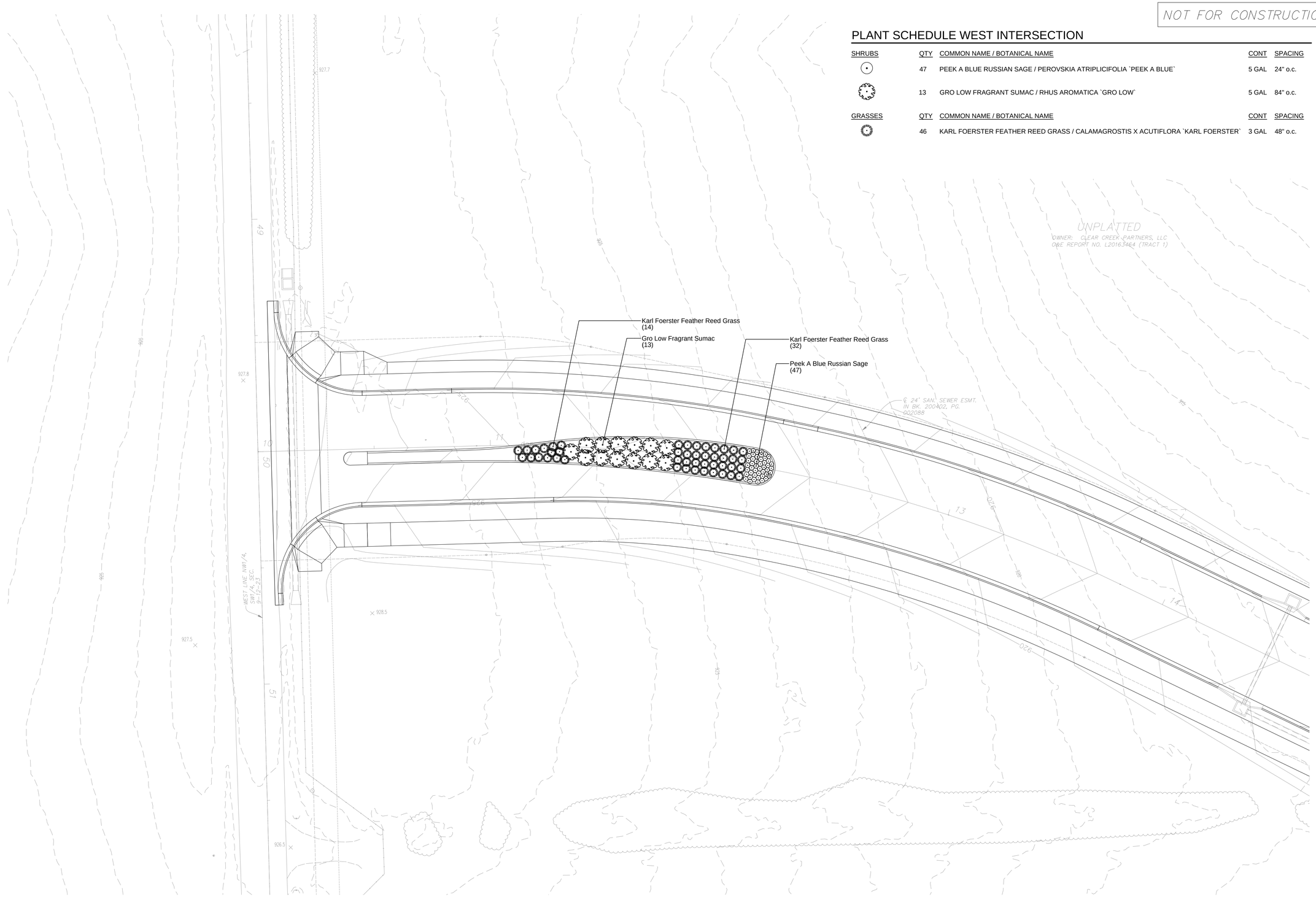

1 West Intersection Landscape Plan

SCALE: 1" = 20' - 0"

NO.	DATE	REVISIONS	BY	APP'D
1				
2				
3				
4				
5				

COPYRIGHT © -2016- SHAFER, KLINE & WARREN, INC.

Designed By: ____
Drawn By: ____
Checked By: ____
Issue Date: ____

SHAFER, KLINE & WARREN
11250 Corporate Avenue
Lenexa, KS 66219-1392
913.888.7800 FAX:913.888.7868
SURVEYING | ENGINEERING | CONSTRUCTION

CLEAR CREEK PARKWAY
CITY OF SHAWNEE, KANSAS

WEST INTERSECTION
LANDSCAPE PLAN

150561-010

SHEET NO.
2 OF 4

LAYOUT: MODEL BY: JAB DATE: 8-Jul-16 2:27:31 PM
P:\15-123 CLEAR CREEK PARKWAY - SHAWNEE, KS\15-123 CONSTRUCTION DOCUMENTS\15-123 CD CURRENT\15-123 LNSP_CURRENT.DWG

NOT FOR CONSTRUCTION

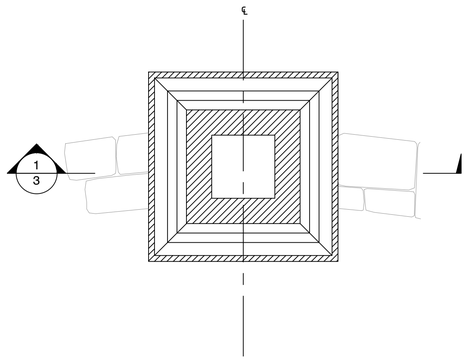

PLAN VIEW

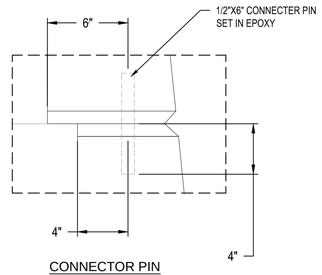

CONNECTOR PIN

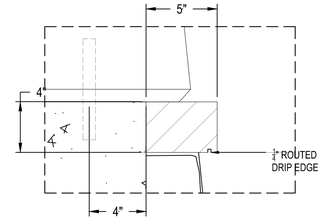

DRIP EDGE

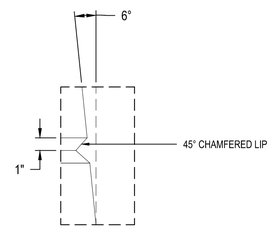

CHAMFERED EDGE

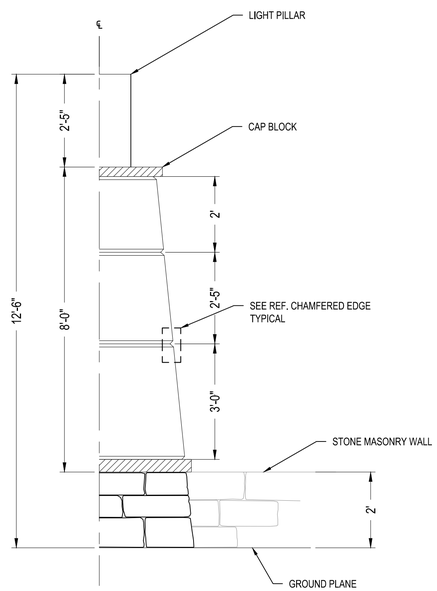

ELEVATION

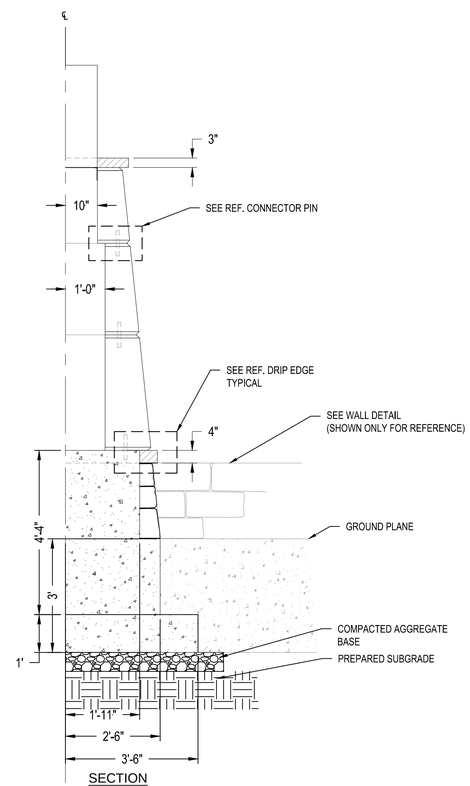

SECTION

1 Light Pillar

SCALE: 1/2" = 1' - 0"

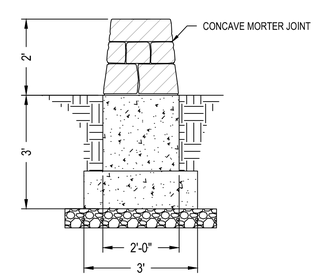

2 Stone Wall Detail

SCALE: 1/2" = 1' - 0"

NO.	DATE	REVISIONS	BY	APP'D
5				
4				
3				
2				
1				

COPYRIGHT © -2016-SHAFER, KLINE & WARREN INC.

Designed By:
Drawn By:
Checked By:
Issue Date:

SHAFER, KLINE & WARREN
11250 Corporate Avenue
Lenexa, KS 66219-1392
913.888.7800 FAX:913.888.7868
SURVEYING | ENGINEERING | CONSTRUCTION

CLEAR CREEK PARKWAY
CITY OF SHAWNEE, KANSAS

LANDSCAPE PLAN
DETAILS

150561-010

LAYOUT: MODEL | BY: JAB | DATE: 8-Jul-16 | 2:27:31 PM
P:\15-123 CLEAR CREEK PARKWAY - SHAWNEE, KS\15-123 CONSTRUCTION DOCUMENTS\15-123 CD CURRENT\15-123 LNSP_CURRENT.DWG

NOT FOR CONSTRUCTION

Landscaping Notes:

1. CONTRACTOR SHALL LOCATE ALL UTILITIES BEFORE COMMENCING WORK. CONTRACTOR SHALL BE RESPONSIBLE FOR THE REPAIR OF ANY DAMAGE TO UTILITIES RESULTING FROM LANDSCAPE OPERATIONS. ANY UTILITIES SHOWN ON PLAN ARE FOR REFERENCE ONLY AND MAY OR MAY NOT DEPICT THE ACTUAL LOCATION OF SERVICES.
2. LANDSCAPE CONTRACTOR IS REPONSIBLE FOR OBTAINING NECESSARY PERMITS AND APPROVALS, AND REQUIRED INSPECTIONS BY THE LEGAL AUTHORITIES.
3. NO MATERIAL SUBSTITUTIONS SHALL BE MADE WITHOUT LANDSCAPE ARCHITECT'S APPROVAL. ALTERNATE MATERIALS OF SIMILAR SIZE AND CHARACTER MAY BE CONSIDERED IF SPECIFIED PLANT MATERIALS CANNOT BE OBTAINED. LANDSCAPE ARCHITECT RESERVES THE RIGHT TO REVISE PLANT LIST AS DEEMED NECESSARY.
4. QUANTITIES OF MATERIALS SHOWN ON THE PLANTING PLAN TAKE PRECEDENCE OVER QUANTITIES SHOWN ON THE PLANT MATERIAL SCHEDULE. LANDSCAPE CONTRACTOR SHALL BE RESPONSIBLE FOR VERIFYING ALL QUANTITIES ON THE PLANTING PLAN PRIOR TO BIDDING.
5. REPORT ANY DISCREPANCIES IN THE PLANTING PLAN TO THE LANDSCAPE ARCHITECT, PRIOR TO PURCHASING MATERIALS OR STARTING CONSTRUCTION.
6. EXISTING TREES AND THEIR ROOT ZONES SHALL BE PROTECTED FROM ALL CONSTRUCTION ACTIVITIES. PROTECTION ZONES SHALL BE IDENTIFIED ON THE PROPERTY BY USING STANDARD ORANGE BARRICADE FENCING 4' IN HEIGHT AND SUPPORTED WITH CHANNEL POSTS.
7. ALL LAND AREAS NOT COVERED BY BUILDING OR PAVEMENT SHALL BE BROUGHT TO FINISH GRADE AND PLANTED IN SOD OR OTHER APPROPRIATE GROUND COVERS.

PLANTING PREPARATION

8. ALL PLANTING BEDS SHALL BE AMENDED WITH 1 CUBIC YARD OF PEAT MOSS PER 1,000 SQUARE FEET. TILL PEAT MOSS INTO SOIL TO A 18" DEPTH.
9. PLANT PIT BACKFILL FOR TREES AND SHRUBS SHALL BE 1/3 TOPSOIL AND 2/3 EXISTING SOIL. ADD 3 MYCHORIZZAL TABLETS IN PIT FOR EACH TREE.
10. PLANTED BED EDGES SHALL BE IN STRAIGHT LINES OR GENTLE FLOWING CURVES AS DESIGNED. SUDDEN CURVES OR SHARP ANGLES SHOULD BE AVOIDED.
11. MOUND ALL PLANTING BEDS NOT ADJACENT TO BUILDINGS. PROVIDE POSITIVE DRAINAGE AROUND ALL PLANTING BEDS.
12. FERTILIZE ALL PLANTS WITH 6-10-4 COMMERCIAL FERTILIZER AS DIRECTED BY INSTRUCTIONS ON FERTILIZER

PLANTING MATERIALS

13. ALL PLANT MATERIAL SHALL BE WELL-FORMED AND DEVELOPED IN GOOD CONDITION, HEALTHY AND DISEASE-FREE, AND BE TYPICAL OF THE SPECIES. PLANTS SHALL COMPLY WITH ACCEPTABLE STANDARDS AS SET FORTH IN THE AMERICAN ASSOCIATION OF NURSERYMAN'S "AMERICAN STANDARD OF NURSERY STOCK."
14. ALL PLANT MATERIALS SHALL BE PROTECTED FROM THE DRYING ACTION OF THE SUN AND WIND AFTER BEING DUG, WHILE BEING TRANSPORTED, AND WHILE AWAITING PLANTING. BALLS OF PLANTS WHICH CANNOT BE PLANTED IMMEDIATELY SHALL BE PROTECTED FROM DRYING ACTION BY COVERING THEM WITH MOIST MULCH. PERIODICALLY, APPLY WATER TO MULCH-COVERED BALLS TO KEEP MOIST. IF PLANTING SHOULD OCCUR DURING GROWING SEASON, APPLY ANTI-DESSICANT TO LEAVES BEFORE TRANSPORT TO REDUCE LIKELIHOOD OF WINDBURN. REAPPLY ANTI-DESSICANT AFTER PLANTING TO REDUCE TRANSPIRATION.
15. PLANTS DESIGNATED CONTAINER GROWN SHALL HAVE BEEN GROWN IN POTS, CANS OR BOXES FOR A MINIMUM OF SIX MONTHS AND A MAXIMUM OF TWO YEARS. THESE PLANTS SHALL BE REMOVED FROM CONTAINERS BEFORE PLANTING. PLANTS THAT APPEAR ROOT-BOUND SHALL BE REJECTED.
16. ALL PLANT LOCATIONS ARE APPROXIMATE, ADJUST AS NECESSARY TO AVOID CONFLICTS. THE FOLLOWING APPLIES FOR GENERAL PLANT LOCATIONS:
    A. CREEPING GROUNDCOVER SHALL BE A MINIMUM OF 6" FROM PAVING EDGE.
    B. ALL TREES SHALL BE A MINIMUM OF 3' FROM PAVING EDGE.
    C. EQUALLY SPACE ALL PLANTS OF THE SAME SPECIES FOR BEST VIEWING.
    D. ALL SHRUBS SHALL BE A MINIMUM OF 2' FROM PAVING EDGE, AND 3.5' FROM BUILDINGS.

SEED/SOD

17. SOD SOD SHALL BE CERTIFIED TURFGRASS SOD COMPLYING WITH ASPA SPECIFICATIONS FOR MACHINE-CUT THICKNESS, SIZE, STRENGTH, MOSITURE CONTENT, AND MOWED HEIGHT, AND BE FREE OF WEEDS AND UNDESIRABLE NATIVE GRASSES. SOD SHALL BE A BLEND OF NOT LESS THAN 3 IMPROVED KENTUCKY BLUEGRASS (POSPARATENSIS) VARIETIES. A NATIVE MIXTURE OF HOUNDOG, REBEL, OR FALCON FINELEAFED TALL FESCUE (FESCUE ARUNDINADEA), AND RYE (LOLIUM JULTIFLORIUM AND PERENE DOMESTIC). IT SHALL BE A MIX OF 20% KENTUCKY BLUEGRASS, 70% FINELEAFED TALL FESCUE, AND 10% RYE. SOD SHALL BE WELL ROOTED, 2 YEAR OLD STOCK, HARVESTED IN ROLLS, and FERTILIZED 2-3 WEEKS PRIOR TO CUTTING. ALL SOD SHALL BE MACHINE CUT AND VIGOROUSLY GROWING (NOT DORMANT). MAXIMUM TIME FROM STRIPPING TO PLANTING SHALL BE 24 HOURS.
18. SEED ALL DISTURBED AREAS NOT MAKED AS "SOD" SHALL RECEIVE GREASS SEED. SEED SHALL COMPLY WITH US DEPT. OF AGRICULTURE RULES AND REGULATIONS UNDER THE FEDERAL SEED ACT AND EQUAL IN QUALITY TO STANDARDS FOR CERTIFIED SEED. SEED SHALL BE A TURF-TYPE FESCUE (3-WAY BLEND. SEED BLEND SHALL CONSIST OF THE FOLLOWING:

TURF-TYPE TALL FESCUE	85%
KENTUCKY BLUEGRASS	10%
ANNUAL RYEGRASS	5%

ALL SEEDED AREAS TO BE MULCHED WITH STRAW OR HYDROMULCH AT TIME OF INSTALLATION UNTIL SEED HAS ESTABLISHED.

RELATED ITEMS

19. MULCH: USE 3" SHREDDED HARDWOOD MULCH IN PLANTING BEDS AND AROUND TREES. MULCH SHALL CONSIST OF PURE WOOD PRODUCTS AND BE FREE OF ALL FOREIGN SUBSTANCES. PROVIDE AND INSTALL PRE-EMERGENT HERBICIDE PRIOR TO MULCH INSTALLATION PER MANUFACTURERS INSTRUCTIONS.
20. EDGING: ALL PLANT BEDS AND TURF AREAS MUST BE SEPARATED WITH A CULTIVATED EDGE.
21. TREE TIES: CONTRACTOR SHALL USE AN APPROVED TREE TIE SYSTEM THAT IS EASILY ADJUSTABLE, STRONG IN ALL WEATHER, AND EASILY ATTACHED AND REMOVED. HOSE AND WIRE ARE NOT ACCEPTABLE FOR STAKED TREES.

    PROVIDE THE FOLLOWING, OR APPROVED EQUAL:

"CINCH TIES,"	J. LICHTENTHALER
"ADJ-A-TYPE,"	HEAVYWEIGHT ONLY, A PLASTIC TWIST TIE
"PLATIC BINDER TYE.	TIE WITH TAPERED BEADS THAT SNAP LOCK, A.M. LEONARD AND SONS.

22. ANNUALS: ANNUAL PLANT SELECTION SHALL BE APPROVED BY OWNER. SPECIES CHOSEN SHALL BE APPROPRIATE FOR SEASON OF INSTALLATION.

MAINTENANCE AND CLEAN-UP

23. THE CONTRACTOR SHALL PROVIDE ALL WATER, WATERING DEVICES AND LABOR NEEDED TO IRRIGATE PLANT MATERIALS UNTIL PROVISIONAL ACCEPTANCE OF THE PROJECT. THE CONTRACTOR SHALL SUPPLY ENOUGH WATER TO MAINTAIN THE PLANT'S HEALTHY CONDITION.
24. REMOVE ALL RUBBISH, EQUIPMENT, AND MATERIAL AND LEAVE THE AREA IN A NEAT, CLEAN CONDITION EACH DAY. MAINTAIN PAVED AREAS UTILIZED FOR HAULING EQUIPMENT AND MATERIALS BY OTHER TRADES IN A CLEAN AND UNOBSTRUCTED CONDITION AT ALL TIMES. REMOVE SOIL OR DIRT THAT ACCUMULATES DUE TO PLANTING OPERATIONS EACH DAY.

INSPECTION, WARRANTIES AND GUARANTEE

25. AT THE COMPLETION OF PLANTING OPERATIONS ALL PLANTS SHALL BE INSPECTED BY THE OWNER'S REPRESENTATIVE. CONTRACTOR SHALL REPLACE IMMEDIATELY ANY PLANTS NOT IN HEALTHY AND VIGOROUS CONDITION AT THAT TIME AT NO EXPENSE TO THE OWNER. ANY PLANT NOT IN HEALTHY CONDITION AFTER ONE FULL YEAR FROM THE DATE OF FINAL ACCEPTANCE SHALL BE REPLACED AS PER THE ORIGINAL SPECIFICATIONS, FREE OF CHARGE TO THE OWNER.
26. OWNER'S REPRESENTATIVE RESERVES THE RIGHT TO REJECT AT ANY TIME OR PLACE PRIOR TO FINAL ACCEPTANCE OF WORK, ANY AND ALL PLANTS WHICH, IN THEIR OPINION, FAIL TO MEET THESE SPECIFICATION REQUIREMENTS.
27. CONTRACTOR SHALL GUARANTEE TREES, SHRUBS, PERENNIALS AND TURF FOR ONE CALENDAR YEAR FOLLOWING PROVISIONAL ACCEPTANCE OF THE OVERALL PROJECT. DURING THE GUARANTEE PERIOD, PLANTS THAT DIE DUE TO NATURAL CAUSES OR THAT ARE UNHEALTHY OR UNSIGHTLY IN CONDITION, SHALL BE REPLACED BY THE CONTRACTOR. PLANTS USED FOR THE REPLACEMENT SHALL BE OF THE SAME VARIETY AND SIZE AS ORIGINALLY SPECIFIED IN THE PLANT SCHEDULE. REPLACEMENTS SHALL BE MADE WITHIN ONE WEEK OF REQUEST PENDING FAVORABLE SEASONAL PLANTING CONDITIONS. GUARANTEE WILL NOT BE ENFORCED SHOULD THE PLANT MATERIAL DIE DUE TO VANDALISM, OVER OR UNDER WATERING BY THE OWNER, IMPROPER MAINTENANCE PROCEDURES CARRIED OUT BY THE OWNER INVOLVING LAWN MOWER DAMAGE, OVER FERTILIZATION, ACTS NOT RELATED TO CONTRACTUAL RESPONSIBILITIES OF CONTRACTOR OR SIMILAR CIRCUMSTANCES BEYOND THE CONTROL OF THE CONTRACTOR.

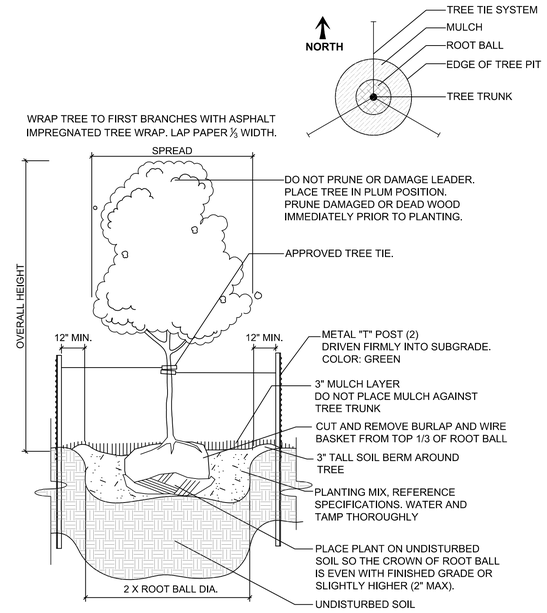

1 Deciduous Tree Planting Detail

SCALE: NTS

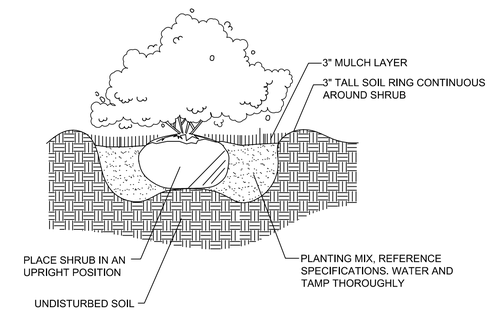

2 Shrub Planting Detail

SCALE: NTS

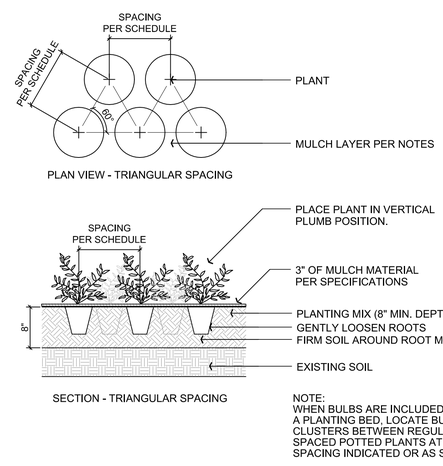

NOTE:
WHEN BULBS ARE INCLUDED IN A PLANTING BED, LOCATE BULB CLUSTERS BETWEEN REGULARLY SPACED POTTED PLANTS AT SPACING INDICATED OR AS SHOWN.

3 Plant Spacing Detail

SCALE: NTS

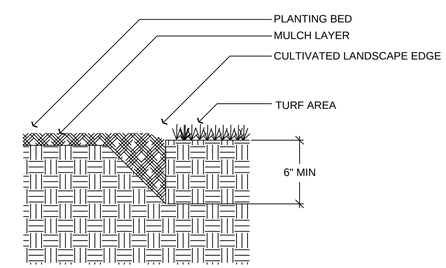

4 Cultivated Edge Detail

SCALE: NTS

NO.	DATE	REVISIONS	BY	APP'D
1				
2				
3				
4				
5				

COPYRIGHT © -2016- SHAFER, KLINE & WARREN INC.

Designed By:
Drawn By:
Checked By:
Issue Date:

SHAFER, KLINE & WARREN
11250 Corporate Avenue
Lenexa, KS 66219-1392
913.888.7800 FAX:913.888.7868
SURVEYING | ENGINEERING | CONSTRUCTION

CLEAR CREEK PARKWAY
CITY OF SHAWNEE, KANSAS

LANDSCAPE PLAN
PLANTING DETAILS

150561-010

SHEET NO.
4 OF 4

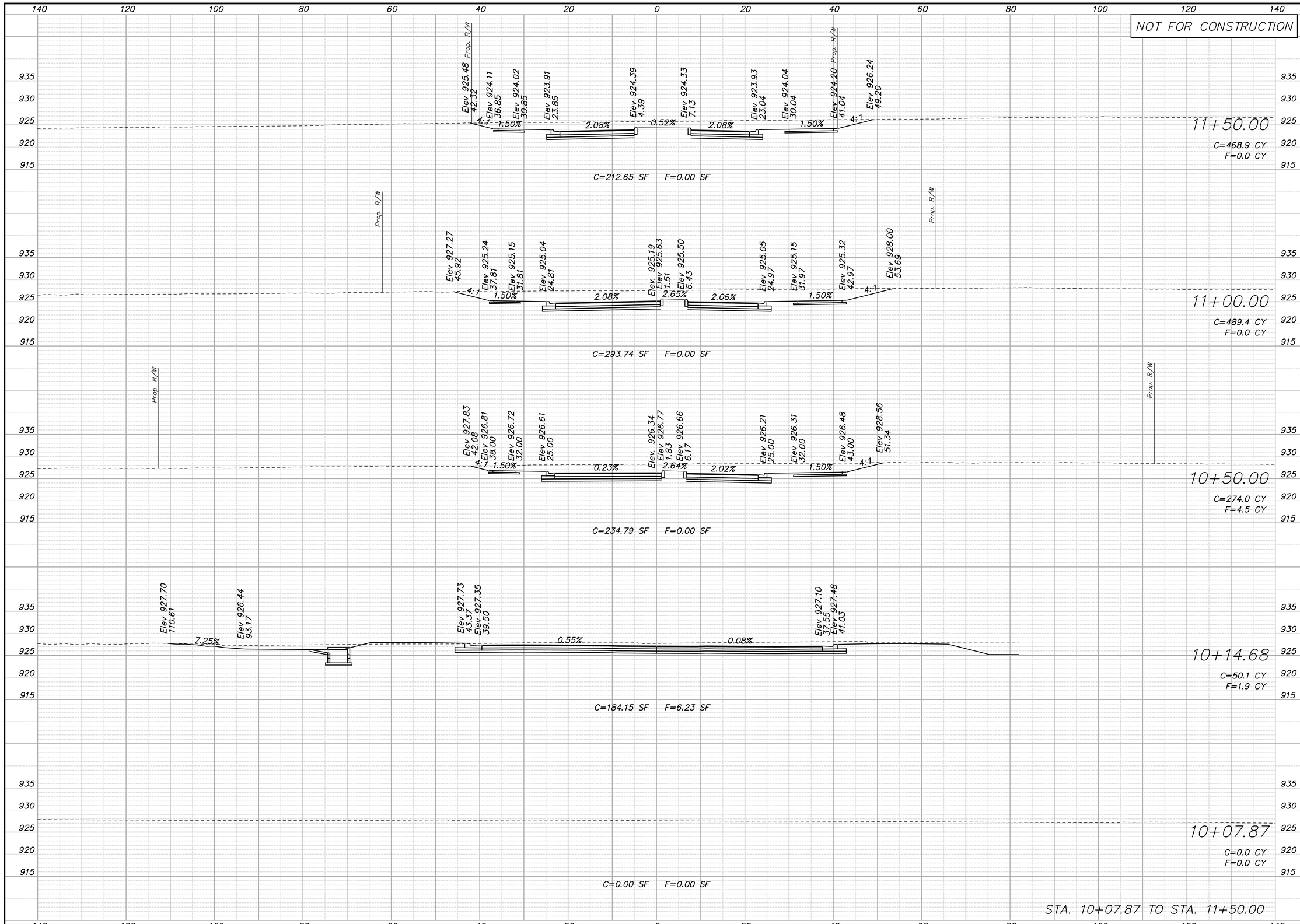

REV.	DATE	REVISIONS	BY	APP'D
5				
4				
3				
2				
1				

COPYRIGHT © -2016-SHAFER, KLINE & WARREN INC.

Designed By: PRP
Drawn By: JCK/JAA
Checked By: HDL
Issue Date: SEPT. 2016

SHAFER, KLINE & WARREN
11250 Corporate Avenue
Lenexa, KS 66219-1392
913.888.7800 FAX: 913.888.7868
SURVEYING | ENGINEERING | CONSTRUCTION

CLEAR CREEK PARKWAY
CITY OF SHAWNEE, KANSAS

CLEAR CREEK PARKWAY
CROSS SECTIONS

150561-010

SHEET NO.
138 OF 182

LAYOUT: MODEL | BY: jadams | DATE: 20-SEP-2016 10:37:07 AM
L:\150561-010_Cad\Civil\Cross Sections Main Line\150561-010_XS-Clear-Creek-Sheets.dgn

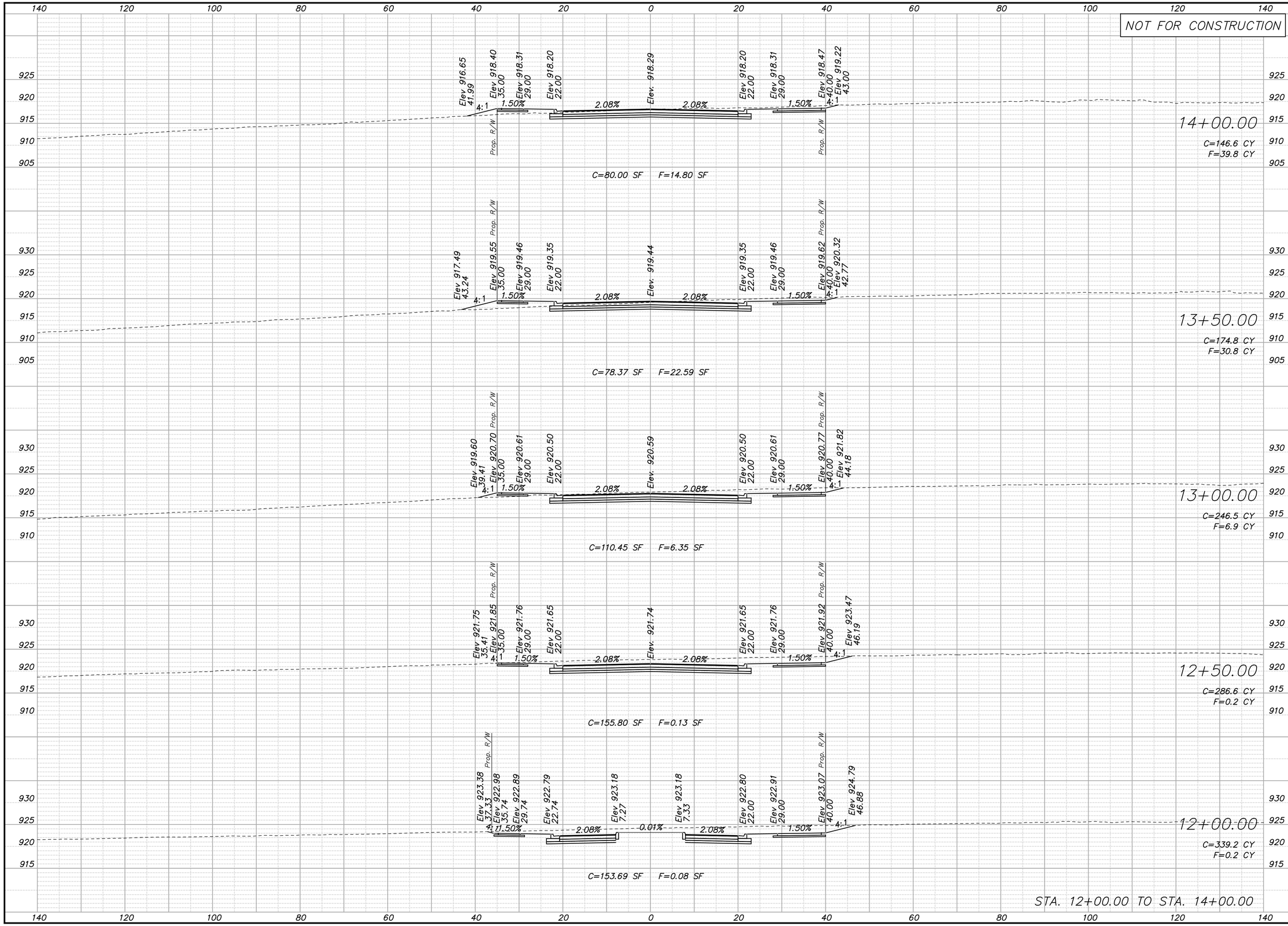

REV.	DATE	REVISIONS	BY	APP'D
5				
4				
3				
2				
1				

COPYRIGHT © -2016-SHAFER, KLINE & WARREN INC.

Designed By: PRP
Drawn By: JCK/JAA
Checked By: HDL
Issue Date: SEPT. 2016

SHAFER, KLINE & WARREN
11250 Corporate Avenue
Lenexa, KS 66219-1392
913.888.7800 FAX: 913.888.7868
SURVEYING | ENGINEERING | CONSTRUCTION

CLEAR CREEK PARKWAY
CITY OF SHAWNEE, KANSAS

CLEAR CREEK PARKWAY
CROSS SECTIONS

150561-010

SHEET NO.
139 OF 182

LAYOUT: MODEL | BY: jadams | DATE: 20-SEP-2016 10:37:08 AM
L:\150561-010_Cad\Civil\Cross Sections Main Line\150561-010_XS-Clear-Creek-Sheets.dgn

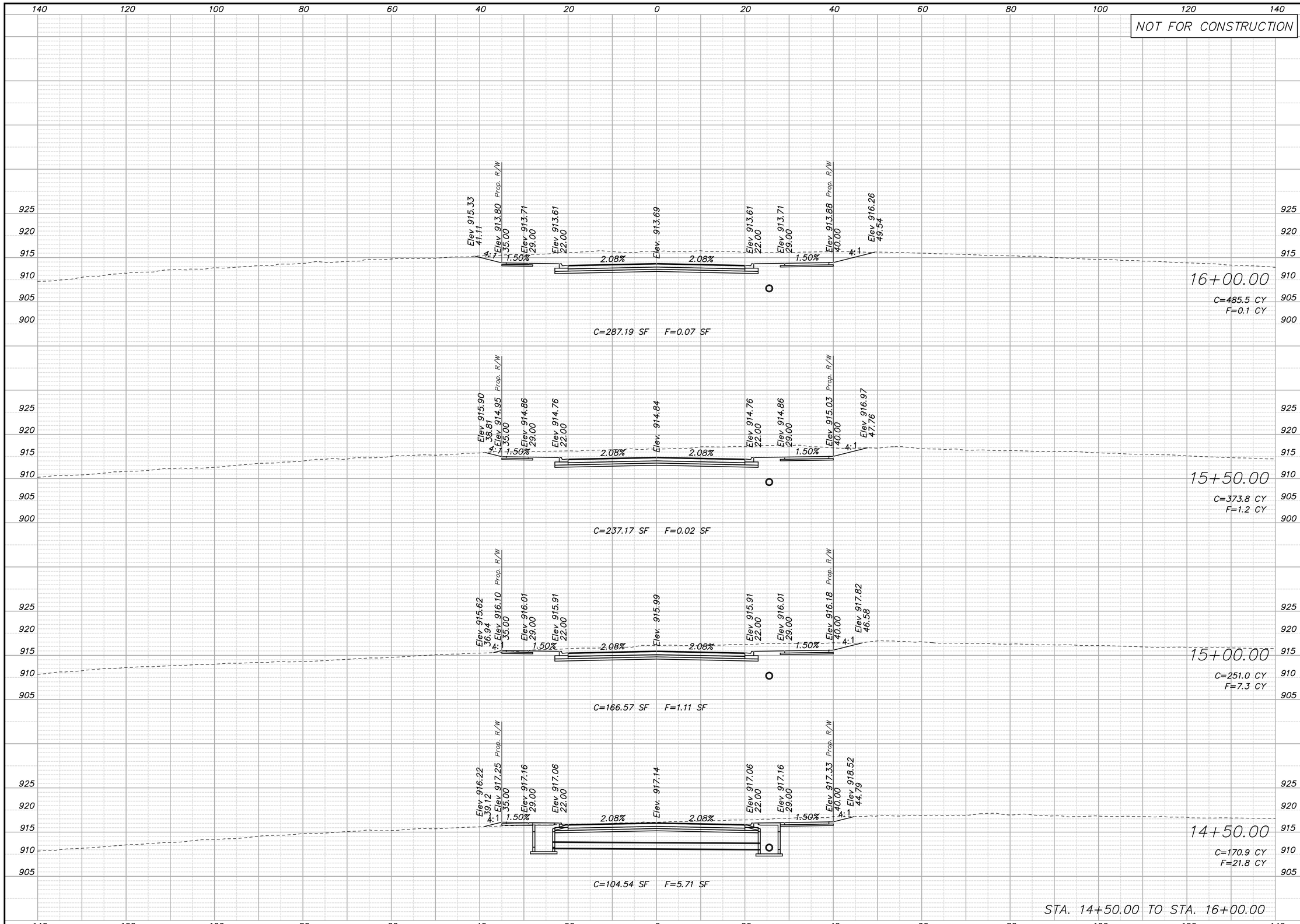

REV.	DATE	REVISIONS	BY	APP'D
5				
4				
3				
2				
1				

COPYRIGHT © -2016-SHAFER, KLINE & WARREN INC.

Designed By: PRP
Drawn By: JCK/JAA
Checked By: HDL
Issue Date: SEPT. 2016

SHAFER, KLINE & WARREN
11250 Corporate Avenue
Lenexa, KS 66219-1392
913.888.7800 FAX: 913.888.7868
SURVEYING | ENGINEERING | CONSTRUCTION

CLEAR CREEK PARKWAY
CITY OF SHAWNEE, KANSAS

CLEAR CREEK PARKWAY
CROSS SECTIONS

150561-010

SHEET NO.
140 OF 182

LAYOUT: MODEL | BY: jadams | DATE: 20-SEP-2016 10:37:09 AM
L:\150561-010_Cad\Civil\Cross Sections Main Line\150561-010_XS-Clear-Creek-Sheets.dgn

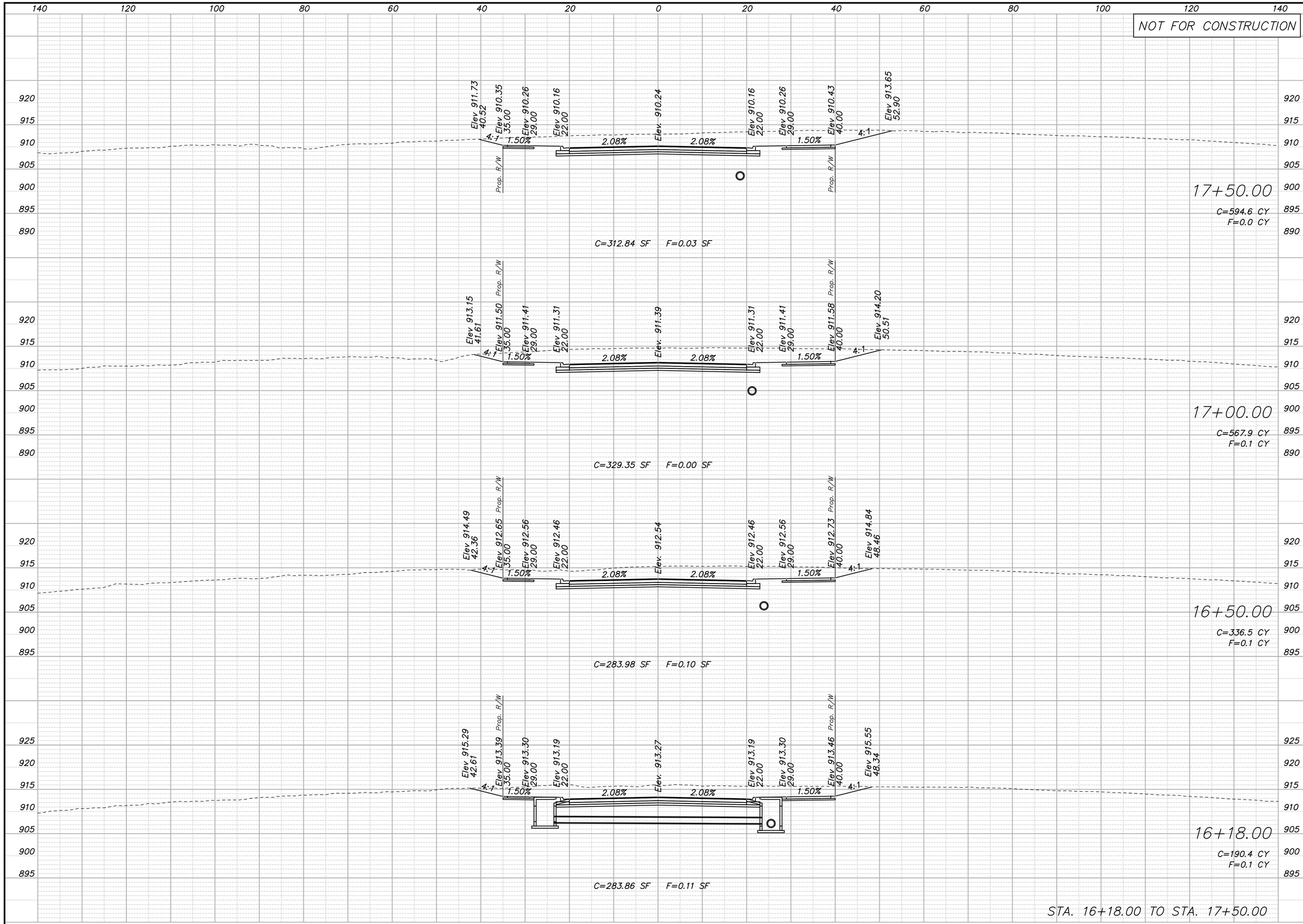

REV.	DATE	REVISIONS	BY	APP'D
5				
4				
3				
2				
1				

COPYRIGHT © -2016-SHAFER, KLINE & WARREN INC.

Designed By: PRP
Drawn By: JCK/JAA
Checked By: HDL
Issue Date: SEPT. 2016

SHAFER, KLINE & WARREN
11250 Corporate Avenue
Lenexa, KS 66219-1392
913.888.7800 FAX: 913.888.7868
SURVEYING | ENGINEERING | CONSTRUCTION

CLEAR CREEK PARKWAY
CITY OF SHAWNEE, KANSAS

CLEAR CREEK PARKWAY
CROSS SECTIONS

150561-010

SHEET NO.
141 OF 182

LAYOUT: MODEL | BY: jadams | DATE: 20-SEP-2016 10:37:11 AM
L:\150561-010_Cad\Civil\Cross Sections Main Line\150561-010_XS-Clear-Creek-_Sheets.dgn

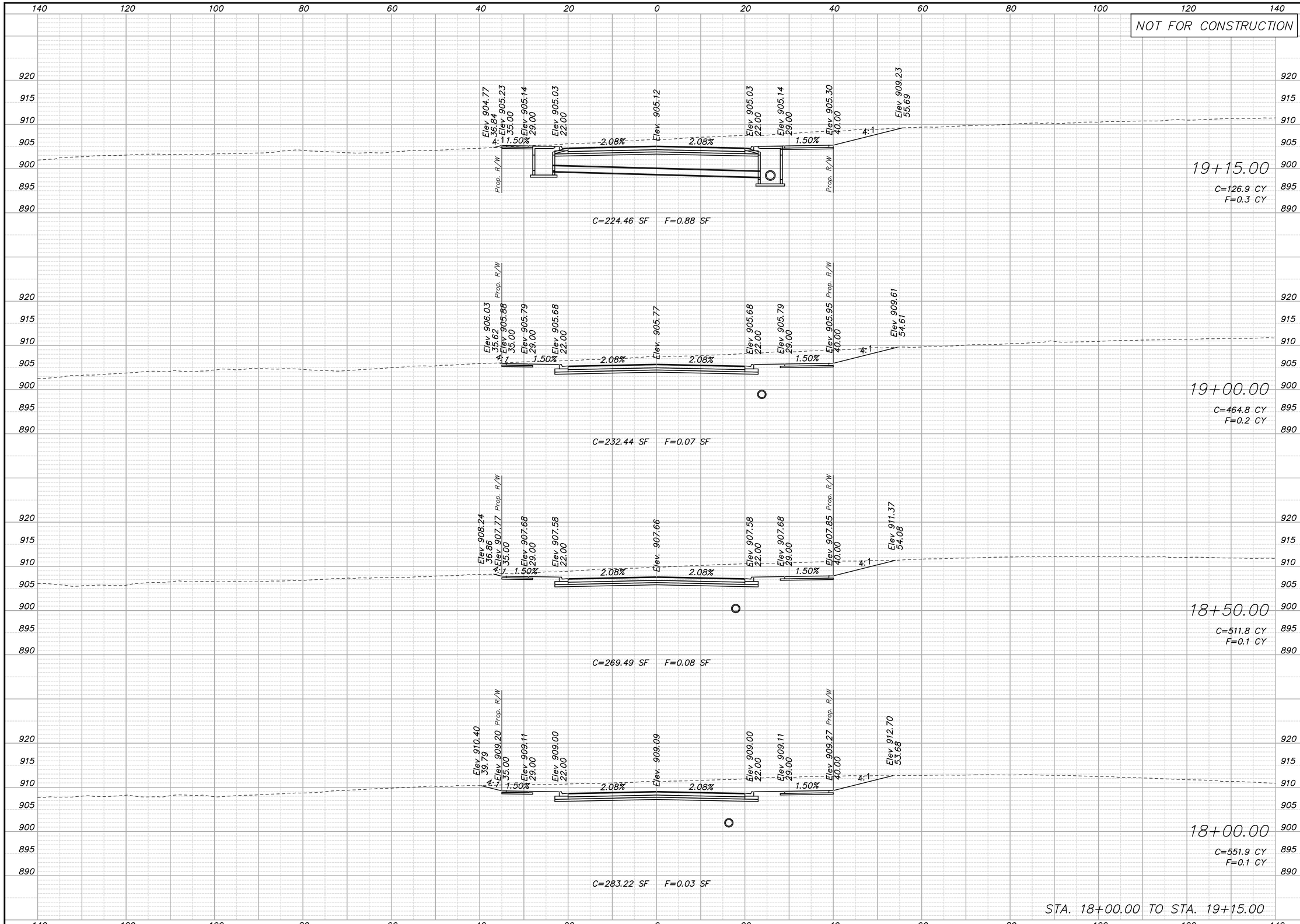

REV.	DATE	REVISIONS	BY	APP'D
5				
4				
3				
2				
1				

COPYRIGHT © -2016-SHAFER, KLINE & WARREN INC.

Designed By: PRP
Drawn By: JCK/JAA
Checked By: HDL
Issue Date: SEPT. 2016

SHAFER, KLINE & WARREN
11250 Corporate Avenue
Lenexa, KS 66219-1392
913.888.7800 FAX: 913.888.7868
SURVEYING | ENGINEERING | CONSTRUCTION

CLEAR CREEK PARKWAY
CITY OF SHAWNEE, KANSAS

CLEAR CREEK PARKWAY
CROSS SECTIONS

150561-010

SHEET NO.
142 OF 182

LAYOUT: MODEL | BY: jadams | DATE: 20-SEP-2016 10:37:12 AM
L:\150561-010_Cad\Civil\Cross Sections Main Line\150561-010_XS-Clear-Creek-Sheets.dgn

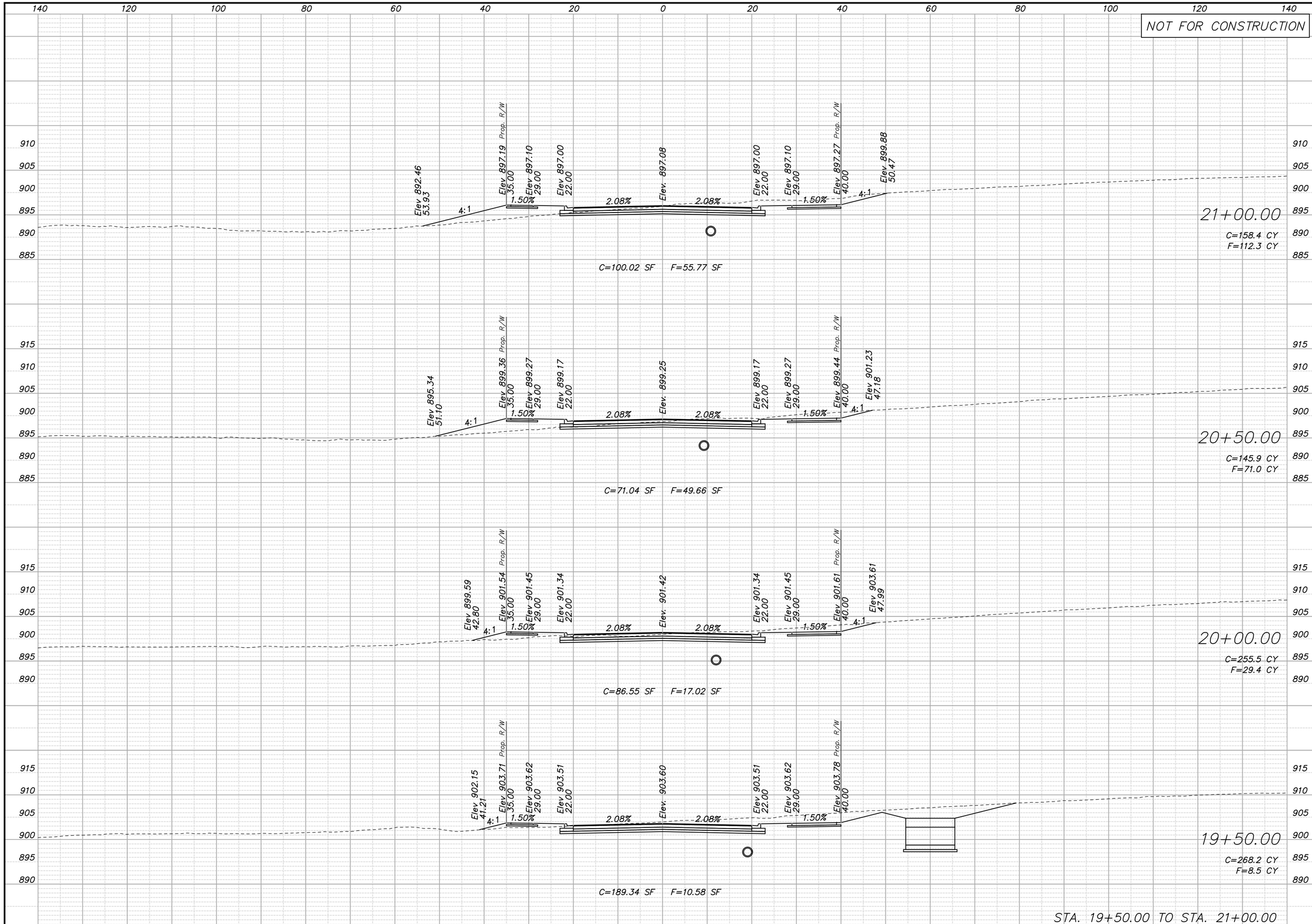

REV.	DATE	REVISIONS	BY	APP'D
5				
4				
3				
2				
1				

COPYRIGHT © -2016-SHAFER, KLINE & WARREN INC.

Designed By: PRP
Drawn By: JCK/JAA
Checked By: HDL
Issue Date: SEPT. 2016

SHAFER, KLINE & WARREN
11250 Corporate Avenue
Lenexa, KS 66219-1392
913.888.7800 FAX: 913.888.7868
SURVEYING | ENGINEERING | CONSTRUCTION

CLEAR CREEK PARKWAY
CITY OF SHAWNEE, KANSAS

CLEAR CREEK PARKWAY
CROSS SECTIONS

150561-010

SHEET NO.
143 OF 182

LAYOUT: MODEL | BY: jadams | DATE: 20-SEP-2016 10:37:13 AM
L:\150561-010_Cad\Civil\Cross Sections Main Line\150561-010_XS-Clear-Creek-Sheets.dgn

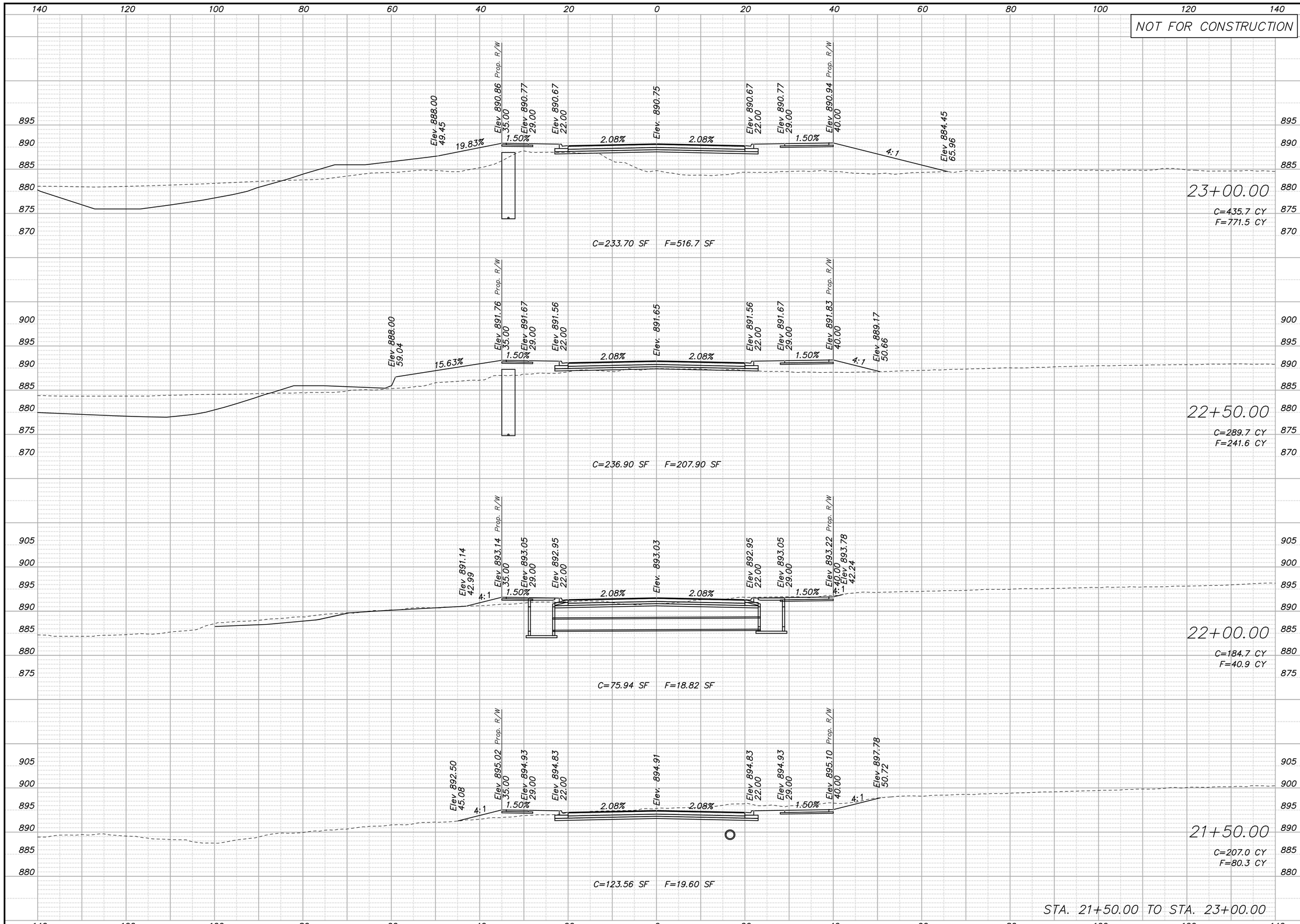

REV.	DATE	REVISIONS	BY	APP'D
5				
4				
3				
2				
1				

Designed By: PRP
Drawn By: JCK/JAA
Checked By: HDL
Issue Date: SEPT. 2016

COPYRIGHT © -2016-SHAFER, KLINE & WARREN INC.

SHAFER, KLINE & WARREN
11250 Corporate Avenue
Lenexa, KS 66219-1392
913.888.7800 FAX: 913.888.7868
SURVEYING | ENGINEERING | CONSTRUCTION

CLEAR CREEK PARKWAY
CITY OF SHAWNEE, KANSAS

CLEAR CREEK PARKWAY
CROSS SECTIONS

150561-010

SHEET NO.
144 OF 182

LAYOUT: MODEL | BY: jadams | DATE: 20-SEP-2016 10:37:14 AM
L:\150561-010_Cad\Civil\Cross Sections Main Line\150561-010_XS-Clear-Creek-Sheets.dgn

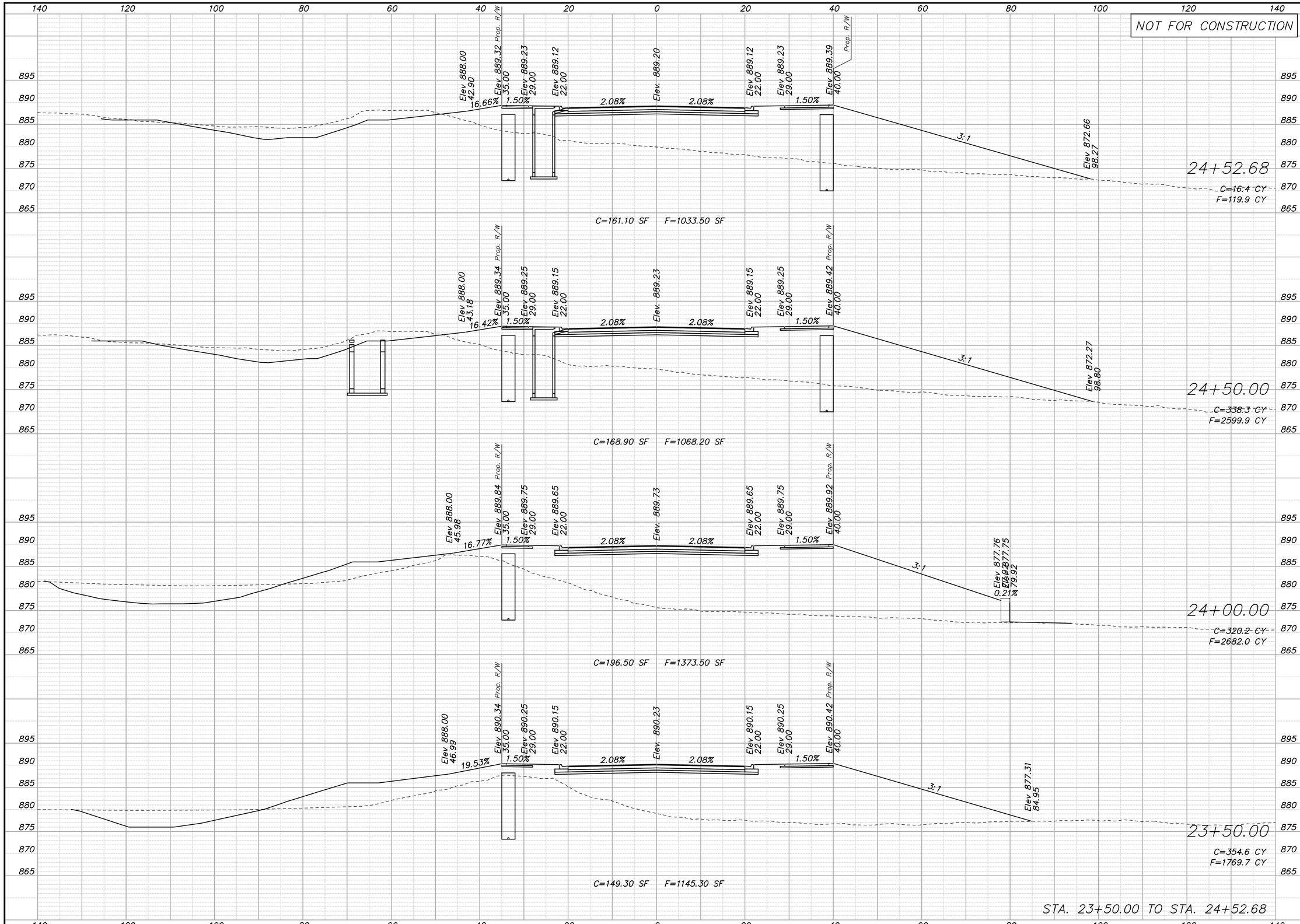

REV.	DATE	REVISIONS	BY	APP'D
5				
4				
3				
2				
1				

COPYRIGHT © -2016-SHAFER, KLINE & WARREN INC.

Designed By: PRP
Drawn By: JCK/JAA
Checked By: HDL
Issue Date: SEPT. 2016

SHAFER, KLINE & WARREN
11250 Corporate Avenue
Lenexa, KS 66219-1392
913.888.7800 FAX: 913.888.7868
SURVEYING | ENGINEERING | CONSTRUCTION

CLEAR CREEK PARKWAY
CITY OF SHAWNEE, KANSAS

CLEAR CREEK PARKWAY
CROSS SECTIONS

150561-010

SHEET NO.
145 OF 182

LAYOUT: MODEL | BY: jaddams | DATE: 20-SEP-2016 10:37:15 AM
L:\150561-010_Cad\Civil\Cross Sections Main Line\150561-010_XS-Clear-Creek-Sheets.dgn

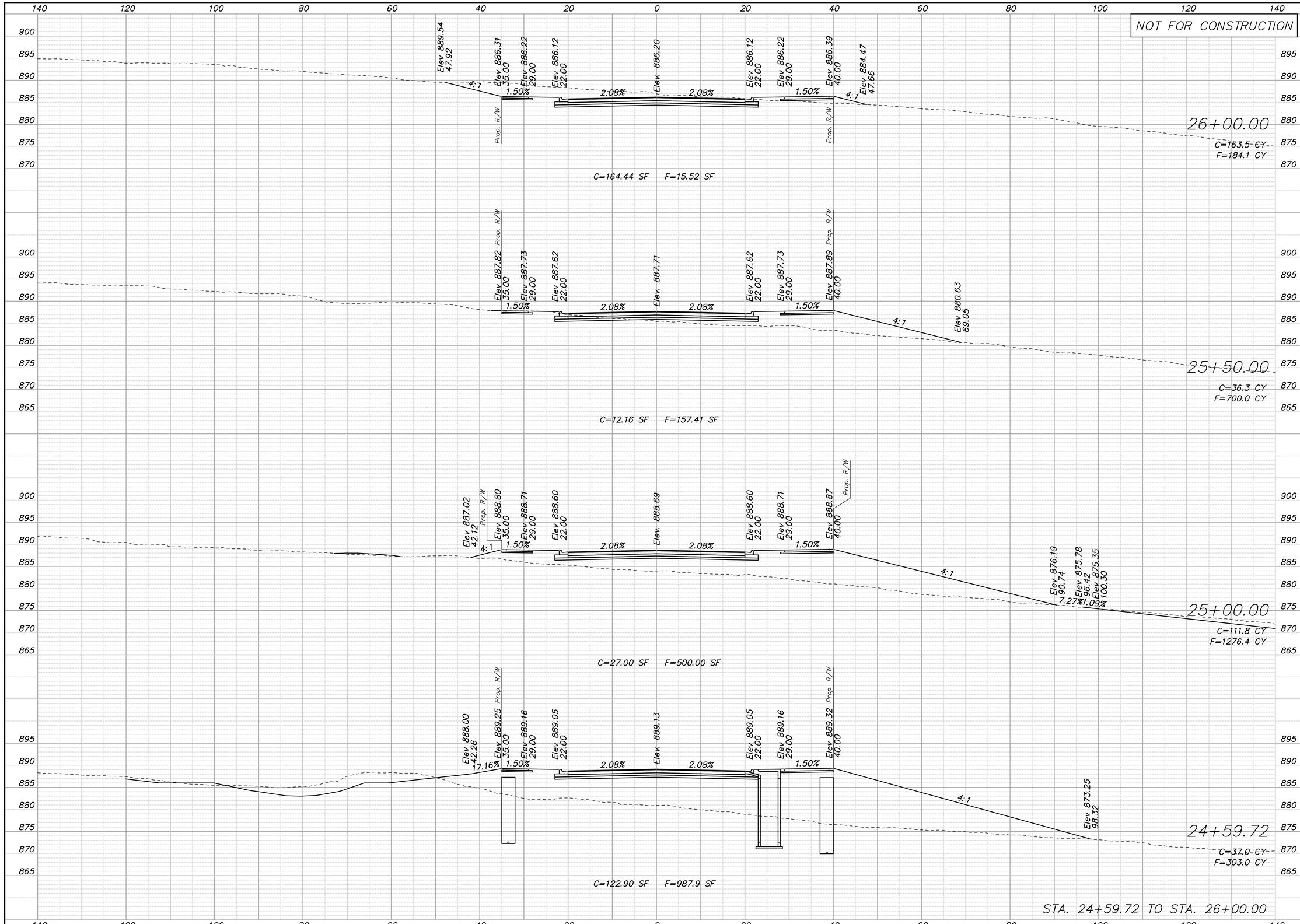

REV.	DATE	REVISIONS	BY	APP'D
5				
4				
3				
2				
1				

Designed By: PRP
Drawn By: JCK/JAA
Checked By: HDL
Issue Date: SEPT. 2016

COPYRIGHT © -2016-SHAFER, KLINE & WARREN INC.

SHAFER, KLINE & WARREN
11250 Corporate Avenue
Lenexa, KS 66219-1392
913.888.7800 FAX: 913.888.7868
SURVEYING | ENGINEERING | CONSTRUCTION

CLEAR CREEK PARKWAY
CITY OF SHAWNEE, KANSAS

CLEAR CREEK PARKWAY
CROSS SECTIONS

150561-010

SHEET NO.
146 OF 182

LAYOUT: MODEL | BY: jaddams | DATE: 20-SEP-2016 10:37:16 AM
L:\150561-010_Cad\Civil\Cross Sections Main Line\150561-010_XS-Clear-Creek-Sheets.dgn

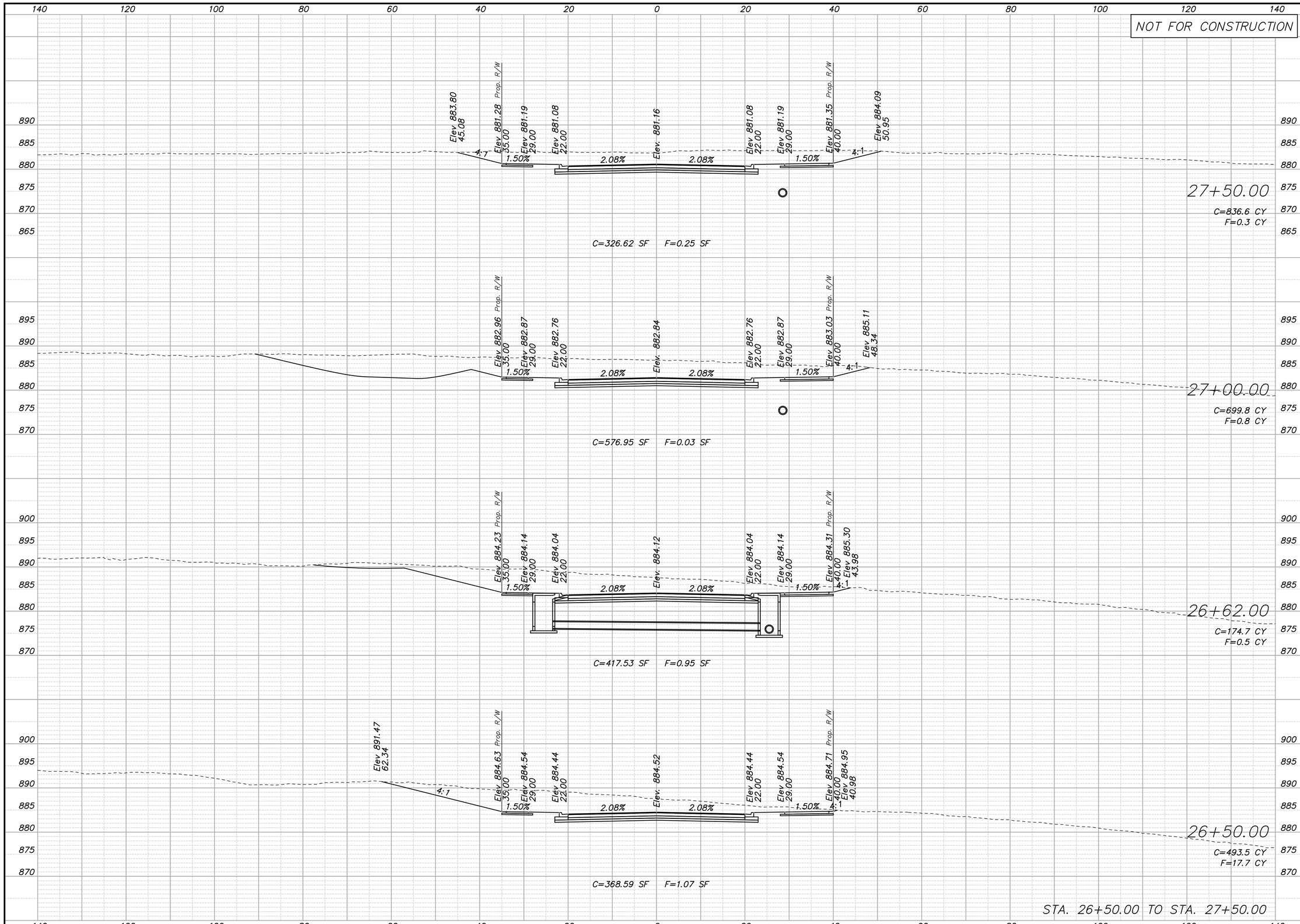

REV.	DATE	REVISIONS	BY	APP'D
5				
4				
3				
2				
1				

Designed By: PRP
Drawn By: JCK/JAA
Checked By: HDL
Issue Date: SEPT. 2016

COPYRIGHT © -2016-SHAFER, KLINE & WARREN INC.

SHAFER, KLINE & WARREN
11250 Corporate Avenue
Lenexa, KS 66219-1392
913.888.7800 FAX: 913.888.7868
SURVEYING | ENGINEERING | CONSTRUCTION

CLEAR CREEK PARKWAY
CITY OF SHAWNEE, KANSAS

CLEAR CREEK PARKWAY
CROSS SECTIONS

150561-010

SHEET NO.
147 OF 182

LAYOUT: MODEL | BY: jadams | DATE: 20-SEP-2016 10:37:17 AM
L:\150561-010_Cad\Civil\Cross Sections Main Line\150561-010_XS-Clear-Creek-Sheets.dgn

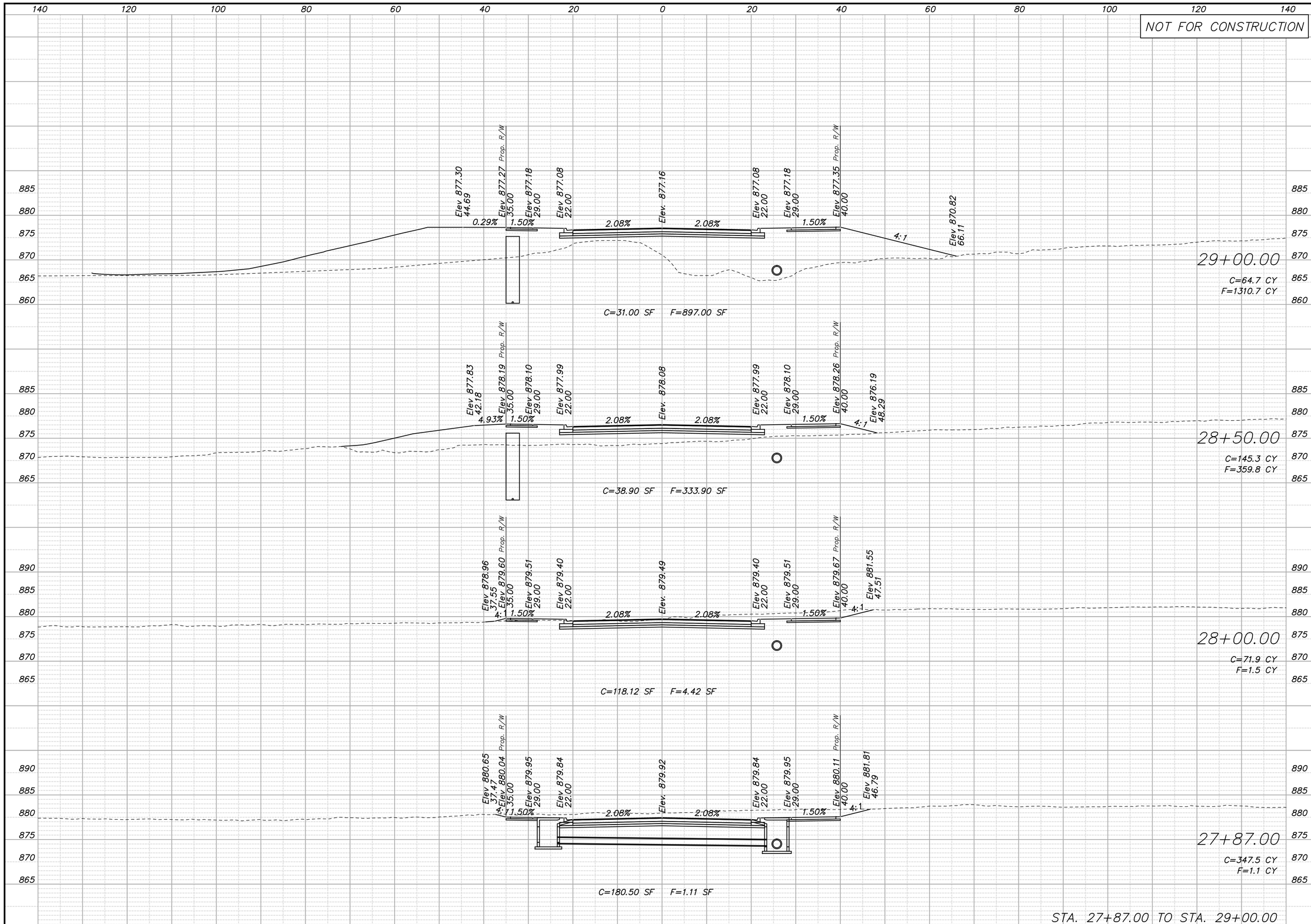

REV.	DATE	REVISIONS	BY	APP'D
5				
4				
3				
2				
1				

COPYRIGHT © -2016-SHAFER, KLINE & WARREN INC.

Designed By: PRP
Drawn By: JCK/JAA
Checked By: HDL
Issue Date: SEPT. 2016

SHAFER, KLINE & WARREN
11250 Corporate Avenue
Lenexa, KS 66219-1392
913.888.7800 FAX: 913.888.7868
SURVEYING | ENGINEERING | CONSTRUCTION

CLEAR CREEK PARKWAY
CITY OF SHAWNEE, KANSAS

CLEAR CREEK PARKWAY
CROSS SECTIONS

150561-010

LAYOUT: MODEL | BY: jadams | DATE: 20-SEP-2016 10:37:18 AM
L:\150561-010_Cad\Civil\Cross Sections Main Line\150561-010_XS-Clear-Creek-Sheets.dgn

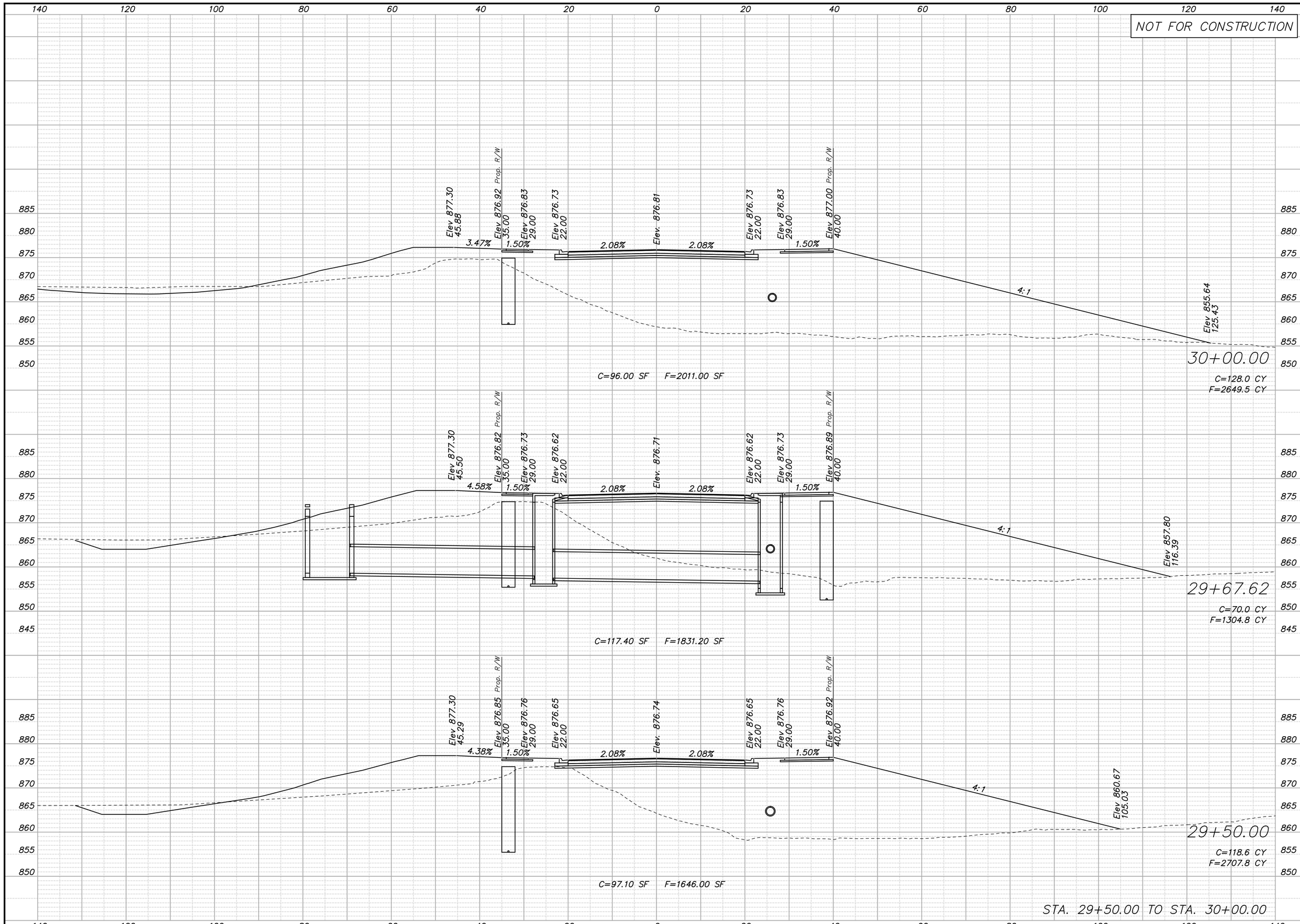

REV.	DATE	REVISIONS	BY	APP'D
5				
4				
3				
2				
1				

Designed By: PRP
Drawn By: JCK/JAA
Checked By: HDL
Issue Date: SEPT. 2016

COPYRIGHT © -2016-SHAFER, KLINE & WARREN INC.

SHAFER, KLINE & WARREN
11250 Corporate Avenue
Lenexa, KS 66219-1392
913.888.7800 FAX: 913.888.7868
SURVEYING | ENGINEERING | CONSTRUCTION

CLEAR CREEK PARKWAY
CITY OF SHAWNEE, KANSAS

CLEAR CREEK PARKWAY
CROSS SECTIONS

150561-010

SHEET NO.
149 OF 182

LAYOUT: MODEL | BY: jadams | DATE: 20-SEP-2016 10:37:19 AM
L:\150561-010_Cad\Civil\Cross Sections Main Line\150561-010_XS-Clear-Creek-Sheets.dgn

NOT FOR CONSTRUCTION

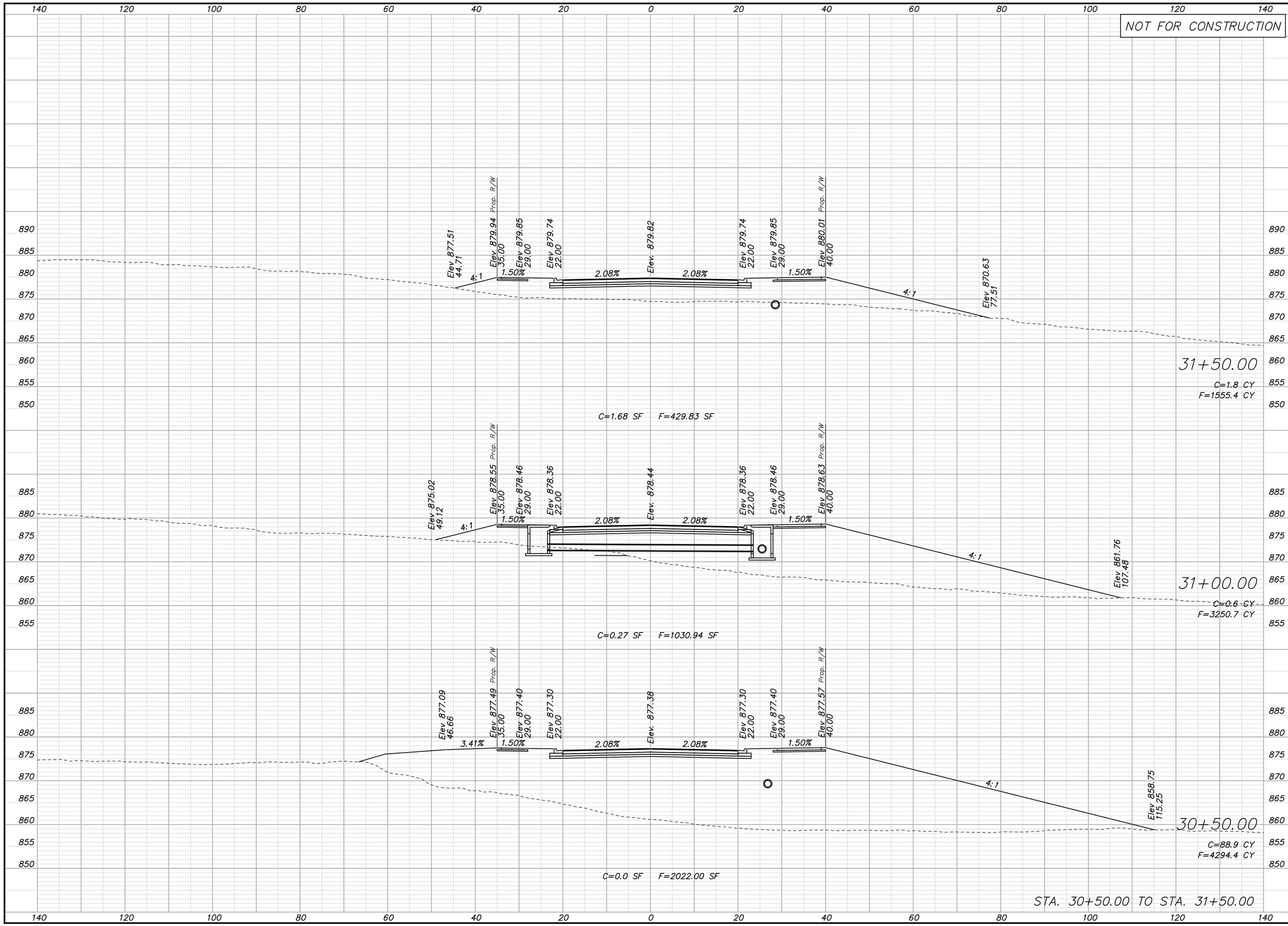

REV.	DATE	REVISIONS	BY	APP'D
5				
4				
3				
2				
1				

COPYRIGHT © -2016-SHAFER, KLINE & WARREN INC.

Designed By: PRP
Drawn By: JCK/JAA
Checked By: HDL
Issue Date: SEPT. 2016

SHAFER, KLINE & WARREN
11250 Corporate Avenue
Lenexa, KS 66219-1392
913.888.7800 FAX: 913.888.7868
SURVEYING | ENGINEERING | CONSTRUCTION

CLEAR CREEK PARKWAY
CITY OF SHAWNEE, KANSAS

CLEAR CREEK PARKWAY
CROSS SECTIONS

150561-010

SHEET NO.
150 OF 182

LAYOUT: MODEL | BY: jaddams | DATE: 20-SEP-2016 10:37:20 AM
L:\150561-010_Cad\Civil\Cross Sections Main Line\150561-010_XS-Clear-Creek-Sheets.dgn

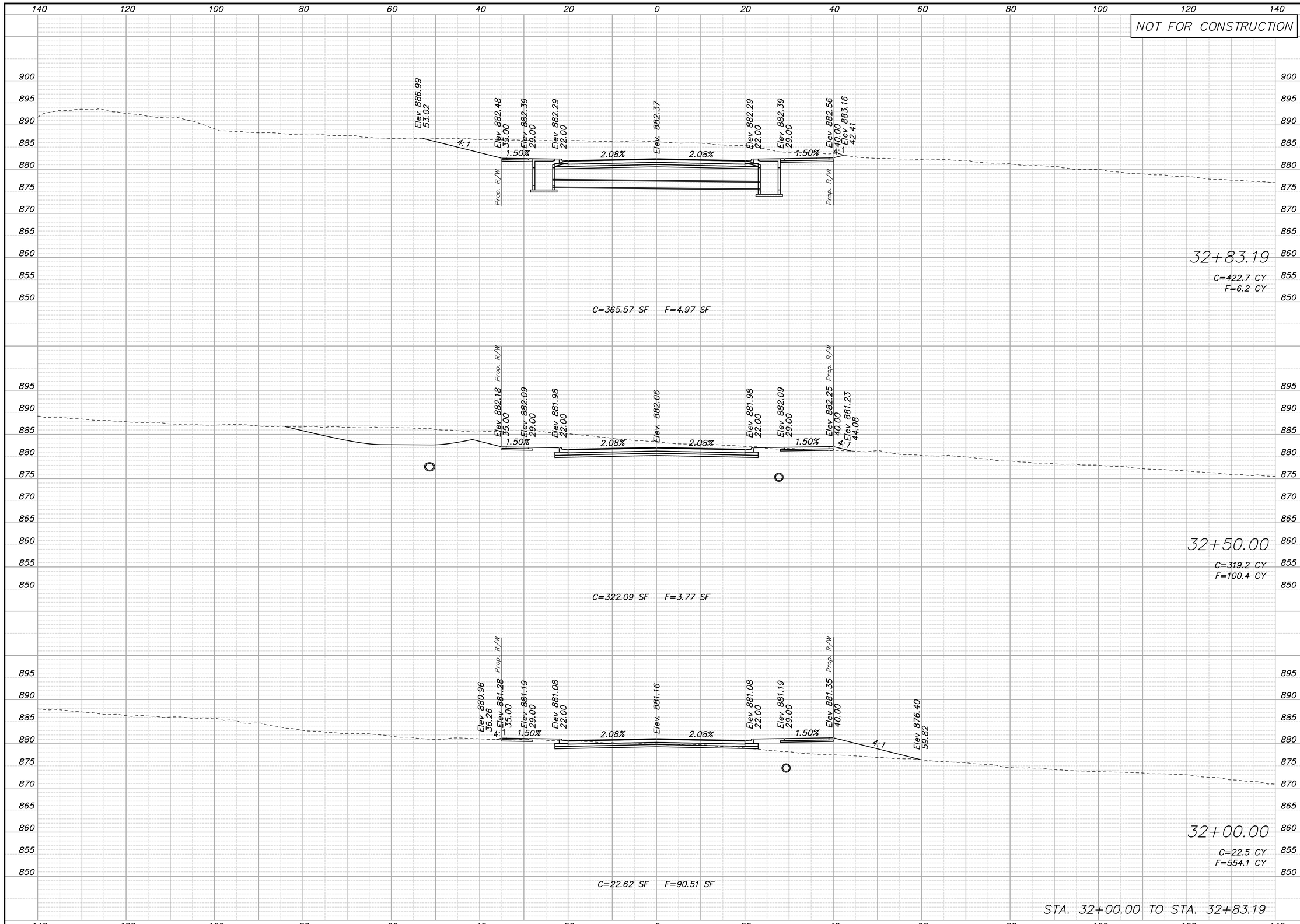

REV.	DATE	REVISIONS	BY	APP'D
5				
4				
3				
2				
1				

Designed By: PRP
Drawn By: JCK/JAA
Checked By: HDL
Issue Date: SEPT. 2016

COPYRIGHT © -2016-SHAFER, KLINE & WARREN INC.

SHAFER, KLINE & WARREN
11250 Corporate Avenue
Lenexa, KS 66219-1392
913.888.7800 FAX: 913.888.7868
SURVEYING | ENGINEERING | CONSTRUCTION

CLEAR CREEK PARKWAY
CITY OF SHAWNEE, KANSAS

CLEAR CREEK PARKWAY
CROSS SECTIONS

150561-010

SHEET NO.
151 OF 182

LAYOUT: MODEL | BY: jadams | DATE: 20-SEP-2016 10:37:22 AM
L:\150561-010_Cad\Civil\Cross Sections Main Line\150561-010_XS-Clear-Creek-Sheets.dgn

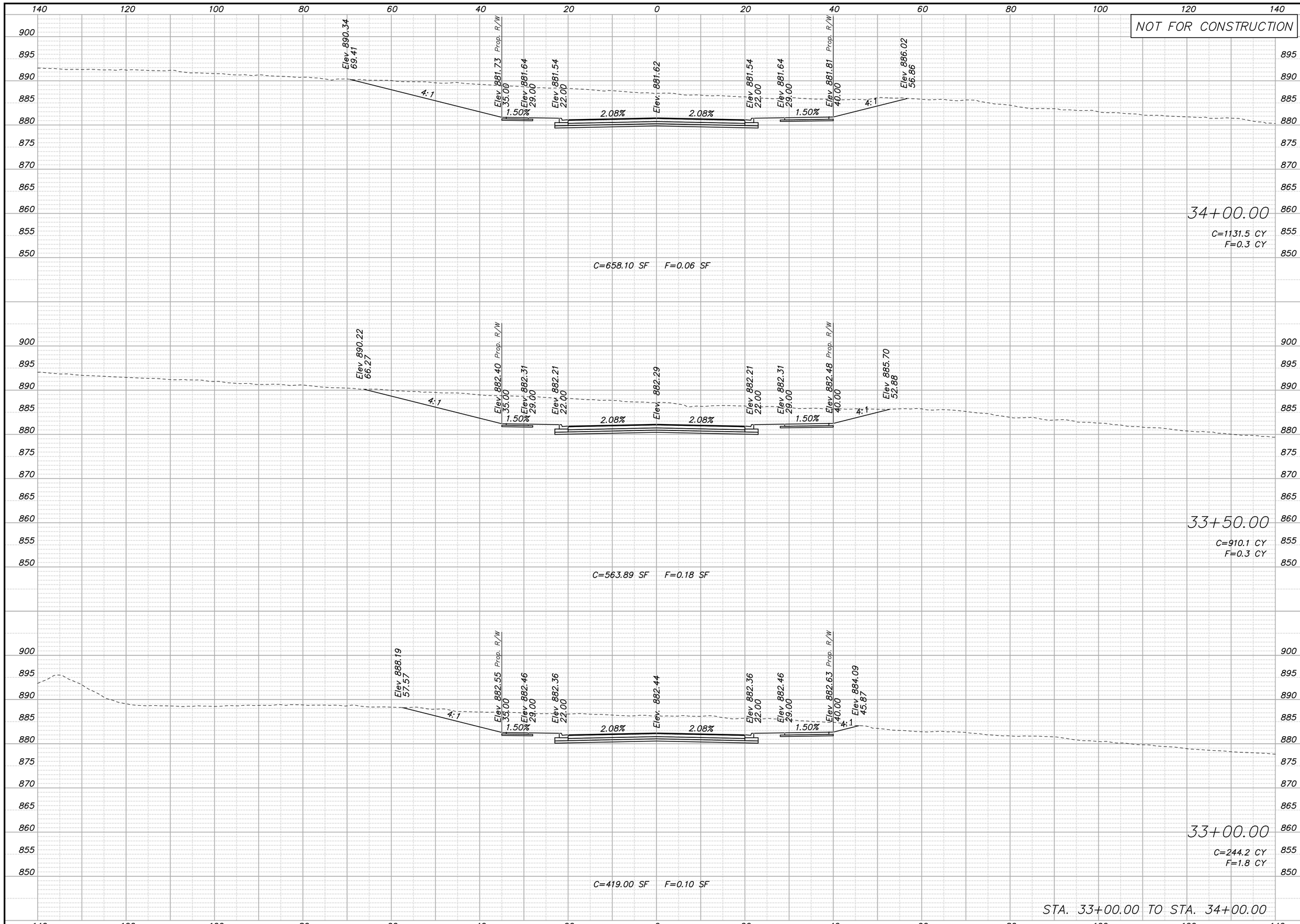

REV.	DATE	REVISIONS	BY	APP'D
5				
4				
3				
2				
1				

Designed By: PRP
Drawn By: JCK/JAA
Checked By: HDL
Issue Date: SEPT. 2016

COPYRIGHT © -2016-SHAFER, KLINE & WARREN INC.

SHAFER, KLINE & WARREN
11250 Corporate Avenue
Lenexa, KS 66219-1392
913.888.7800 FAX: 913.888.7868
SURVEYING | ENGINEERING | CONSTRUCTION

CLEAR CREEK PARKWAY
CITY OF SHAWNEE, KANSAS

CLEAR CREEK PARKWAY
CROSS SECTIONS

150561-010

SHEET NO.
152 OF 182

LAYOUT: MODEL | BY: jadams | DATE: 20-SEP-2016 10:37:23 AM
L:\150561-010_Cad\Civil\Cross Sections Main Line\150561-010_XS-Clear-Creek-Sheets.dgn

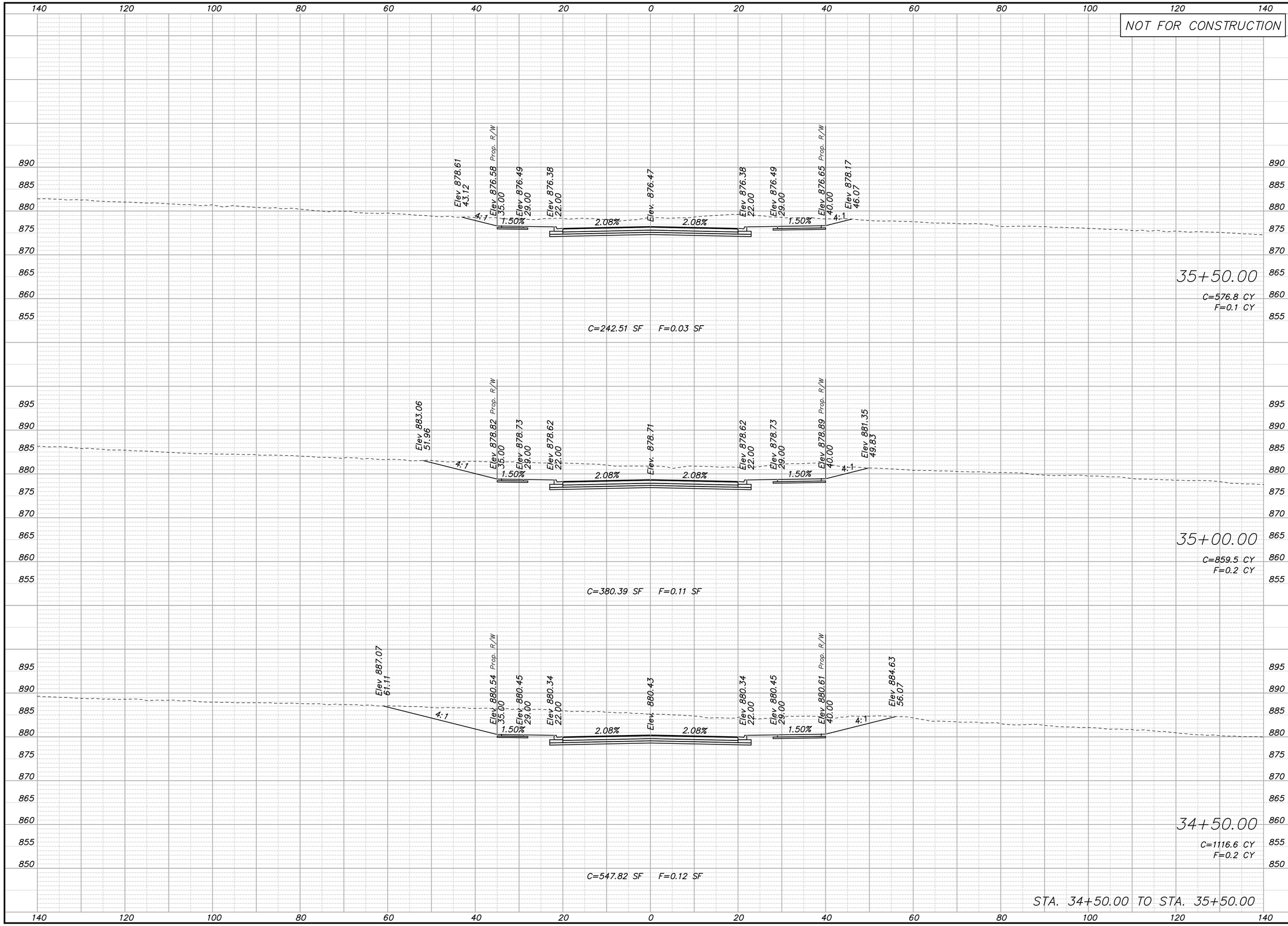

REV.	DATE	REVISIONS	BY	APP'D
5				
4				
3				
2				
1				

COPYRIGHT © -2016-SHAFER, KLINE & WARREN INC.

Designed By: PRP
Drawn By: JCK/JAA
Checked By: HDL
Issue Date: SEPT. 2016

SHAFER, KLINE & WARREN
11250 Corporate Avenue
Lenexa, KS 66219-1392
913.888.7800 FAX: 913.888.7868
SURVEYING | ENGINEERING | CONSTRUCTION

CLEAR CREEK PARKWAY
CITY OF SHAWNEE, KANSAS

CLEAR CREEK PARKWAY
CROSS SECTIONS

150561-010

SHEET NO.
153 OF 182

LAYOUT: MODEL | BY: jadams | DATE: 20-SEP-2016 10:37:29 AM
L:\150561-010_Cad\Civil\Cross Sections Main Line\150561-010_XS-Clear-Creek-Sheets.dgn

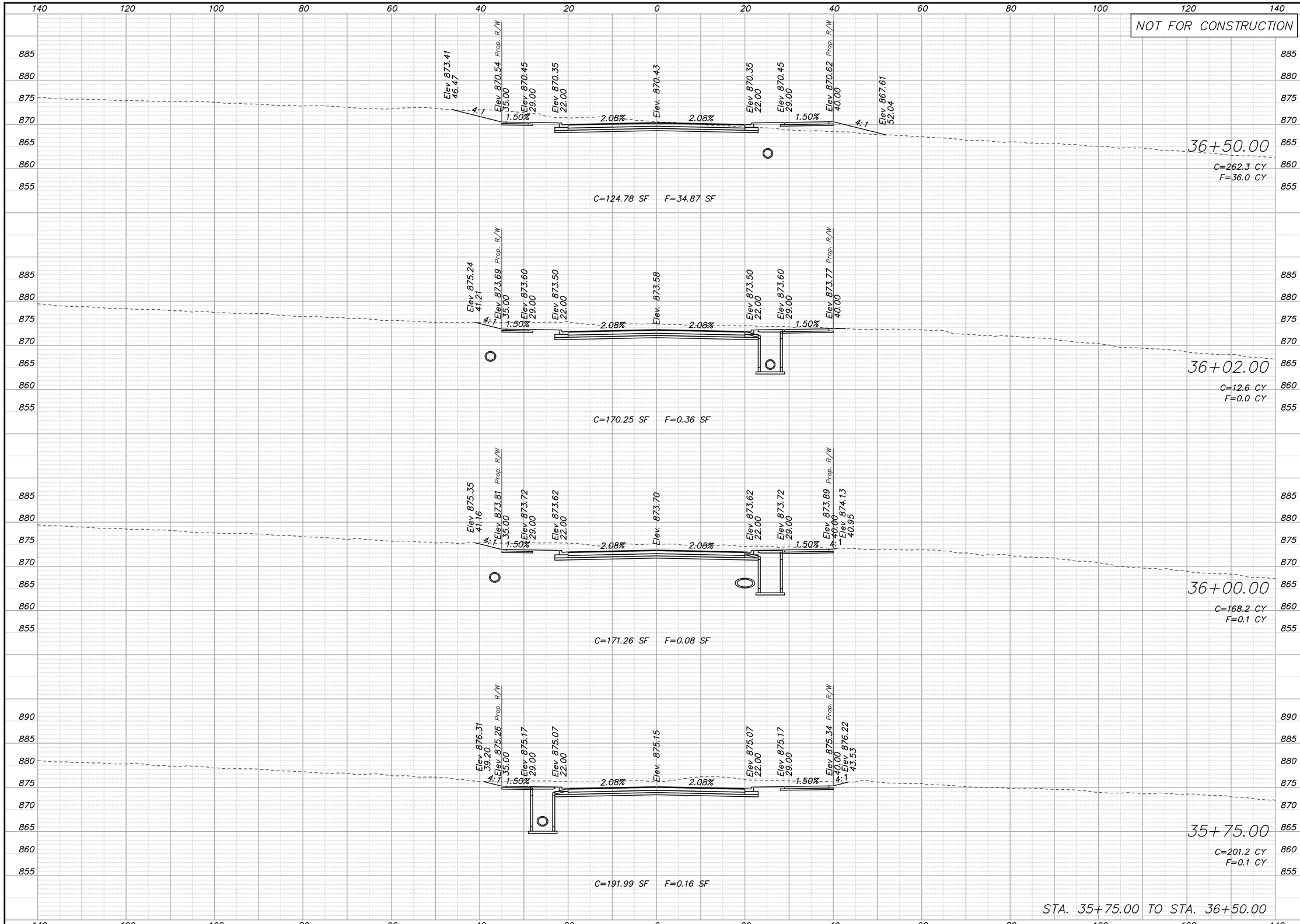

REV.	DATE	REVISIONS	BY	APP'D
5				
4				
3				
2				
1				

Designed By: PRP
Drawn By: JCK/JAA
Checked By: HDL
Issue Date: SEPT. 2016

COPYRIGHT © -2016-SHAFER, KLINE & WARREN INC.

SHAFER, KLINE & WARREN
11250 Corporate Avenue
Lenexa, KS 66219-1392
913.888.7800 FAX: 913.888.7868
SURVEYING | ENGINEERING | CONSTRUCTION

CLEAR CREEK PARKWAY
CITY OF SHAWNEE, KANSAS

CLEAR CREEK PARKWAY
CROSS SECTIONS

150561-010

SHEET NO.
154 OF 182

LAYOUT: MODEL | BY: jadams | DATE: 20-SEP-2016 10:37:30 AM
L:\150561-010_Cad\Civil\Cross Sections Main Line\150561-010_XS-Clear-Creek-Sheets.dgn

NOT FOR CONSTRUCTION

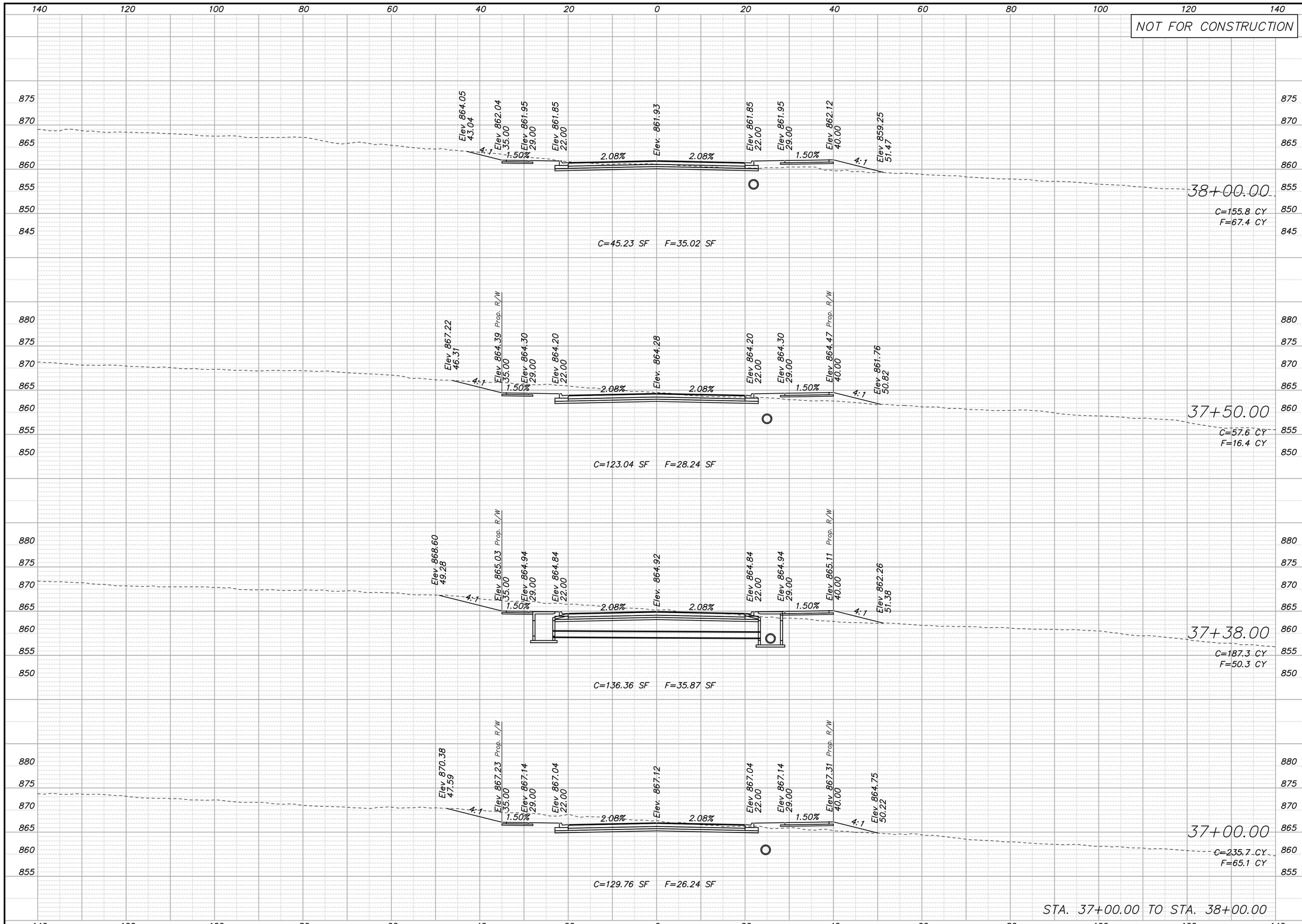

REV.	DATE	REVISIONS	BY	APP'D
5				
4				
3				
2				
1				

Designed By: PRP
Drawn By: JCK/JAA
Checked By: HDL
Issue Date: SEPT. 2016

COPYRIGHT © -2016-SHAFER, KLINE & WARREN INC.

SHAFER, KLINE & WARREN
11250 Corporate Avenue
Lenexa, KS 66219-1392
913.888.7800 FAX: 913.888.7868
SURVEYING | ENGINEERING | CONSTRUCTION

CLEAR CREEK PARKWAY
CITY OF SHAWNEE, KANSAS

CLEAR CREEK PARKWAY
CROSS SECTIONS

150561-010

SHEET NO.
155 OF 182

LAYOUT: MODEL | BY: jadams | DATE: 20-SEP-2016 10:37:31 AM
L:\150561-010_Cad\Civil\Cross Sections Main Line\150561-010_XS-Clear-Creek-Sheets.dgn

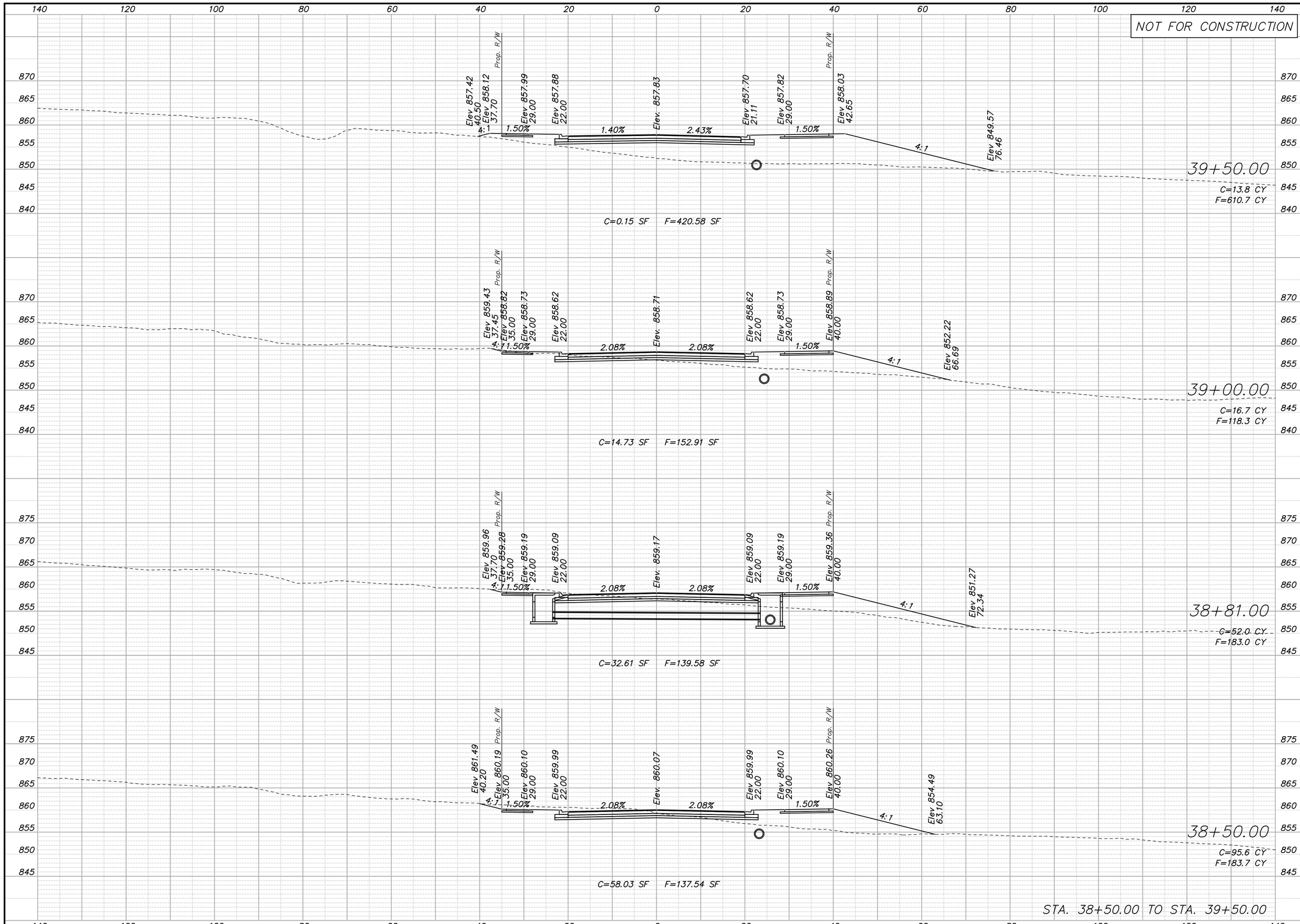

REV.	DATE	REVISIONS	BY	APP'D
5				
4				
3				
2				
1				

Designed By: PRP
Drawn By: JCK/JAA
Checked By: HDL
Issue Date: SEPT. 2016

COPYRIGHT © -2016-SHAFER, KLINE & WARREN INC.

SHAFER, KLINE & WARREN
11250 Corporate Avenue
Lenexa, KS 66219-1392
913.888.7800 FAX: 913.888.7868
SURVEYING | ENGINEERING | CONSTRUCTION

CLEAR CREEK PARKWAY
CITY OF SHAWNEE, KANSAS

CLEAR CREEK PARKWAY
CROSS SECTIONS

150561-010

SHEET NO.
156 OF 182

LAYOUT: MODEL | BY: jadams | DATE: 20-SEP-2016 10:37:32 AM
L:\150561-010_Cad\Civil\Cross Sections Main Line\150561-010_XS-Clear-Creek-Sheets.dgn

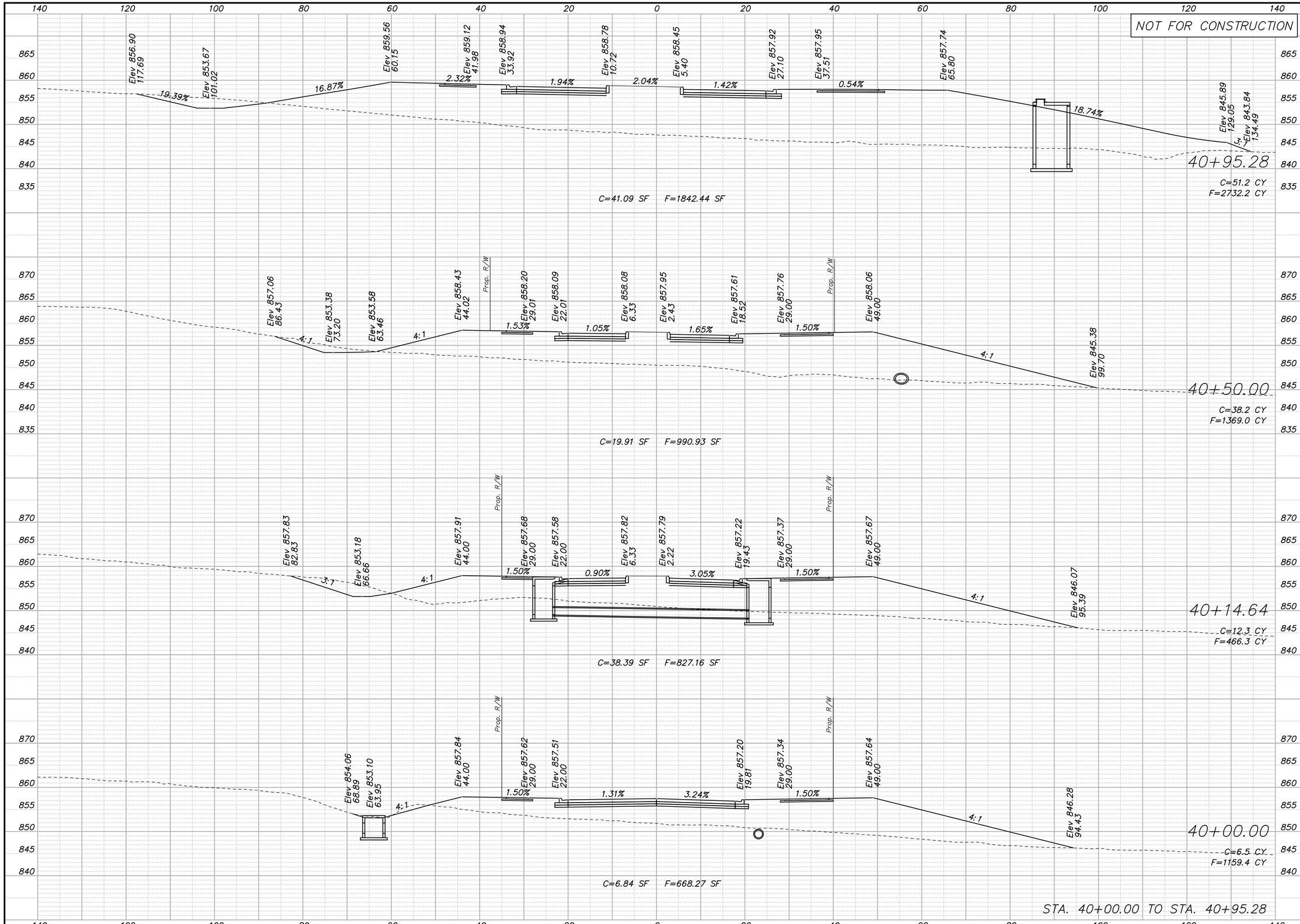

REV.	DATE	REVISIONS	BY	APP'D
5				
4				
3				
2				
1				

Designed By: PRP
Drawn By: JCK/JAA
Checked By: HDL
Issue Date: SEPT. 2016

COPYRIGHT © -2016-SHAFER, KLINE & WARREN INC.

SHAFER, KLINE & WARREN
11250 Corporate Avenue
Lenexa, KS 66219-1392
913.888.7800 FAX: 913.888.7868
SURVEYING | ENGINEERING | CONSTRUCTION

CLEAR CREEK PARKWAY
CITY OF SHAWNEE, KANSAS

CLEAR CREEK PARKWAY
CROSS SECTIONS

150561-010

SHEET NO.
157 OF 182

LAYOUT: MODEL | BY: jadams | DATE: 20-SEP-2016 10:37:34 AM
L:\150561-010_Cad\Civil\Cross Sections Main Line\150561-010_XS-Clear-Creek-Sheets.dgn

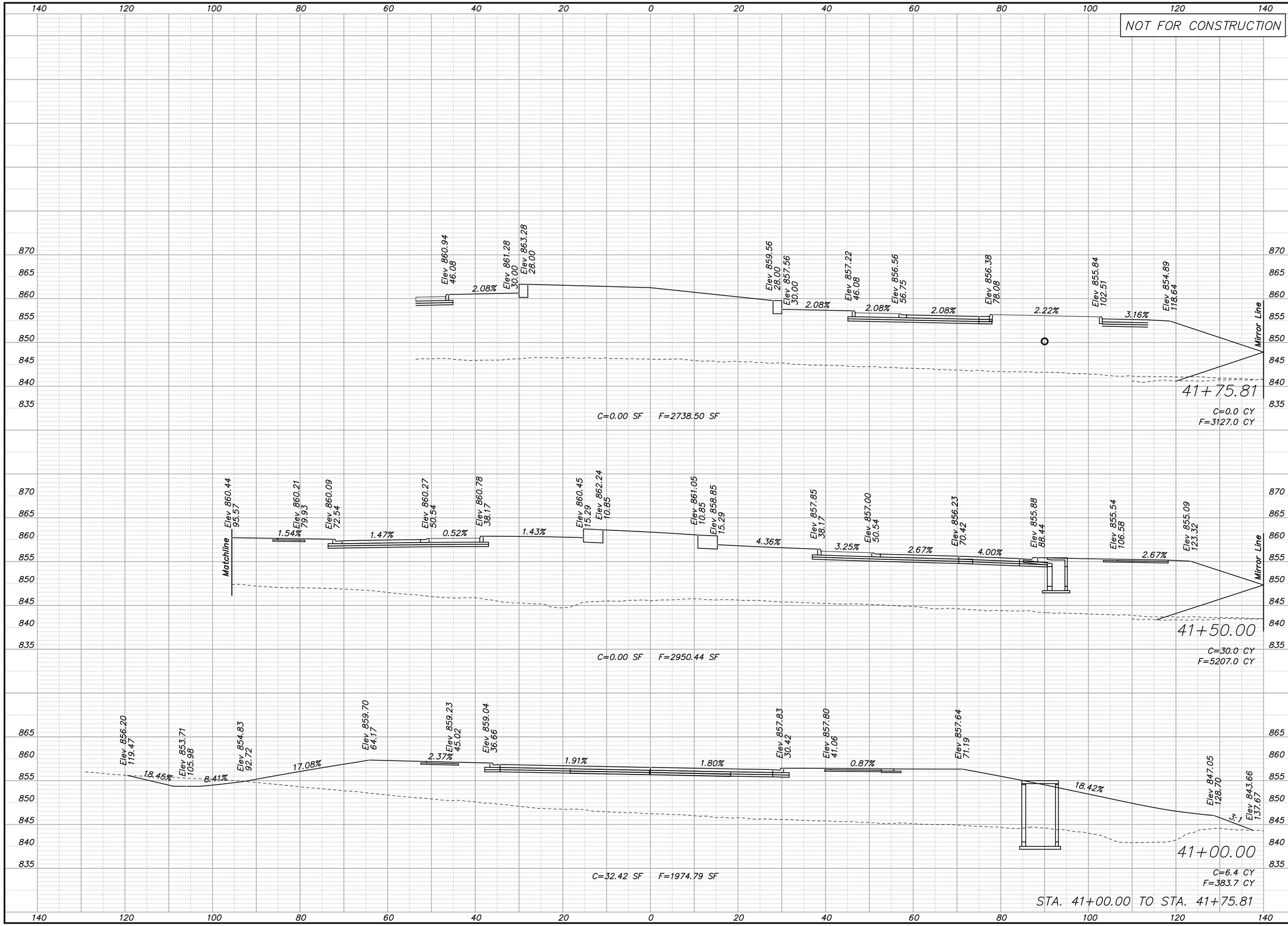

REV.	DATE	REVISIONS	BY	APP'D
5				
4				
3				
2				
1				

COPYRIGHT © -2016-SHAFER, KLINE & WARREN INC.

Designed By: PRP
Drawn By: JCK/JAA
Checked By: HDL
Issue Date: SEPT. 2016

SHAFER, KLINE & WARREN
11250 Corporate Avenue
Lenexa, KS 66219-1392
913.888.7800 FAX: 913.888.7868
SURVEYING | ENGINEERING | CONSTRUCTION

CLEAR CREEK PARKWAY
CITY OF SHAWNEE, KANSAS

CLEAR CREEK PARKWAY
CROSS SECTIONS

150561-010

LAYOUT: MODEL | BY: jadams | DATE: 20-SEP-2016 10:37:35 AM
L:\150561-010_Cad\Civil\Cross Sections Main Line\150561-010_XS-Clear-Creek-Sheets.dgn

NOT FOR CONSTRUCTION

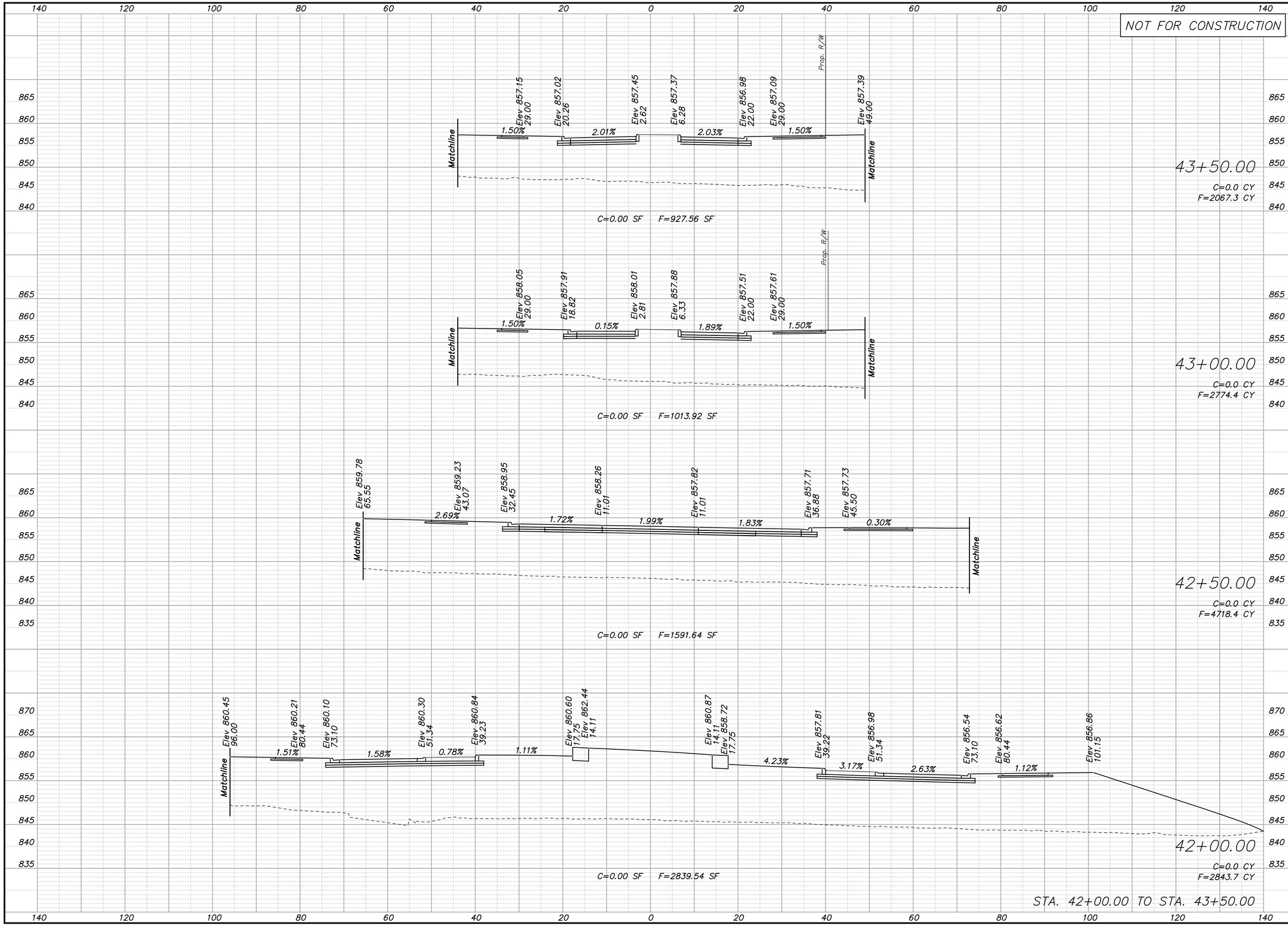

REV.	DATE	REVISIONS	BY	APP'D
5				
4				
3				
2				
1				

Designed By: PRP
Drawn By: JCK/JAA
Checked By: HDL
Issue Date: SEPT. 2016

COPYRIGHT © -2016-SHAFER, KLINE & WARREN INC.

SHAFER, KLINE & WARREN
11250 Corporate Avenue
Lenexa, KS 66219-1392
913.888.7800 FAX: 913.888.7868
SURVEYING | ENGINEERING | CONSTRUCTION

CLEAR CREEK PARKWAY
CITY OF SHAWNEE, KANSAS

CLEAR CREEK PARKWAY
CROSS SECTIONS

150561-010

SHEET NO.
159 OF 182

LAYOUT: MODEL | BY: jadams | DATE: 20-SEP-2016 10:37:36 AM
L:\150561-010_Cad\Civil\Cross Sections Main Line\150561-010_XS-Clear-Creek-Sheets.dgn

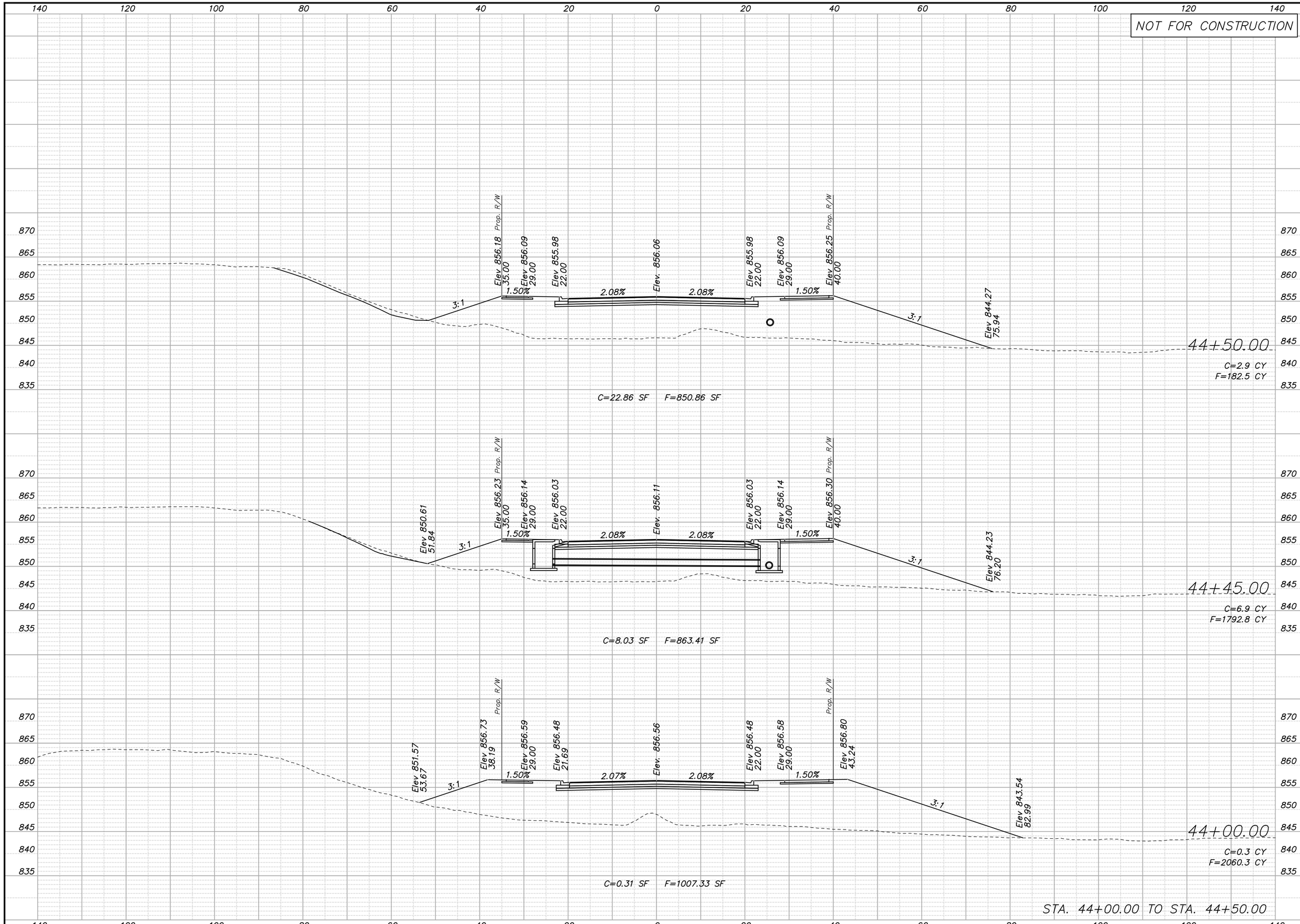

REV.	DATE	REVISIONS	BY	APP'D
5				
4				
3				
2				
1				

COPYRIGHT © -2016-SHAFER, KLINE & WARREN INC.

Designed By: PRP
Drawn By: JCK/JAA
Checked By: HDL
Issue Date: SEPT. 2016

SHAFER, KLINE & WARREN
11250 Corporate Avenue
Lenexa, KS 66219-1392
913.888.7800 FAX: 913.888.7868
SURVEYING | ENGINEERING | CONSTRUCTION

CLEAR CREEK PARKWAY
CITY OF SHAWNEE, KANSAS

CLEAR CREEK PARKWAY
CROSS SECTIONS

150561-010

SHEET NO.
160 OF 182

LAYOUT: MODEL | BY: jadams | DATE: 20-SEP-2016 10:37:37 AM
L:\150561-010_Cad\Civil\Cross Sections Main Line\150561-010_XS-Clear-Creek-Sheets.dgn

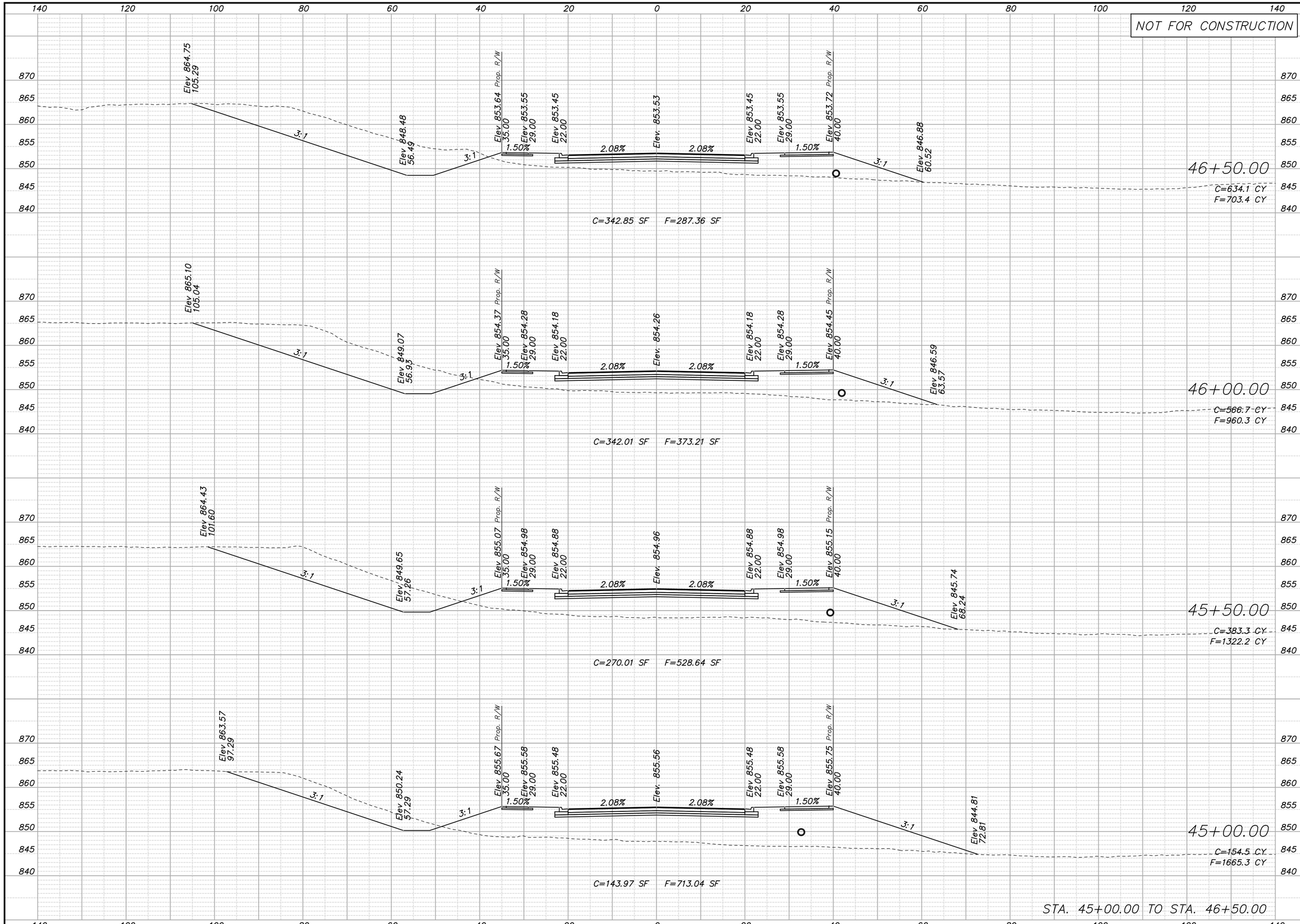

REV.	DATE	REVISIONS	BY	APP'D
5				
4				
3				
2				
1				

Designed By: PRP
Drawn By: JCK/JAA
Checked By: HDL
Issue Date: SEPT. 2016

COPYRIGHT © -2016-SHAFER, KLINE & WARREN INC.

SHAFER, KLINE & WARREN
11250 Corporate Avenue
Lenexa, KS 66219-1392
913.888.7800 FAX: 913.888.7868
SURVEYING | ENGINEERING | CONSTRUCTION

CLEAR CREEK PARKWAY
CITY OF SHAWNEE, KANSAS

CLEAR CREEK PARKWAY
CROSS SECTIONS

150561-010

SHEET NO.
161 OF 182

LAYOUT: MODEL | BY: jadams | DATE: 20-SEP-2016 10:37:38 AM
L:\150561-010_Cad\Civil\Cross Sections Main Line\150561-010_XS-Clear-Creek-Sheets.dgn

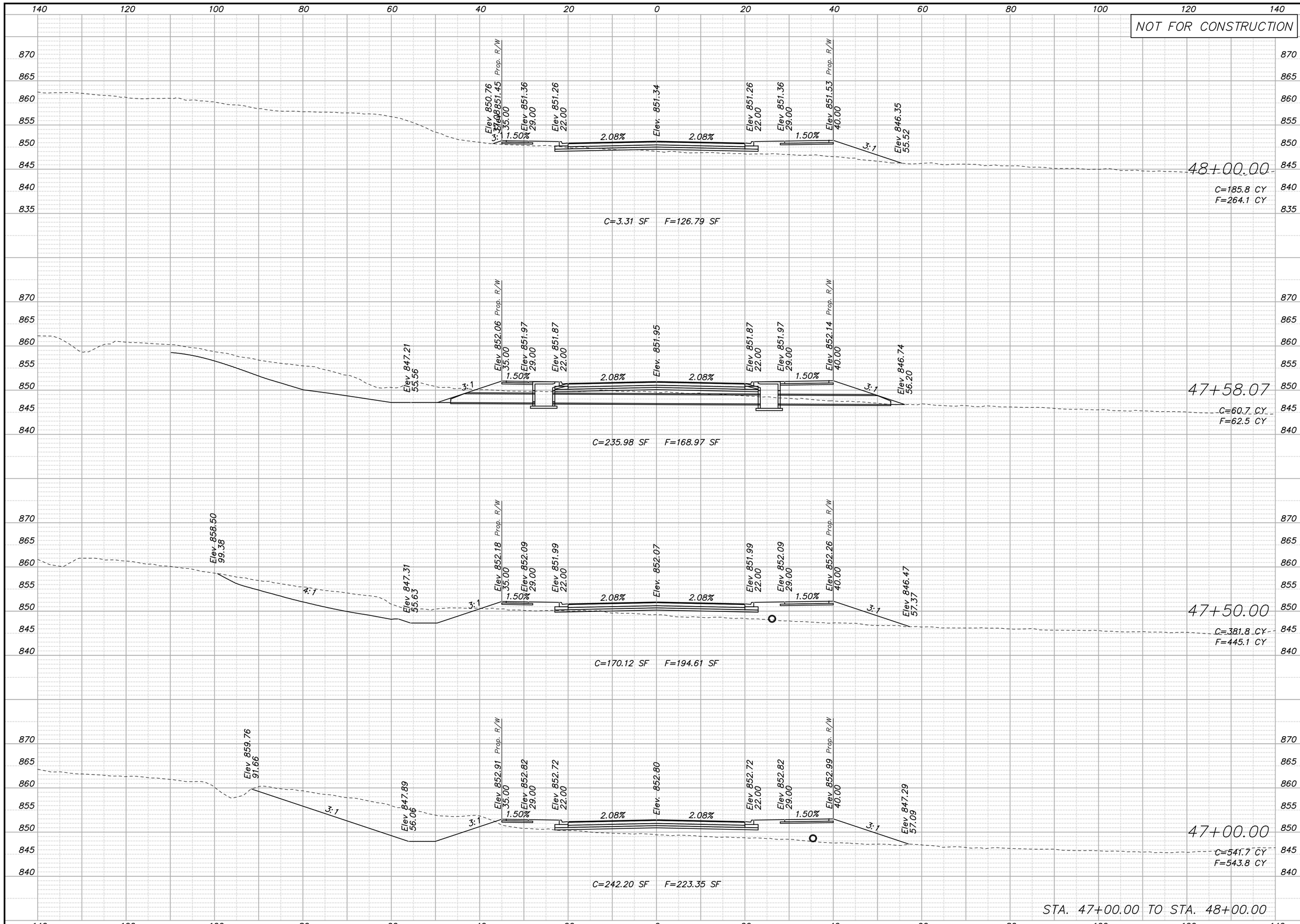

REV.	DATE	REVISIONS	BY	APP'D
5				
4				
3				
2				
1				

Designed By: PRP
Drawn By: JCK/JAA
Checked By: HDL
Issue Date: SEPT. 2016

COPYRIGHT © -2016-SHAFER, KLINE & WARREN INC.

SHAFER, KLINE & WARREN
11250 Corporate Avenue
Lenexa, KS 66219-1392
913.888.7800 FAX: 913.888.7868
SURVEYING | ENGINEERING | CONSTRUCTION

CLEAR CREEK PARKWAY
CITY OF SHAWNEE, KANSAS

CLEAR CREEK PARKWAY
CROSS SECTIONS

150561-010

SHEET NO.
162 OF 182

LAYOUT: MODEL | BY: jadams | DATE: 20-SEP-2016 10:37:39 AM
L:\150561-010_Cad\Civil\Cross Sections Main Line\150561-010_XS-Clear-Creek-Sheets.dgn

REV.	DATE	REVISIONS	BY	APP'D
5				
4				
3				
2				
1				

COPYRIGHT © -2016-SHAFER, KLINE & WARREN INC.

Designed By: PRP
Drawn By: JCK/JAA
Checked By: HDL
Issue Date: SEPT. 2016

SHAFER, KLINE & WARREN
11250 Corporate Avenue
Lenexa, KS 66219-1392
913.888.7800 FAX: 913.888.7868
SURVEYING | ENGINEERING | CONSTRUCTION

CLEAR CREEK PARKWAY
CITY OF SHAWNEE, KANSAS

CLEAR CREEK PARKWAY
CROSS SECTIONS

150561-010

SHEET NO.
163 OF 182

LAYOUT: MODEL | BY: jadams | DATE: 20-SEP-2016 10:37:40 AM
L:\150561-010_Cad\Civil\Cross Sections Main Line\150561-010_XS-Clear-Creek-Sheets.dgn

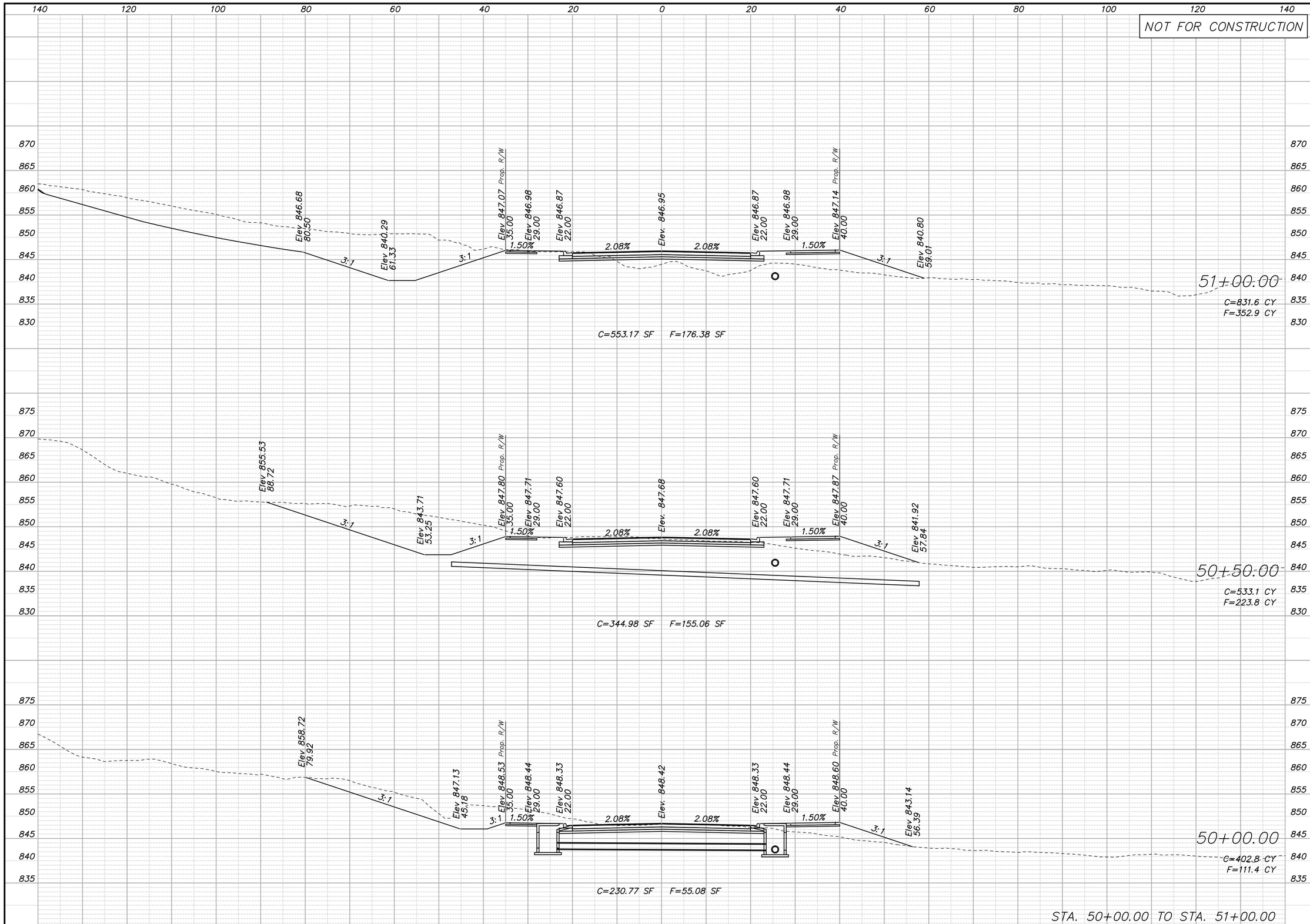

REV.	DATE	REVISIONS	BY	APP'D
1				
2				
3				
4				
5				

Designed By: PRP
Drawn By: JCK/JAA
Checked By: HDL
Issue Date: SEPT. 2016

COPYRIGHT © -2016-SHAFER, KLINE & WARREN INC.

SHAFER, KLINE & WARREN
11250 Corporate Avenue
Lenexa, KS 66219-1392
913.888.7800 FAX: 913.888.7868
SURVEYING | ENGINEERING | CONSTRUCTION

CLEAR CREEK PARKWAY
CITY OF SHAWNEE, KANSAS

CLEAR CREEK PARKWAY
CROSS SECTIONS

150561-010

SHEET NO.
164 OF 182

LAYOUT: MODEL | BY: jadams | DATE: 20-SEP-2016 10:37:42 AM
L:\150561-010_Cad\Civil\Cross Sections Main Line\150561-010_XS-Clear-Creek-Sheets.dgn

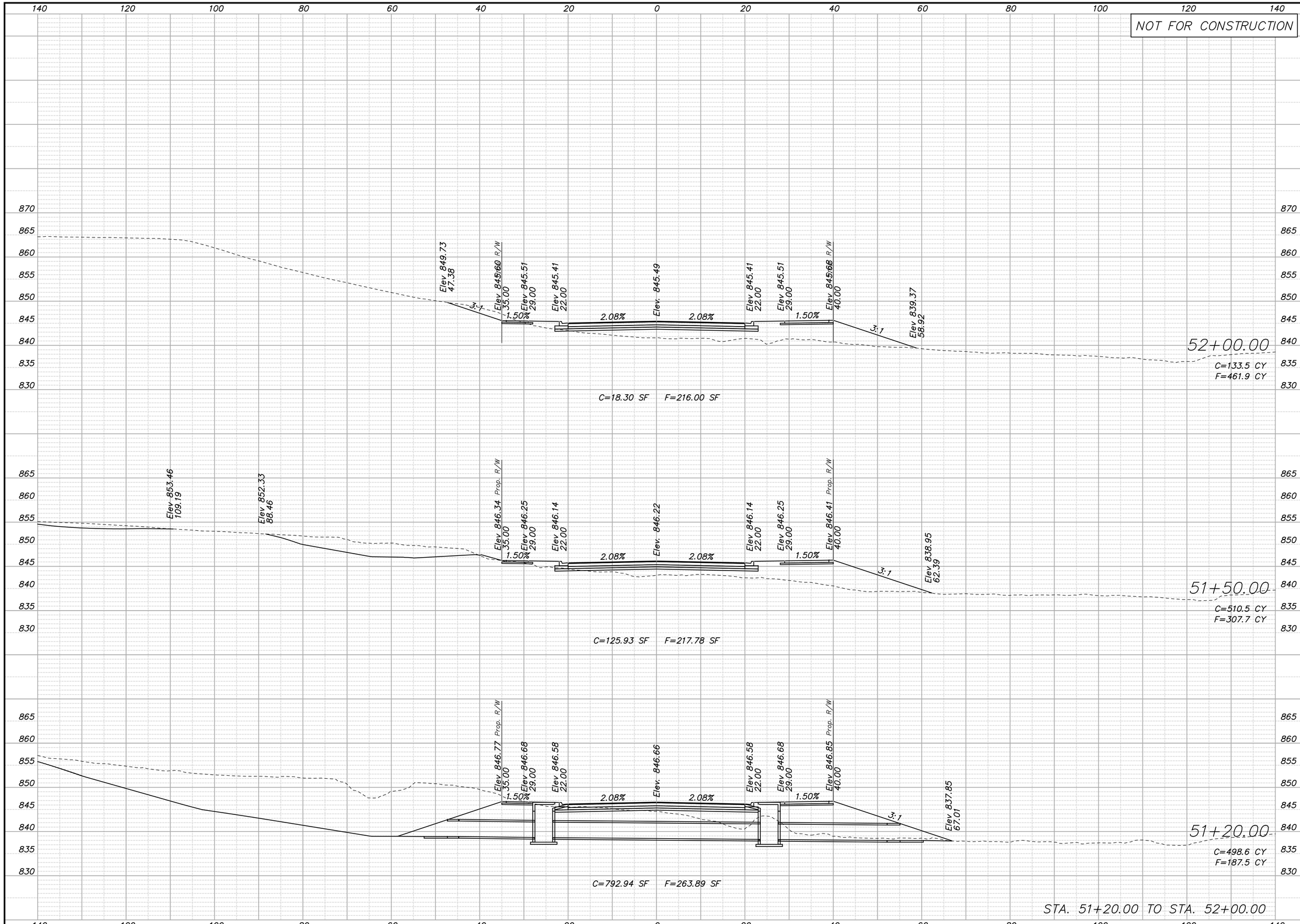

REV.	DATE	REVISIONS	BY	APP'D
5				
4				
3				
2				
1				

COPYRIGHT © -2016-SHAFER, KLINE & WARREN INC.

Designed By: PRP
Drawn By: JCK/JAA
Checked By: HDL
Issue Date: SEPT. 2016

SHAFER, KLINE & WARREN
11250 Corporate Avenue
Lenexa, KS 66219-1392
913.888.7800 FAX: 913.888.7868
SURVEYING | ENGINEERING | CONSTRUCTION

CLEAR CREEK PARKWAY
CITY OF SHAWNEE, KANSAS

CLEAR CREEK PARKWAY
CROSS SECTIONS

150561-010

SHEET NO.
165 OF 182

LAYOUT: MODEL | BY: jadams | DATE: 20-SEP-2016 10:37:43 AM
L:\150561-010_Cad\Civil\Cross Sections Main Line\150561-010_XS-Clear-Creek-Sheets.dgn

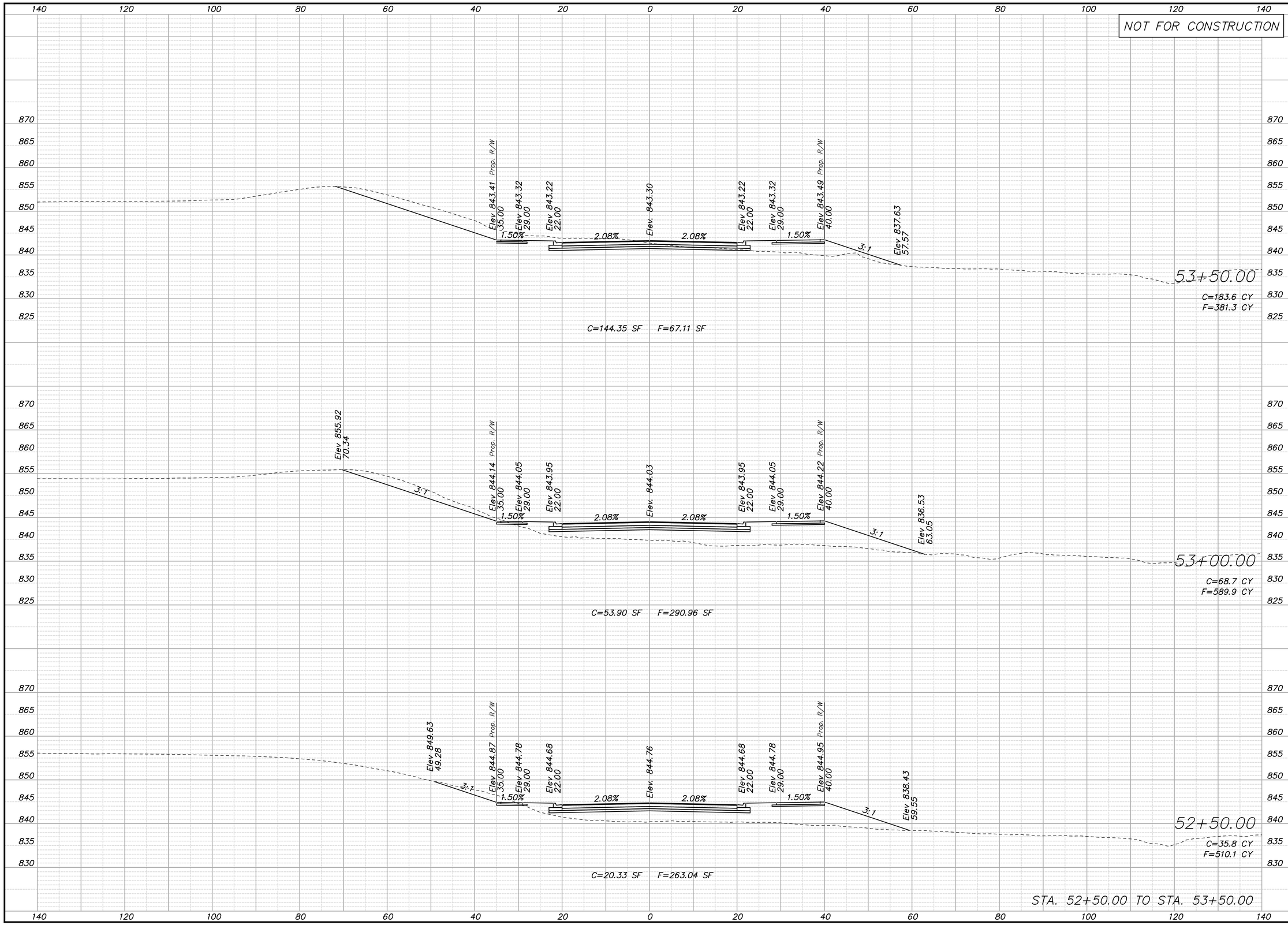

REV.	DATE	REVISIONS	BY	APP'D
5				
4				
3				
2				
1				

COPYRIGHT © -2016-SHAFER, KLINE & WARREN INC.

Designed By: PRP
Drawn By: JCK/JAA
Checked By: HDL
Issue Date: SEPT. 2016

SHAFER, KLINE & WARREN
11250 Corporate Avenue
Lenexa, KS 66219-1392
913.888.7800 FAX: 913.888.7868
SURVEYING | ENGINEERING | CONSTRUCTION

CLEAR CREEK PARKWAY
CITY OF SHAWNEE, KANSAS

CLEAR CREEK PARKWAY
CROSS SECTIONS

150561-010

SHEET NO.
166 OF 182

LAYOUT: MODEL | BY: jaddams | DATE: 20-SEP-2016 10:37:44 AM
L:\150561-010_Cad\Civil\Cross Sections Main Line\150561-010_XS-Clear-Creek-Sheets.dgn

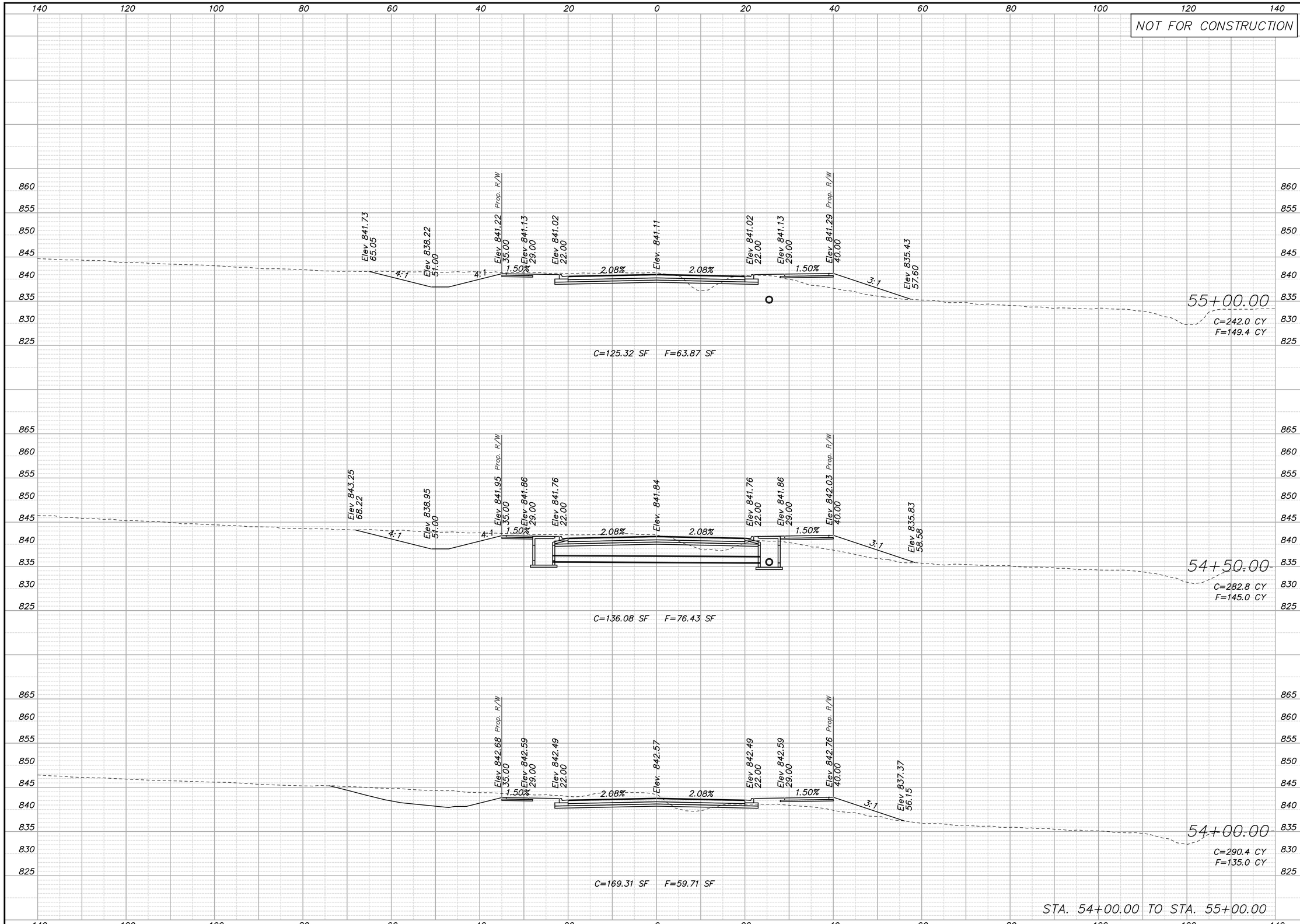

REV.	DATE	REVISIONS	BY	APP'D
5				
4				
3				
2				
1				

COPYRIGHT © -2016-SHAFER, KLINE & WARREN INC.

Designed By: PRP
Drawn By: JCK/JAA
Checked By: HDL
Issue Date: SEPT. 2016

SHAFER, KLINE & WARREN
11250 Corporate Avenue
Lenexa, KS 66219-1392
913.888.7800 FAX: 913.888.7868
SURVEYING | ENGINEERING | CONSTRUCTION

CLEAR CREEK PARKWAY
CITY OF SHAWNEE, KANSAS

CLEAR CREEK PARKWAY
CROSS SECTIONS

150561-010

SHEET NO.
167 OF 182

LAYOUT: MODEL | BY: jadams | DATE: 20-SEP-2016 10:37:45 AM
L:\150561-010_Cad\Civil\Cross Sections Main Line\150561-010_XS-Clear-Creek-Sheets.dgn

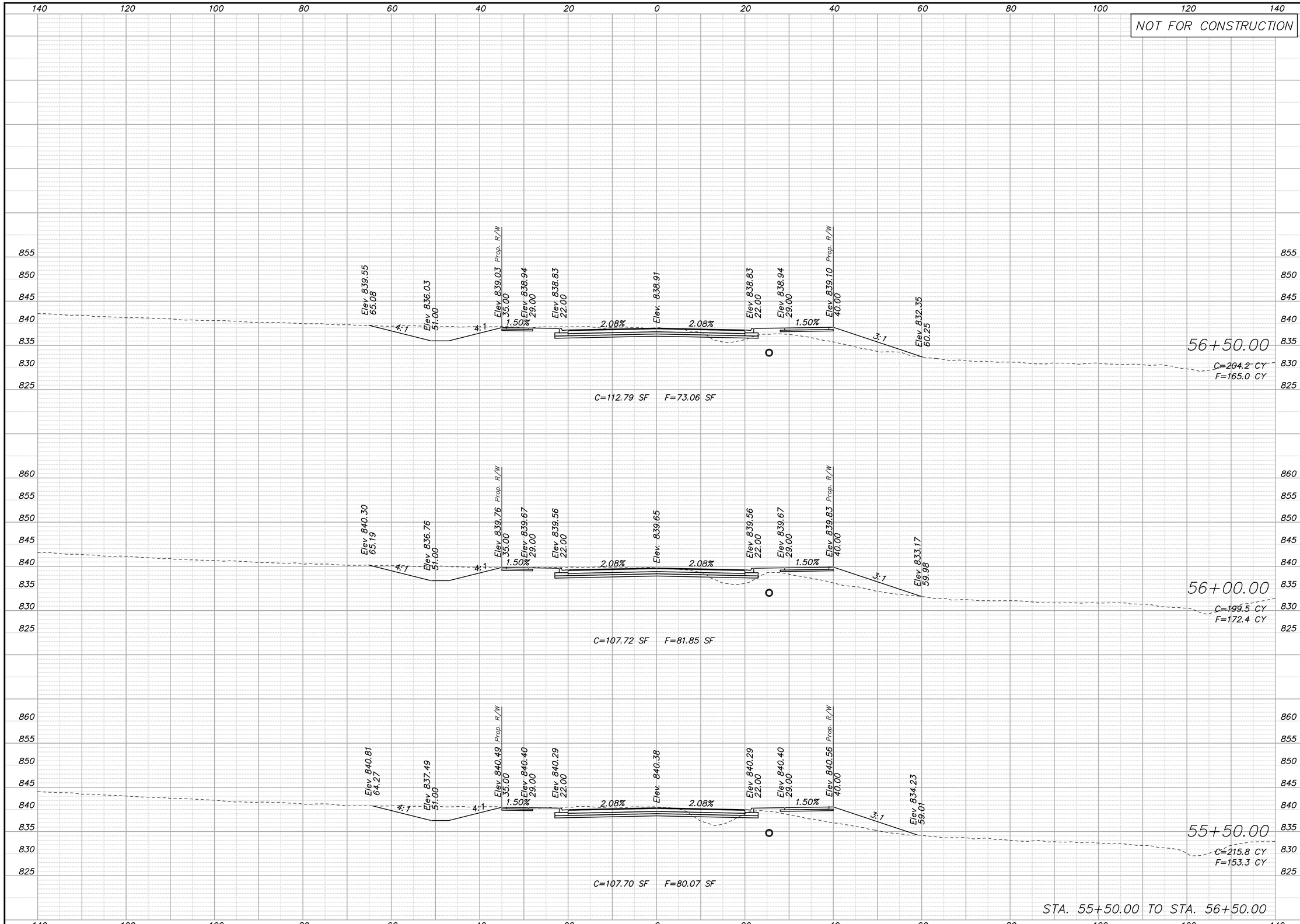

REV.	DATE	REVISIONS	BY	APP'D
5				
4				
3				
2				
1				

Designed By: PRP
Drawn By: JCK/JAA
Checked By: HDL
Issue Date: SEPT. 2016

COPYRIGHT © -2016-SHAFER, KLINE & WARREN INC.

SHAFER, KLINE & WARREN
11250 Corporate Avenue
Lenexa, KS 66219-1392
913.888.7800 FAX: 913.888.7868
SURVEYING | ENGINEERING | CONSTRUCTION

CLEAR CREEK PARKWAY
CITY OF SHAWNEE, KANSAS

CLEAR CREEK PARKWAY
CROSS SECTIONS

150561-010

SHEET NO.
168 OF 182

LAYOUT: MODEL | BY: jadams | DATE: 20-SEP-2016 10:37:46 AM
L:\150561-010_Cad\Civil\Cross Sections Main Line\150561-010_XS-Clear-Creek-Sheets.dgn

NOT FOR CONSTRUCTION

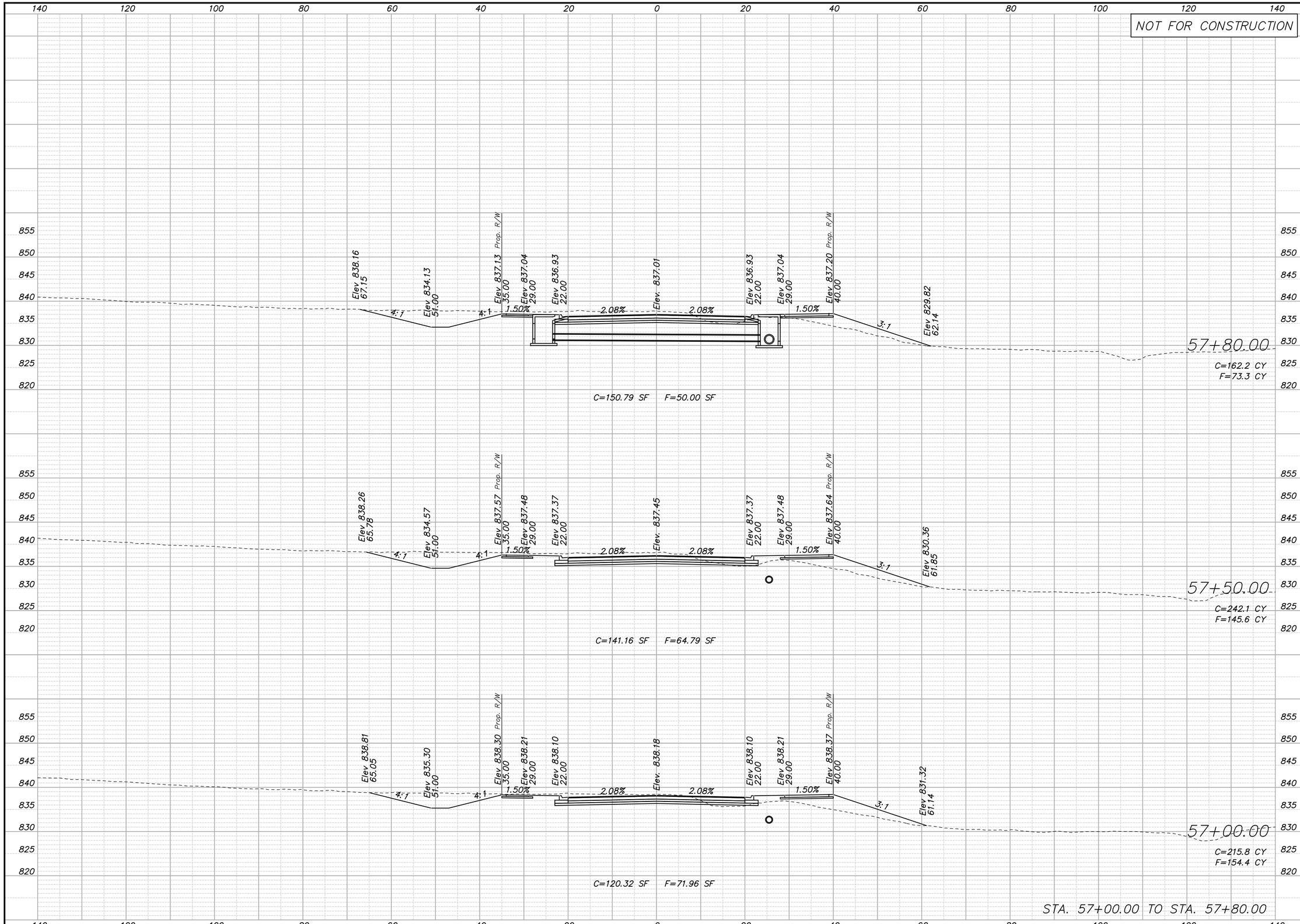

STA. 57+00.00 TO STA. 57+80.00

REV.	DATE	REVISIONS	BY	APP'D
1				
2				
3				
4				
5				

Designed By: PRP
Drawn By: JCK/JAA
Checked By: HDL
Issue Date: SEPT. 2016

COPYRIGHT © -2016-SHAFER, KLINE & WARREN INC.

SHAFER, KLINE & WARREN
11250 Corporate Avenue
Lenexa, KS 66219-1392
913.888.7800 FAX: 913.888.7868
SURVEYING | ENGINEERING | CONSTRUCTION

CLEAR CREEK PARKWAY
CITY OF SHAWNEE, KANSAS

CLEAR CREEK PARKWAY
CROSS SECTIONS

150561-010

SHEET NO.
169 OF 182

LAYOUT: MODEL | BY: jaddams | DATE: 20-SEP-2016 10:37:47 AM
L:\150561-010_Cad\Civil\Cross Sections Main Line\150561-010_XS-Clear-Creek-Sheets.dgn

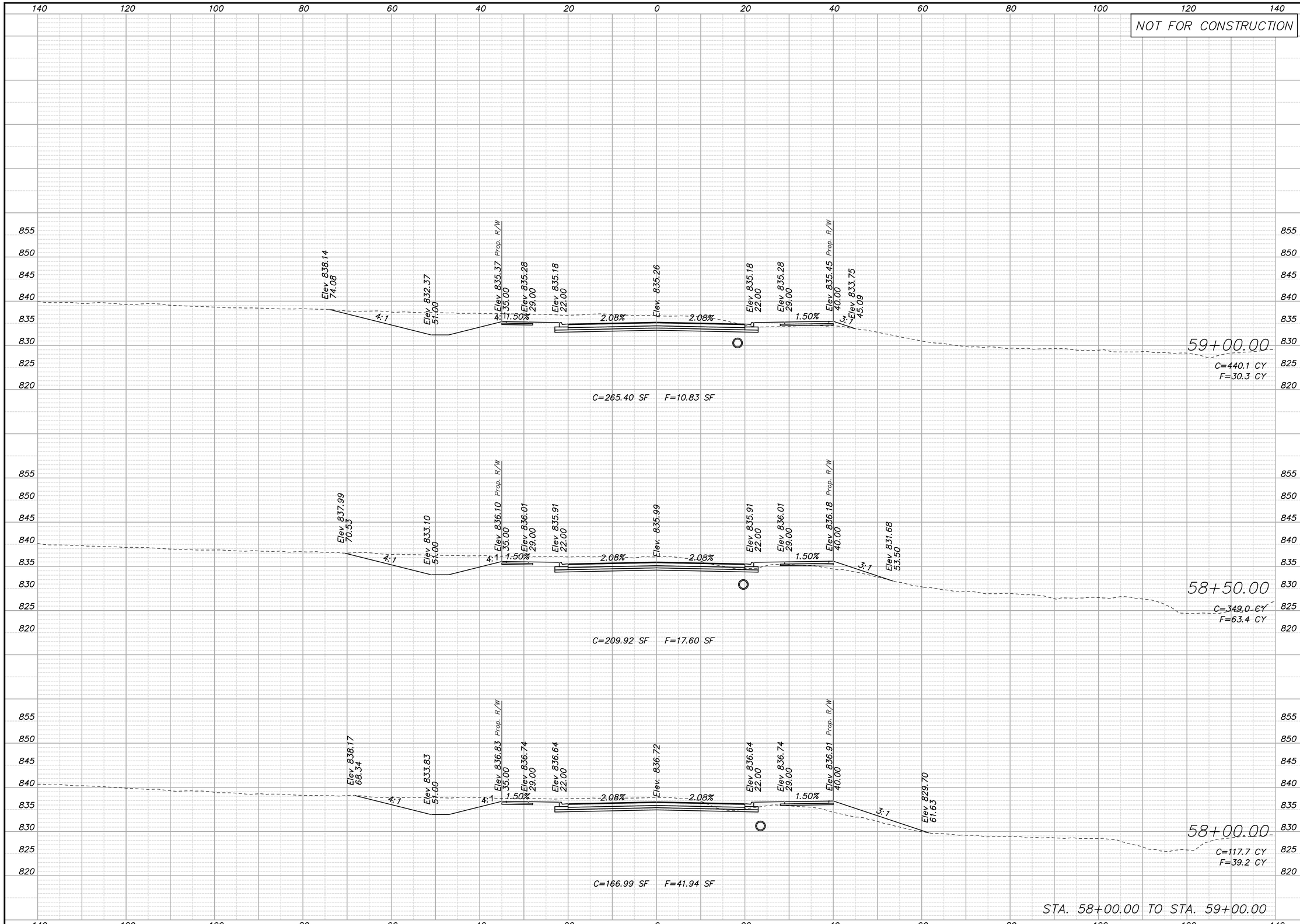

REV.	DATE	REVISIONS	BY	APP'D
5				
4				
3				
2				
1				

COPYRIGHT © -2016-SHAFER, KLINE & WARREN INC.

Designed By: PRP
Drawn By: JCK/JAA
Checked By: HDL
Issue Date: SEPT. 2016

SHAFER, KLINE & WARREN
11250 Corporate Avenue
Lenexa, KS 66219-1392
913.888.7800 FAX: 913.888.7868
SURVEYING | ENGINEERING | CONSTRUCTION

CLEAR CREEK PARKWAY
CITY OF SHAWNEE, KANSAS

CLEAR CREEK PARKWAY
CROSS SECTIONS

150561-010

LAYOUT: MODEL | BY: jadams | DATE: 20-SEP-2016 10:37:48 AM
L:\150561-010_Cad\Civil\Cross Sections Main Line\150561-010_XS-Clear-Creek-Sheets.dgn

NOT FOR CONSTRUCTION

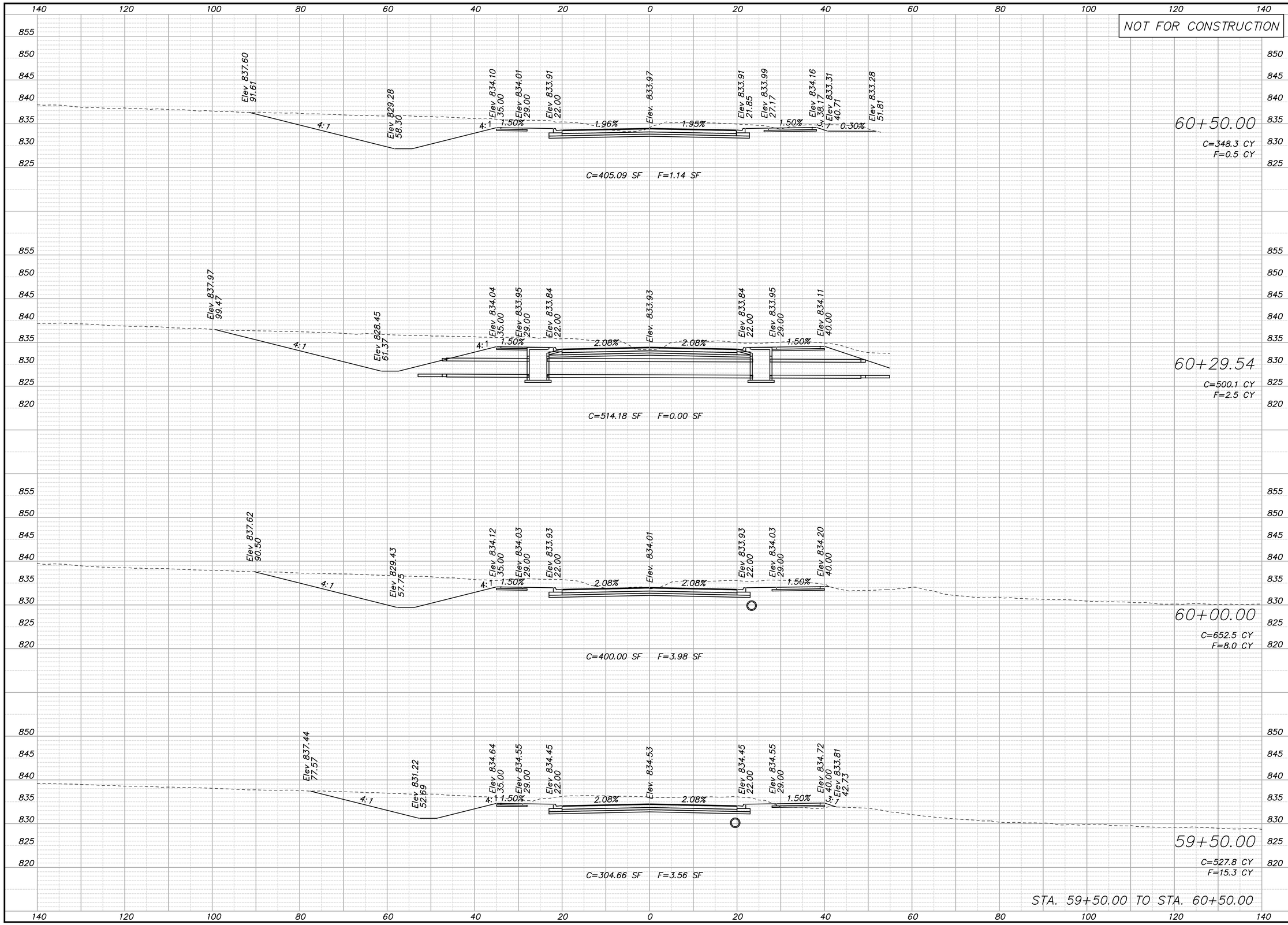

REV.	DATE	REVISIONS	BY	APP'D
1				
2				
3				
4				
5				

COPYRIGHT © -2016-SHAFER, KLINE & WARREN INC.

Designed By: PRP
Drawn By: JCK/JAA
Checked By: HDL
Issue Date: SEPT. 2016

SHAFER, KLINE & WARREN
11250 Corporate Avenue
Lenexa, KS 66219-1392
913.888.7800 FAX: 913.888.7868
SURVEYING | ENGINEERING | CONSTRUCTION

CLEAR CREEK PARKWAY
CITY OF SHAWNEE, KANSAS

CLEAR CREEK PARKWAY
CROSS SECTIONS

150561-010

SHEET NO.
171 OF 182

LAYOUT: MODEL | BY: jadams | DATE: 20-SEP-2016 10:37:49 AM
L:\150561-010_Cad\Civil\Cross Sections Main Line\150561-010_XS-Clear-Creek-Sheets.dgn

REV.	DATE	REVISIONS	BY	APP'D
5				
4				
3				
2				
1				

COPYRIGHT © -2016-SHAFER, KLINE & WARREN INC.

Designed By: PRP
Drawn By: JCK/JAA
Checked By: HDL
Issue Date: SEPT. 2016

SHAFER, KLINE & WARREN
11250 Corporate Avenue
Lenexa, KS 66219-1392
913.888.7800 FAX: 913.888.7868
SURVEYING | ENGINEERING | CONSTRUCTION

CLEAR CREEK PARKWAY
CITY OF SHAWNEE, KANSAS

CLEAR CREEK PARKWAY
CROSS SECTIONS

150561-010

SHEET NO.
172 OF 182

LAYOUT: MODEL | BY: jadams | DATE: 20-SEP-2016 10:37:50 AM
L:\150561-010_Cad\Civil\Cross Sections Main Line\150561-010_XS-Clear-Creek-Sheets.dgn

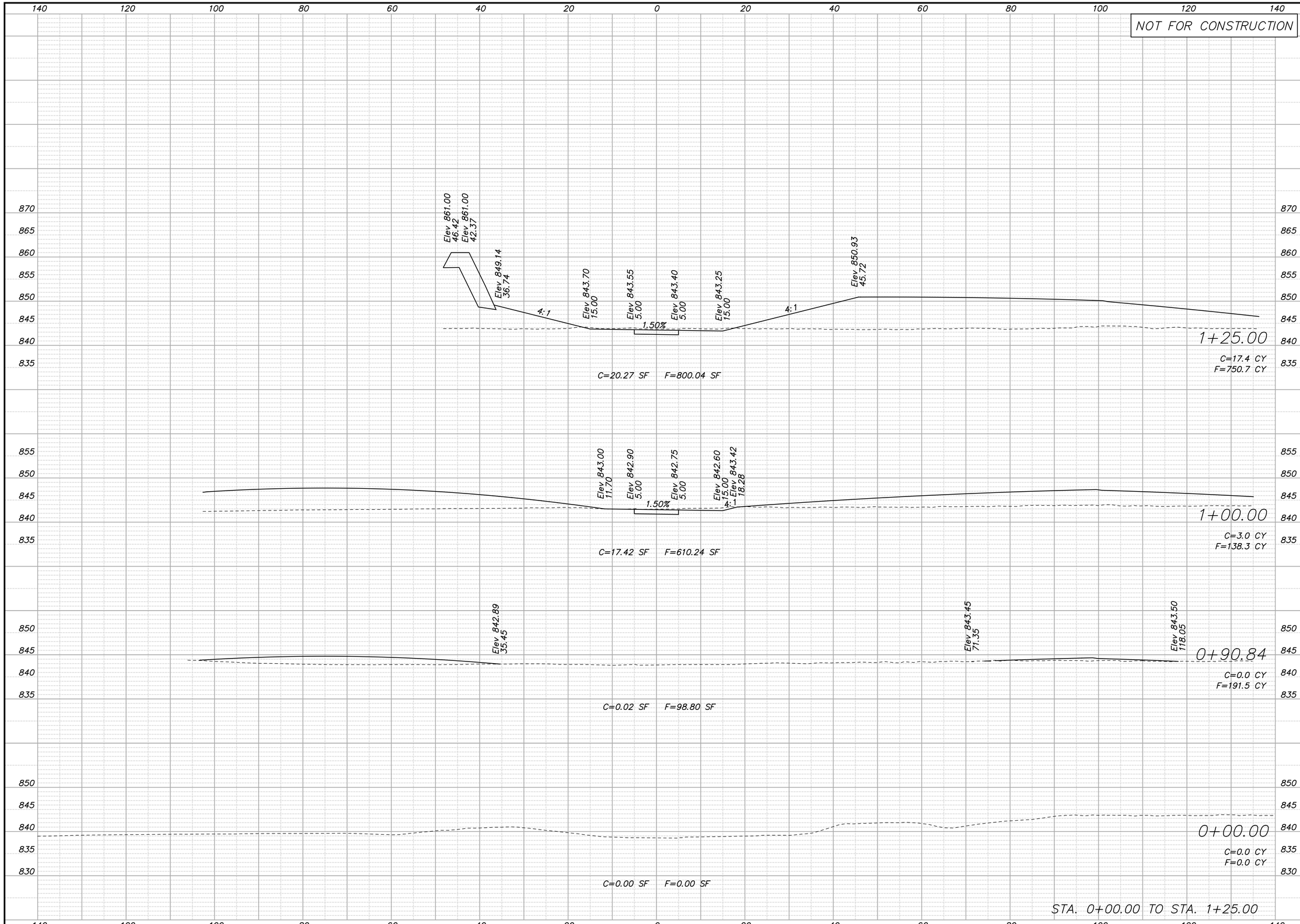

REV.	DATE	REVISIONS	BY	APP'D
5				
4				
3				
2				
1				

COPYRIGHT © -2016-SHAFER, KLINE & WARREN INC.

Designed By: PRP
Drawn By: JCK/JAA
Checked By: HDL
Issue Date: SEPT. 2016

SHAFER, KLINE & WARREN
11250 Corporate Avenue
Lenexa, KS 66219-1392
913.888.7800 FAX: 913.888.7868
SURVEYING | ENGINEERING | CONSTRUCTION

CLEAR CREEK PARKWAY
CITY OF SHAWNEE, KANSAS

CART PATH CROSS SECTIONS (1)

150561-010

SHEET NO.
173 OF 182

LAYOUT: MODEL | BY: jaddams | DATE: 20-SEP-2016 10:37:52 AM
L:\150561-010_Cad\Civil\Cross Sections Side Road 1\150561-010_XS-Cart-Path-Sheets.dgn

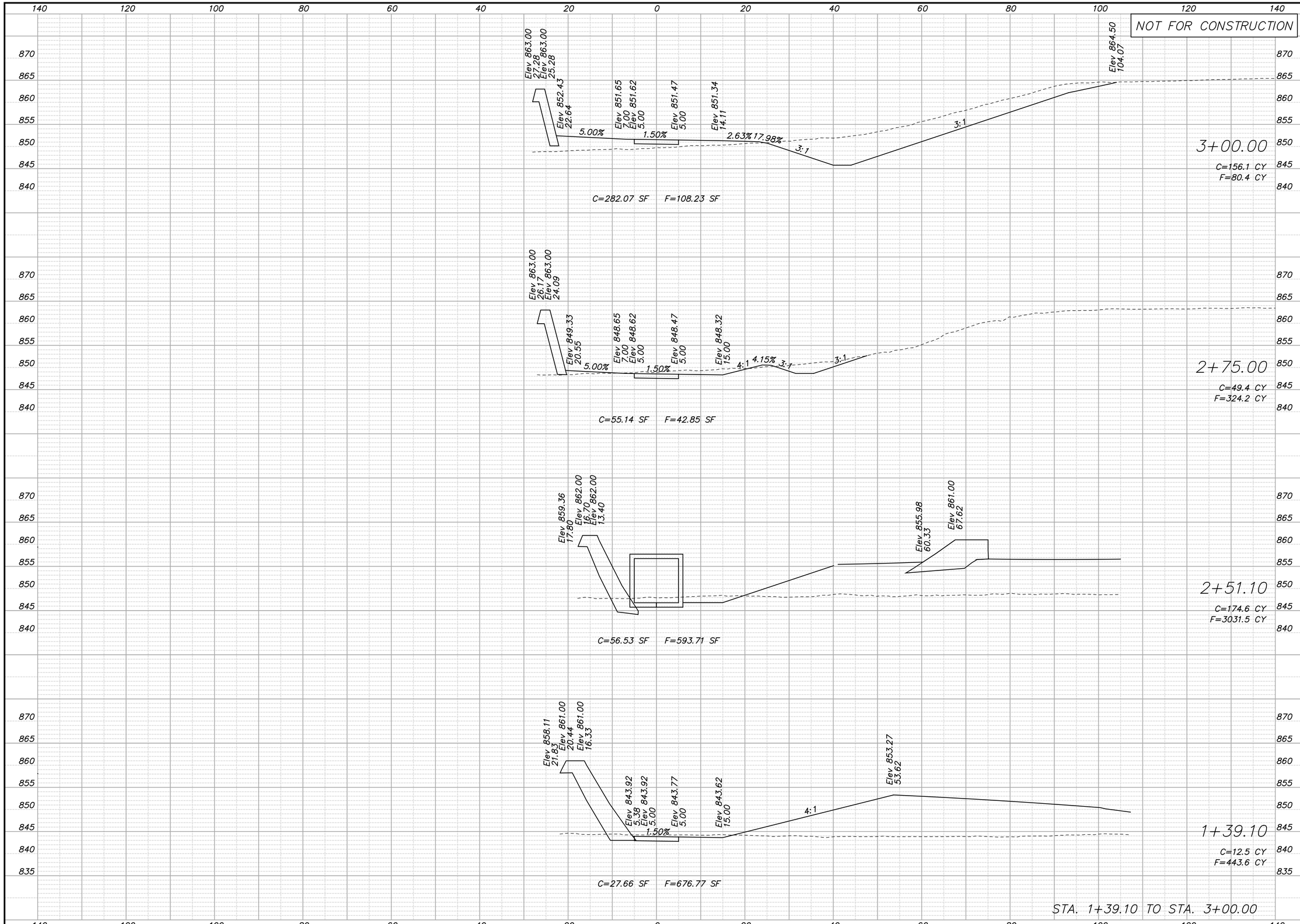

REV.	DATE	REVISIONS	BY	APP'D
5				
4				
3				
2				
1				

COPYRIGHT © -2016-SHAFER, KLINE & WARREN INC.

Designed By: PRP
Drawn By: JCK/JAA
Checked By: HDL
Issue Date: SEPT. 2016

SHAFER, KLINE & WARREN
11250 Corporate Avenue
Lenexa, KS 66219-1392
913.888.7800 FAX: 913.888.7868
SURVEYING | ENGINEERING | CONSTRUCTION

CLEAR CREEK PARKWAY
CITY OF SHAWNEE, KANSAS

CART PATH CROSS SECTIONS (2)

150561-010

SHEET NO.
174 OF 182

LAYOUT: MODEL | BY: jadams | DATE: 20-SEP-2016 10:37:53 AM
L:\150561-010_Cad\Civil\Cross Sections Side Road 1\150561-010_XS-Cart-Path-Sheets.dgn

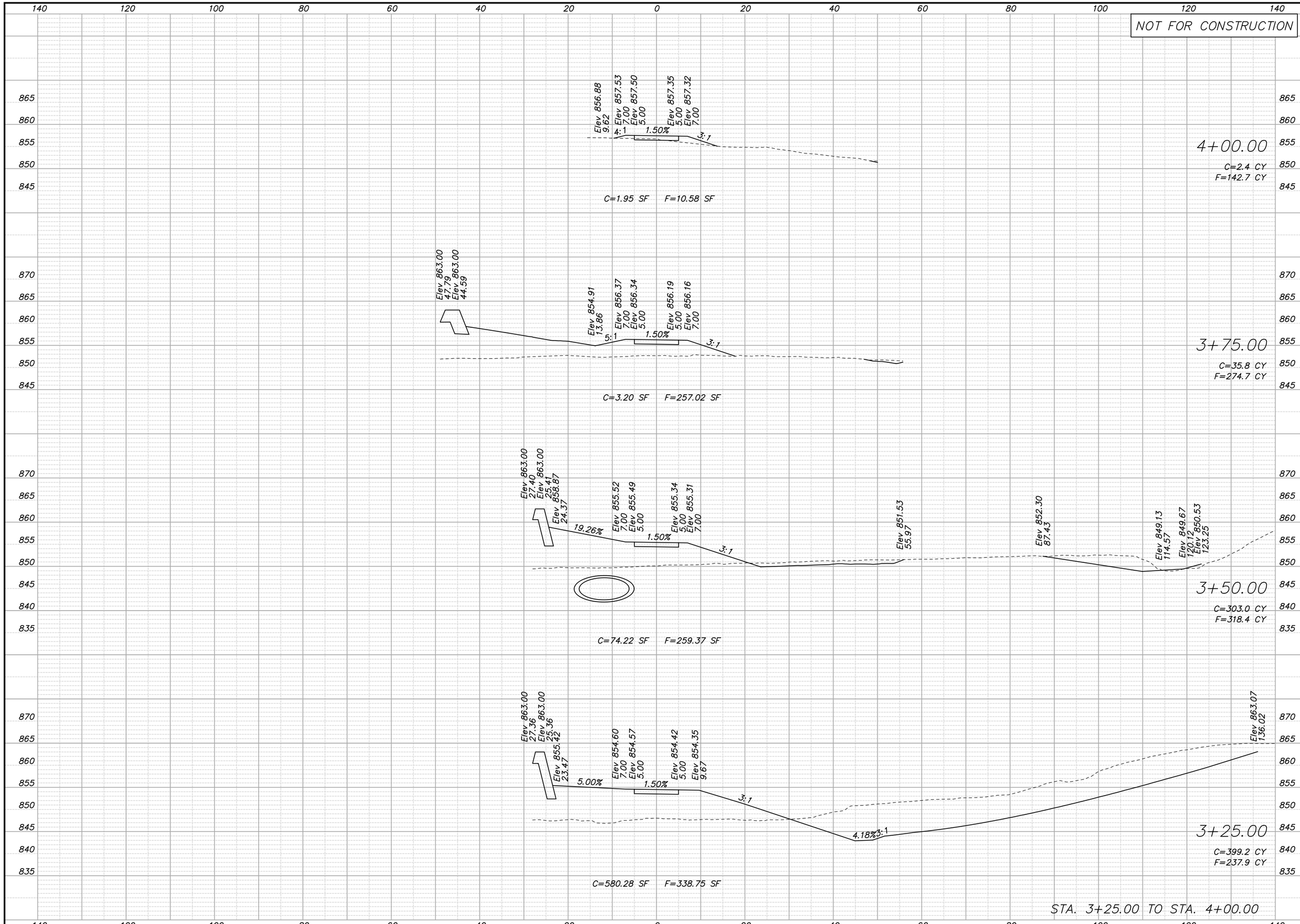

REV.	DATE	REVISIONS	BY	APP'D
5				
4				
3				
2				
1				

COPYRIGHT © -2016-SHAFER, KLINE & WARREN INC.

Designed By: PRP
Drawn By: JCK/JAA
Checked By: HDL
Issue Date: SEPT. 2016

SHAFER, KLINE & WARREN
11250 Corporate Avenue
Lenexa, KS 66219-1392
913.888.7800 FAX: 913.888.7868
SURVEYING | ENGINEERING | CONSTRUCTION

CLEAR CREEK PARKWAY
CITY OF SHAWNEE, KANSAS

CART PATH CROSS SECTIONS (3)

150561-010

SHEET NO.
175 OF 182

LAYOUT: MODEL | BY: jaadams | DATE: 20-SEP-2016 10:37:54 AM
L:\150561-010_Cad\Civil\Cross Sections Side Road 1\150561-010_XS-Cart-Path-Sheets.dgn

NOT FOR CONSTRUCTION

REV.	DATE	REVISIONS	BY	APP'D
5				
4				
3				
2				
1				

COPYRIGHT © -2016-SHAFER, KLINE & WARREN INC.

Designed By: PRP
Drawn By: JCK/JAA
Checked By: HDL
Issue Date: SEPT. 2016

SHAFER, KLINE & WARREN
11250 Corporate Avenue
Lenexa, KS 66219-1392
913.888.7800 FAX: 913.888.7868
SURVEYING | ENGINEERING | CONSTRUCTION

CLEAR CREEK PARKWAY
CITY OF SHAWNEE, KANSAS

CART PATH CROSS SECTIONS (4)

150561-010

LAYOUT: MODEL | BY: jadams | DATE: 20-SEP-2016 10:37:55 AM
L:\150561-010_Cad\Civil\Cross Sections Side Road 1\150561-010_XS-Cart-Path-Sheets.dgn

NOT FOR CONSTRUCTION

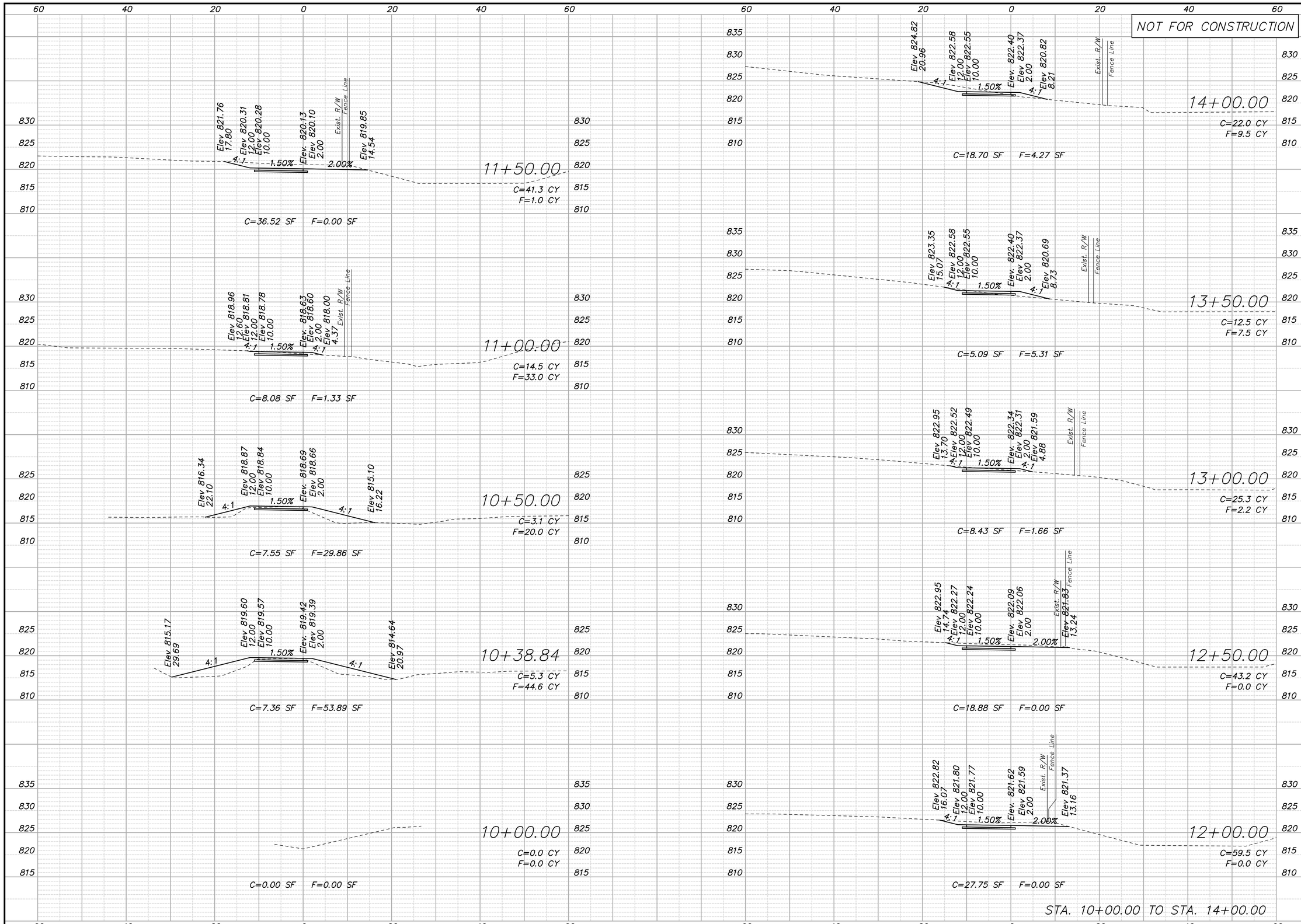

REV.	DATE	REVISIONS	BY	APP'D
5				
4				
3				
2				
1				

COPYRIGHT © -2016-SHAFER, KLINE & WARREN INC.

Designed By: PRP
Drawn By: JCK/JAA
Checked By: HDL
Issue Date: SEPT. 2016

SHAFER, KLINE & WARREN
11250 Corporate Avenue
Lenexa, KS 66219-1392
913.888.7800 FAX: 913.888.7868
SURVEYING | ENGINEERING | CONSTRUCTION

CLEAR CREEK PARKWAY
CITY OF SHAWNEE, KANSAS

TRAIL CONNECTION
CROSS SECTIONS (1)

150561-010

SHEET NO.
177 OF 182

LAYOUT: MODEL | BY: jadams | DATE: 20-SEP-2016 10:37:57 AM
L:\150561-010_Cad\Civil\Cross Sections Side Road 1\150561-010_XS-Trail-Connection-Sheets.dgn

NOT FOR CONSTRUCTION

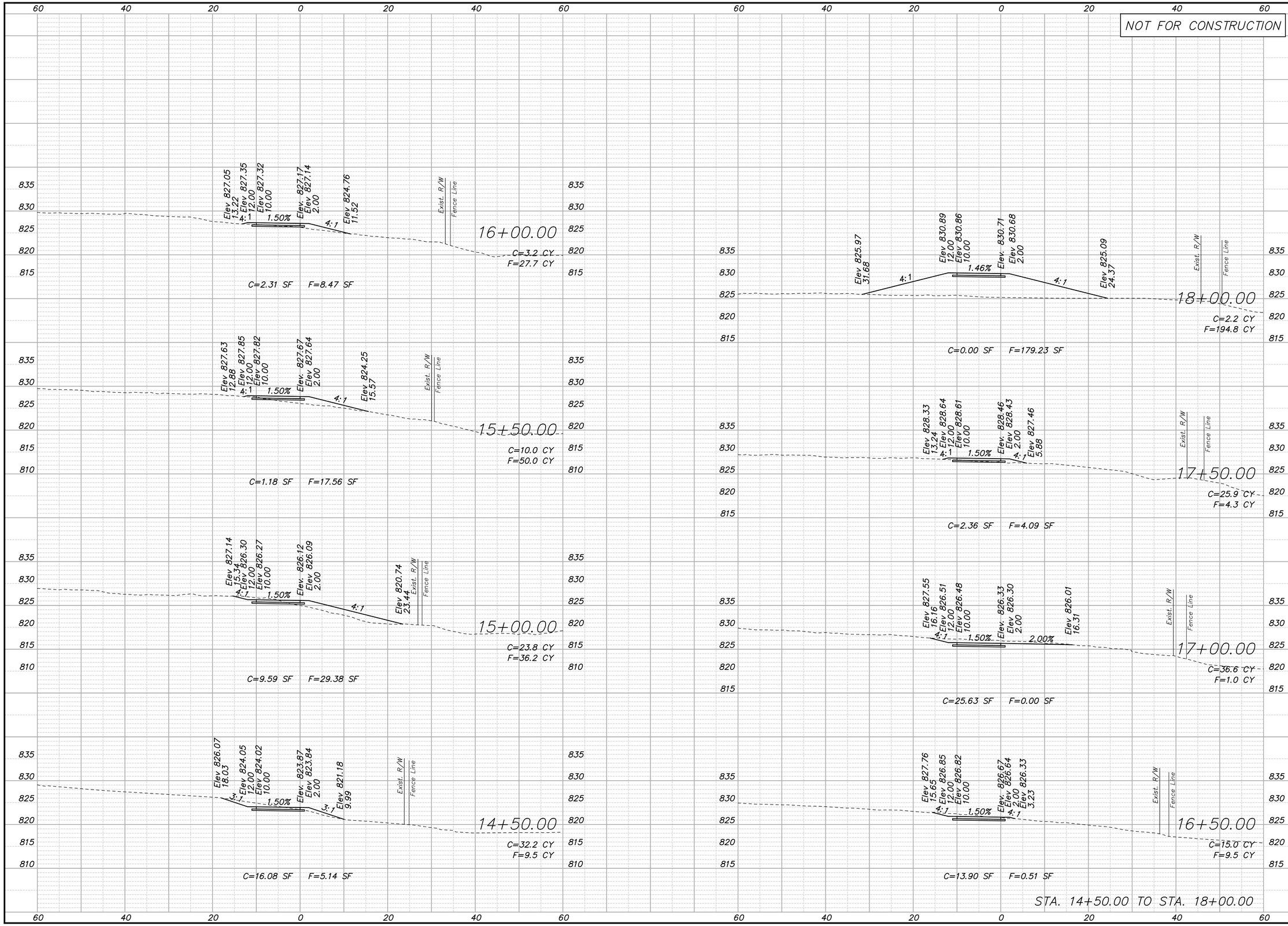

REV.	DATE	REVISIONS	BY	APP'D
5				
4				
3				
2				
1				

COPYRIGHT © -2016-SHAFER, KLINE & WARREN INC.

Designed By: PRP
Drawn By: JCK/JAA
Checked By: HDL
Issue Date: SEPT. 2016

SHAFER, KLINE & WARREN
11250 Corporate Avenue
Lenexa, KS 66219-1392
913.888.7800 FAX: 913.888.7868
SURVEYING | ENGINEERING | CONSTRUCTION

CLEAR CREEK PARKWAY
CITY OF SHAWNEE, KANSAS

TRAIL CONNECTION
CROSS SECTIONS (2)

150561-010

SHEET NO.
178 OF 182

LAYOUT: MODEL | BY: jadams | DATE: 20-SEP-2016 10:37:58 AM
L:\150561-010_Cad\Civil\Cross Sections Side Road 1\150561-010_XS-Trail-Connection-Sheets.dgn

NOT FOR CONSTRUCTION

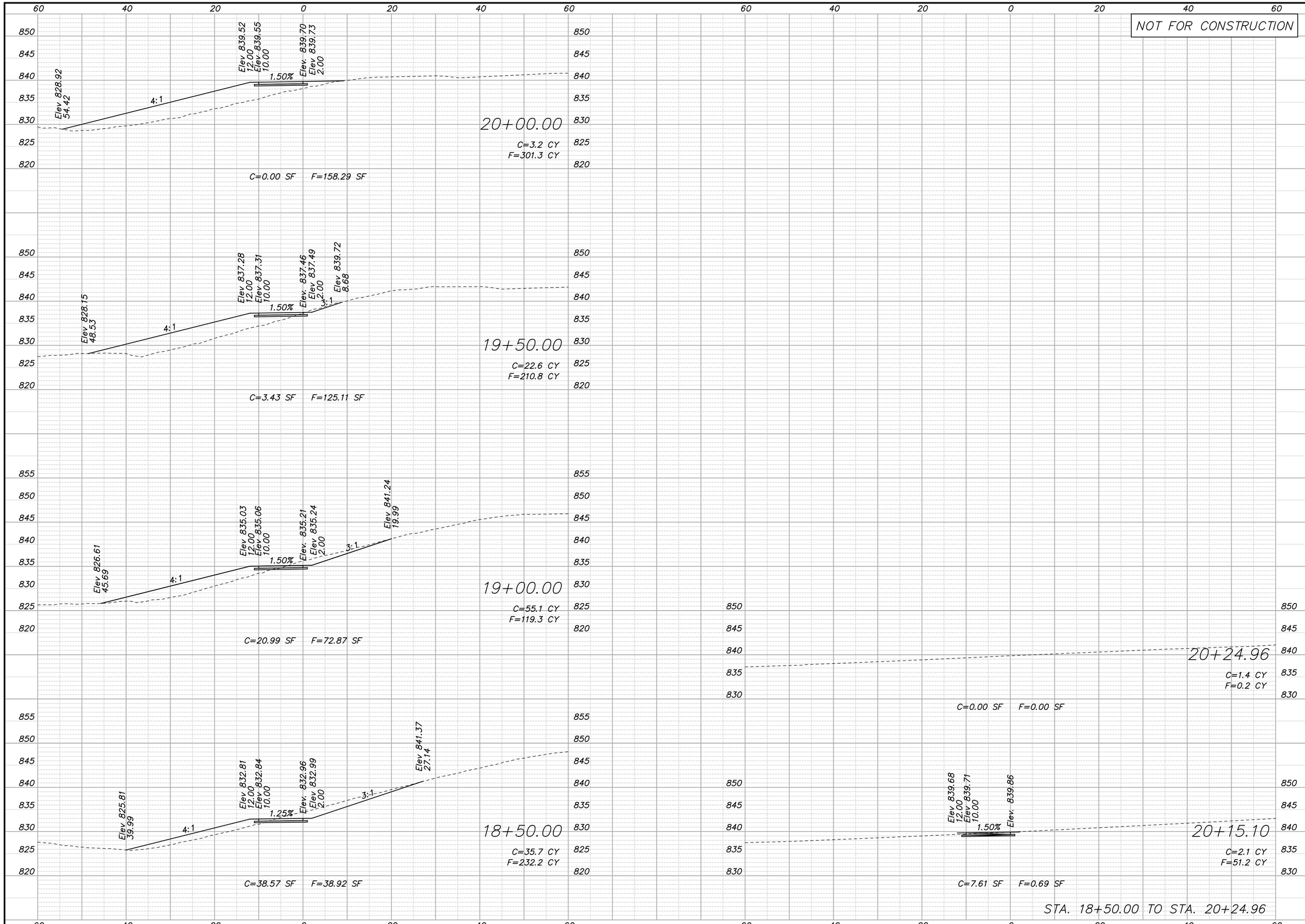

REV.	DATE	REVISIONS	BY	APP'D
5				
4				
3				
2				
1				

COPYRIGHT © -2016-SHAFER, KLINE & WARREN INC.

Designed By: PRP
Drawn By: JCK/JAA
Checked By: HDL
Issue Date: SEPT. 2016

SHAFER, KLINE & WARREN
11250 Corporate Avenue
Lenexa, KS 66219-1392
913.888.7800 FAX: 913.888.7868
SURVEYING | ENGINEERING | CONSTRUCTION

CLEAR CREEK PARKWAY
CITY OF SHAWNEE, KANSAS

TRAIL CONNECTION
CROSS SECTIONS (3)

150561-010

LAYOUT: MODEL | BY: jadams | DATE: 20-SEP-2016 10:37:59 AM
L:\150561-010_Cad\Civil\Cross Sections Side Road 1\150561-010_XS-Trail-Connection-Sheets.dgn

NOT FOR CONSTRUCTION

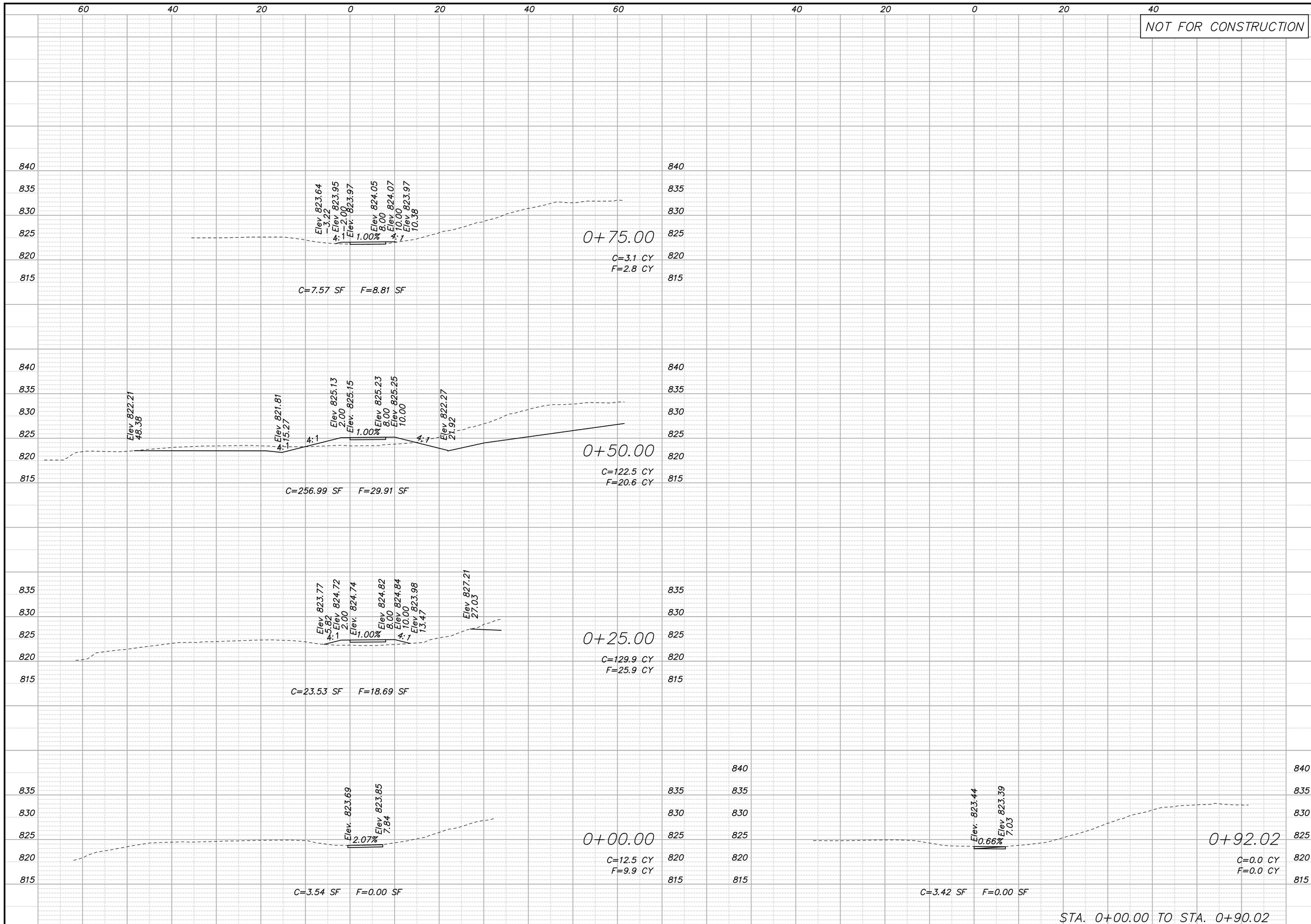

STA. 0+00.00 TO STA. 0+90.02

REV.	DATE	REVISIONS	BY	APP'D
1				
2				
3				
4				
5				

Designed By: PRP
Drawn By: JCK/JAA
Checked By: HDL
Issue Date: SEPT. 2016

COPYRIGHT © -2016-SHAFER, KLINE & WARREN INC.

SHAFER, KLINE & WARREN
11250 Corporate Avenue
Lenexa, KS 66219-1392
913.888.7800 FAX: 913.888.7868
SURVEYING | ENGINEERING | CONSTRUCTION

CLEAR CREEK PARKWAY
CITY OF SHAWNEE, KANSAS

CART PATH RECONSTRUCTION
CROSS SECTIONS

150561-010

SHEET NO.
180 OF 182

LAYOUT: MODEL | BY: jadams | DATE: 20-SEP-2016 10:38:01 AM
L:\150561-010_Cad\Civil\Cross Sections Side Road 1\150561-010_XS-Cart-Path-Reconstruction-Sects.dgn

NOT FOR CONSTRUCTION

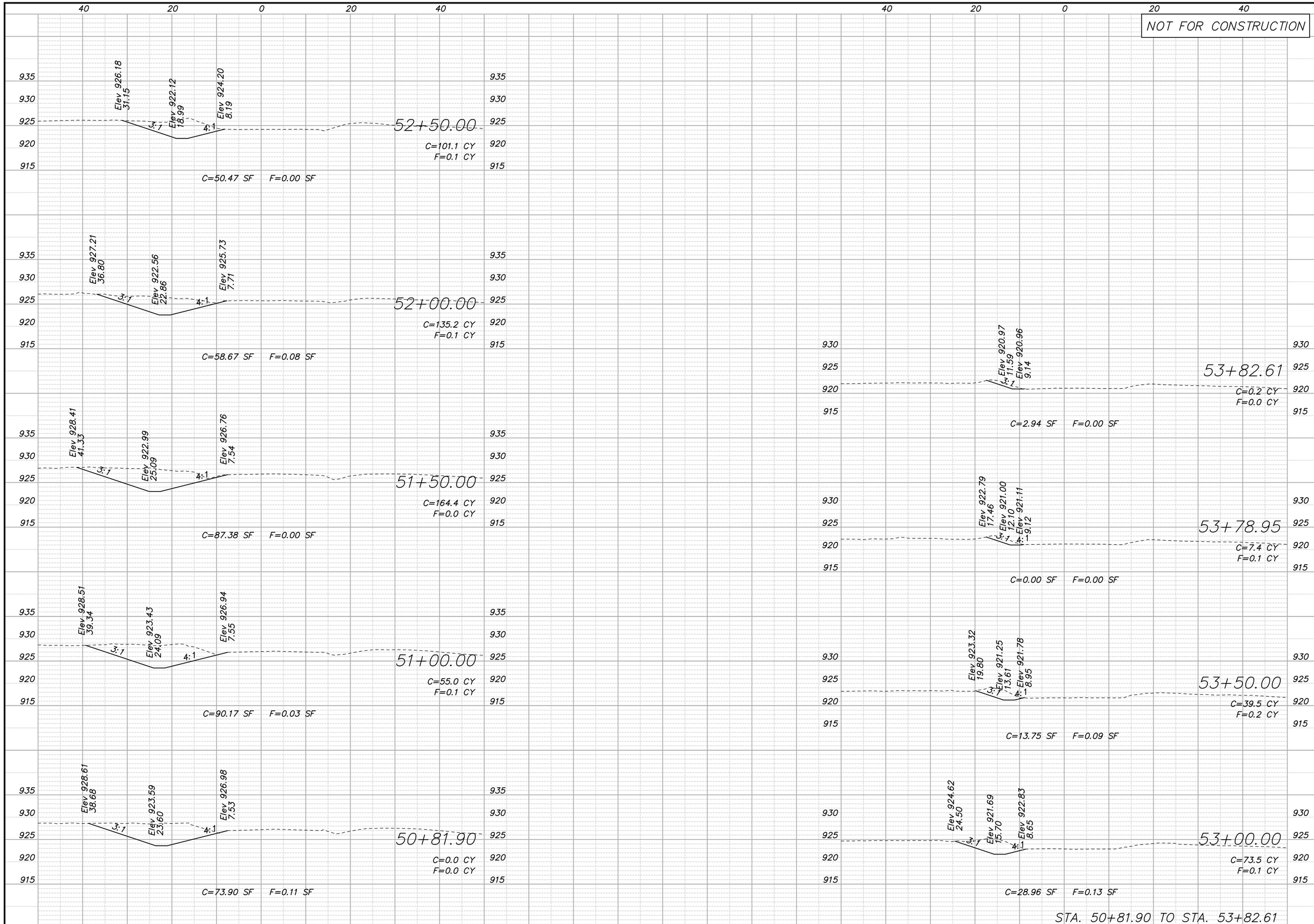

REV.	DATE	REVISIONS	BY	APP'D
1				
2				
3				
4				
5				

COPYRIGHT © -2016-SHAFER, KLINE & WARREN INC.

Designed By: PRP
Drawn By: JCK/JAA
Checked By: HDL
Issue Date: SEPT. 2016

SHAFER, KLINE & WARREN
11250 Corporate Avenue
Lenexa, KS 66219-1392
913.888.7800 FAX: 913.888.7868
SURVEYING | ENGINEERING | CONSTRUCTION

CLEAR CREEK PARKWAY
CITY OF SHAWNEE, KANSAS

SPECIAL DITCH ALONG CLARE ROAD
CROSS SECTIONS

150561-010

SHEET NO.
181 OF 182

LAYOUT: MODEL | BY: jadams | DATE: 20-SEP-2016 10:38:03 AM
L:\150561-010_Cad\Civil\Cross Sections Side Road 1\150561-010_XS-Clare-Road-Sheets.dgn

NOT FOR CONSTRUCTION

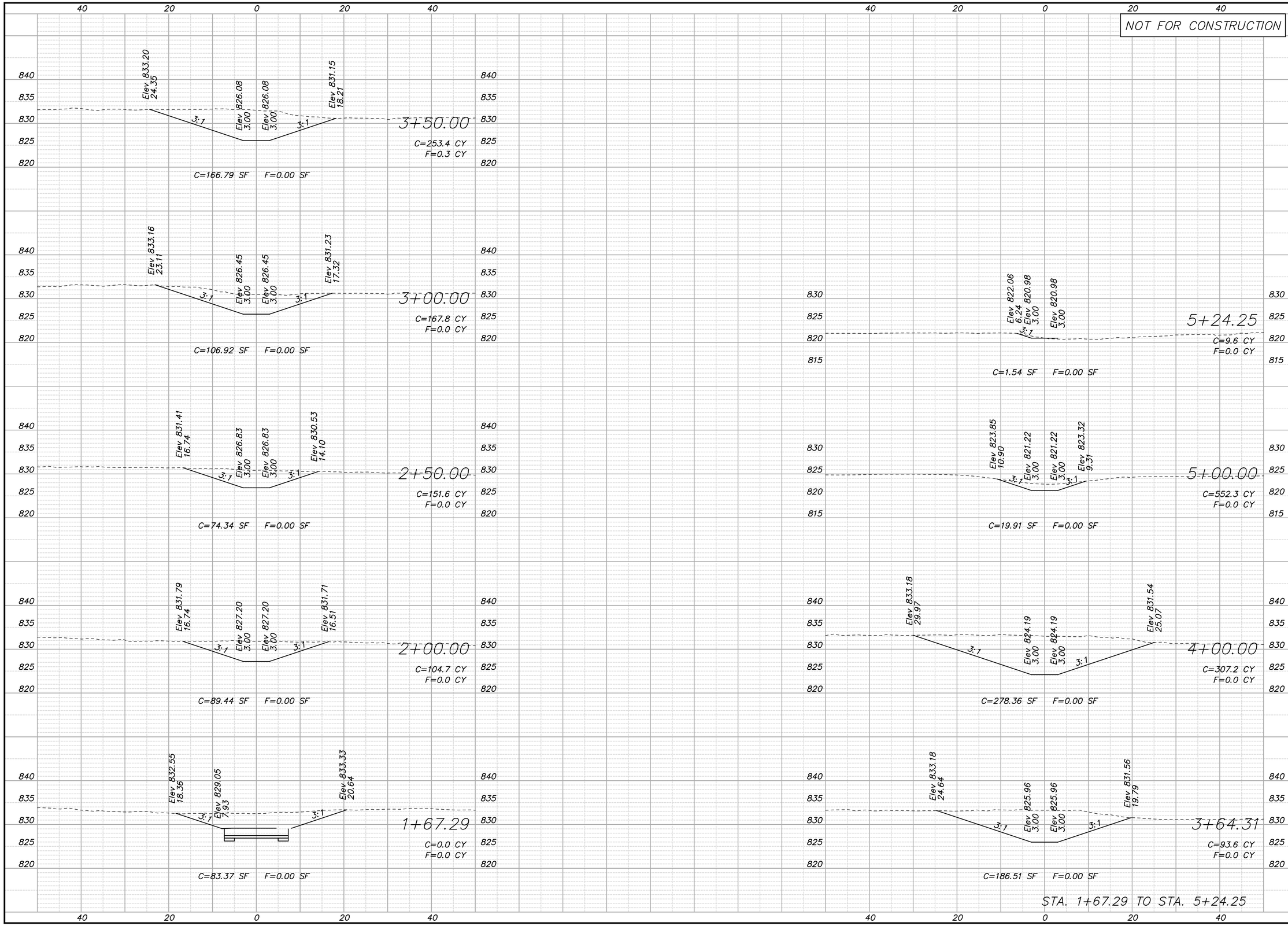

REV.	DATE	REVISIONS	BY	APP'D
1				
2				
3				
4				
5				

Designed By: PRP
Drawn By: JCK/JAA
Checked By: HDL
Issue Date: SEPT. 2016

COPYRIGHT © -2016-SHAFER, KLINE & WARREN INC.

SHAFER, KLINE & WARREN
11250 Corporate Avenue
Lenexa, KS 66219-1392
913.888.7800 FAX: 913.888.7868
SURVEYING | ENGINEERING | CONSTRUCTION

CLEAR CREEK PARKWAY
CITY OF SHAWNEE, KANSAS

SPECIAL DITCH TO GOLF COURSE
CROSS SECTIONS

150561-010

SHEET NO.
182 OF 182

LAYOUT: MODEL | BY: jadams | DATE: 20-SEP-2016 10:38:05 AM
L:\150561-010_Cad\Civil\Cross Sections Side Road 1\150561-010_XS-Ditch-To-Golf-Course-Sheets.dgn